Attachment F: 60kw PDU

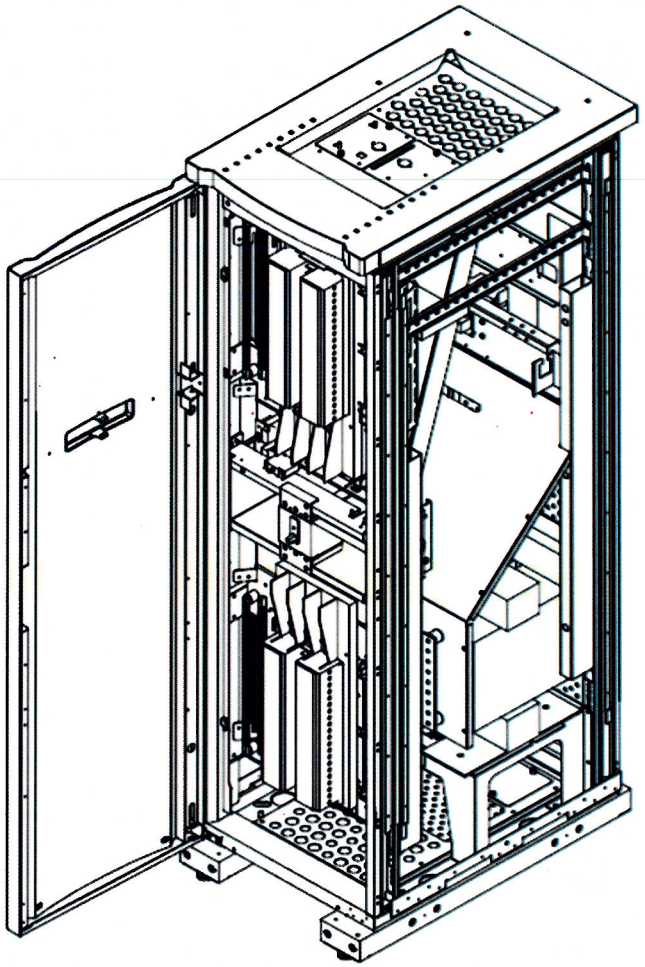

ISOMETRIC VIEW
INSIDE PANELS REMOVED

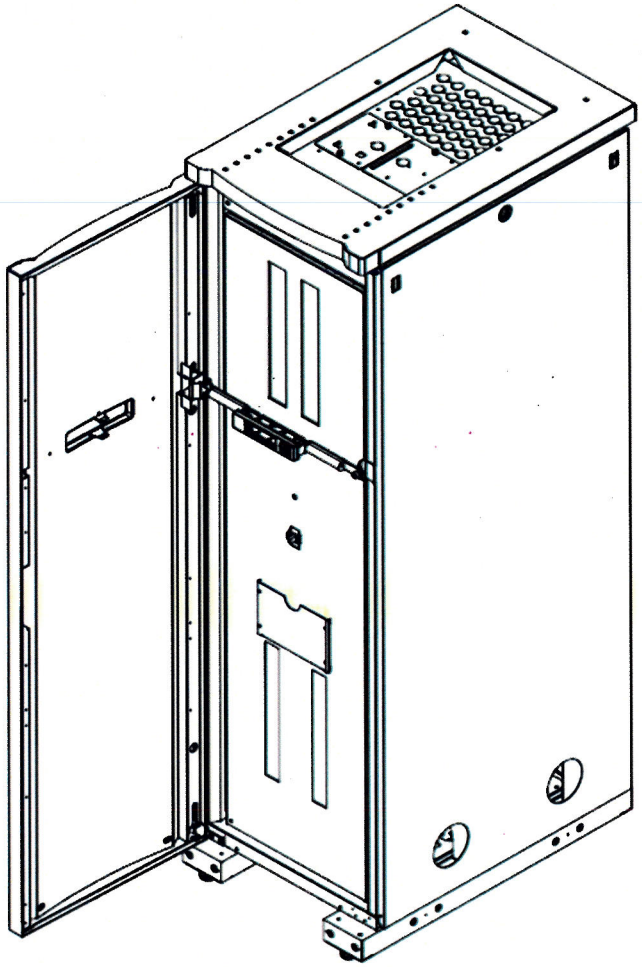

ISOMETRIC VIEW

TITLE: InfraStruXure 60kW
INPUT: 480V, 3PH, SINGLE FEE
OUTPUT: 208V, 60kW
PDU WITH TRANSFORMER
EPO INTERFACE
PROJECT: SUBMITAL DRAWINGS SHEET 10 O

THIS DRAWING AND SPECIFICATIONS HEREIN ARE THE PROPERTY OF AMERICAN POWER CONVERSION AND SHALL NOT BE COPIED, REPRODUCED OR USED IN WHOLE OR IN PART, AS THE BASIS FOR THE MANUFACTURE OR SALE OF ITEMS WITHOUT WRITTEN PERMISSION FROM APC. THIS DRAWING IS BASED UPON LATEST AVAILABLE INFORMATION AND IS SUBJECT TO CHANGE WITHOUT NOTICE.

TITLE:	InfraStruXure 60kW INPUT: 480V, 3PH, SINGLE FEED OUTPUT: 208V, 60kW PDU WITH TRANSFORMER ISOMETRIC VIEW	DWG NO: ISX-PD60GF-PD	REV. 3
		DRAWN BY: M.DRAWEN	10/28/05
		CHECKED BY: J.RING/ F.DIOSA	10/28/05
PROJECT: SUBMITAL DRAWINGS	SHEET 1 OF 11	ENGINEER: R.HANSEN/ E.SILVA	10/28/05

APC®
AMERICAN POWER CONVERSION
132 FAIRGROUNDS RD
WEST KINGSTON, RI 02892

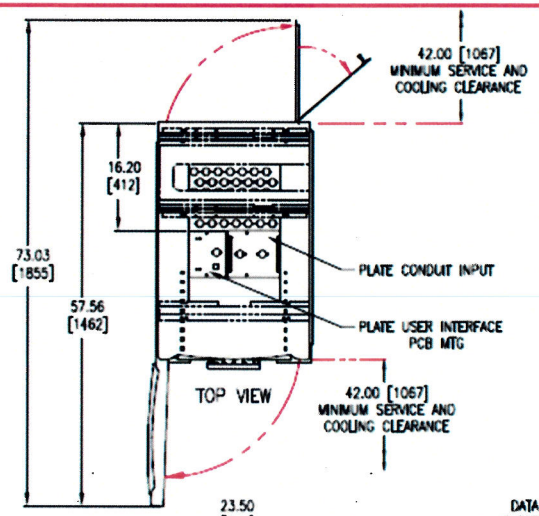

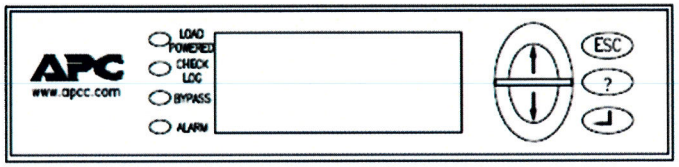

VIEW B
ENLARGED
CONTROL PANEL

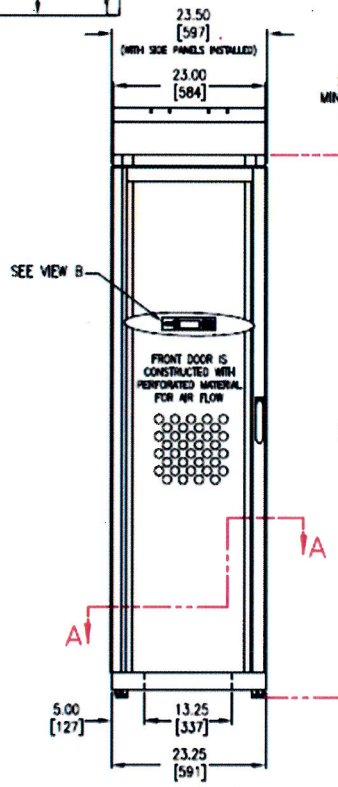

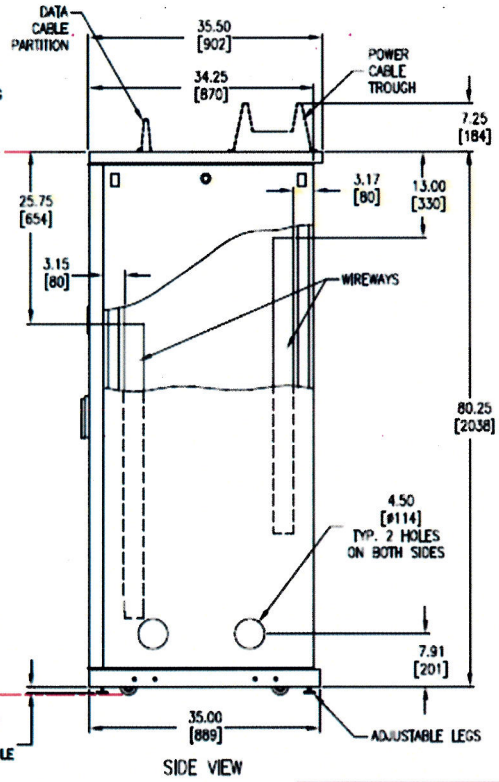

NOTES:

1. ALL DIMENSIONS ARE IN INCHES [MILLIMETERS].
2. CONDUIT ENTRY IS SIDE, TOP OR BOTTOM OF UNIT.
3. FRONT AND REAR ACCESS IS REQUIRED FOR SERVICE.
4. MAXIMUM WEIGHT OF UNIT IS 1225 LBS [557 kg].
5. DATA CABLE PARTITION AND POWER CABLE TROUGH ARE NOT PART OF THE SKU.
6. INSTALLATION MUST COMPLY WITH ALL APPLICABLE NATIONAL AND LOCAL CODES.

THIS DRAWING AND SPECIFICATIONS HEREIN ARE THE PROPERTY OF AMERICAN POWER CONVERSION AND SHALL NOT BE COPIED, REPRODUCED OR USED IN WHOLE OR IN PART, AS THE BASIS FOR THE MANUFACTURE OR SALE OF ITEMS WITHOUT WRITTEN PERMISSION FROM APC. THIS DRAWING IS BASED UPON LATEST AVAILABLE INFORMATION AND IS SUBJECT TO CHANGE WITHOUT NOTICE.

TITLE: InfraStruXure 60kW INPUT: 480V, 3PH, SINGLE FEED OUTPUT: 208V, 60kW PDU WITH TRANSFORMER MAIN MECHANICAL	DWG NO: ISX-PD60CF-MM1	REV 5	APC
	DRAWN BY: M.CRAWEN	10/28/05	AMERICAN POWER CONVERSION 132 FAIRGROUNDS RD WEST KINGSTON, RI 02892
	CHECKED BY: J.RING/ F.DIOSA	10/28/05	
PROJECT: SUBMITTAL DRAWINGS SHEET 2 OF 11	ENGINEER: R.HANSEN/ E.SILVA	10/28/05	

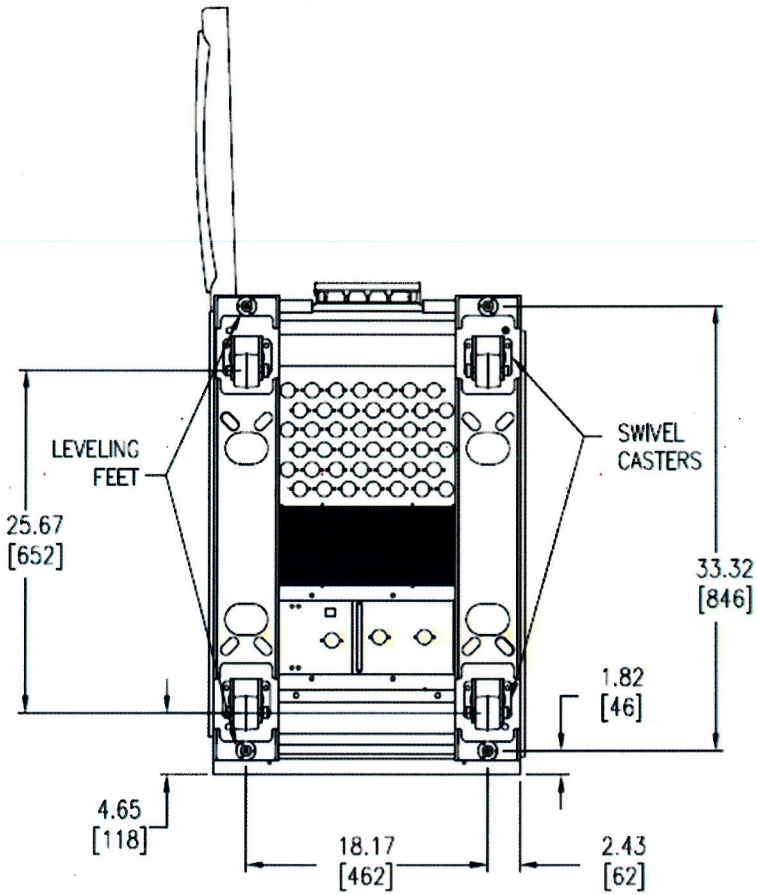

BOTTOM VIEW

(ENLARGED)

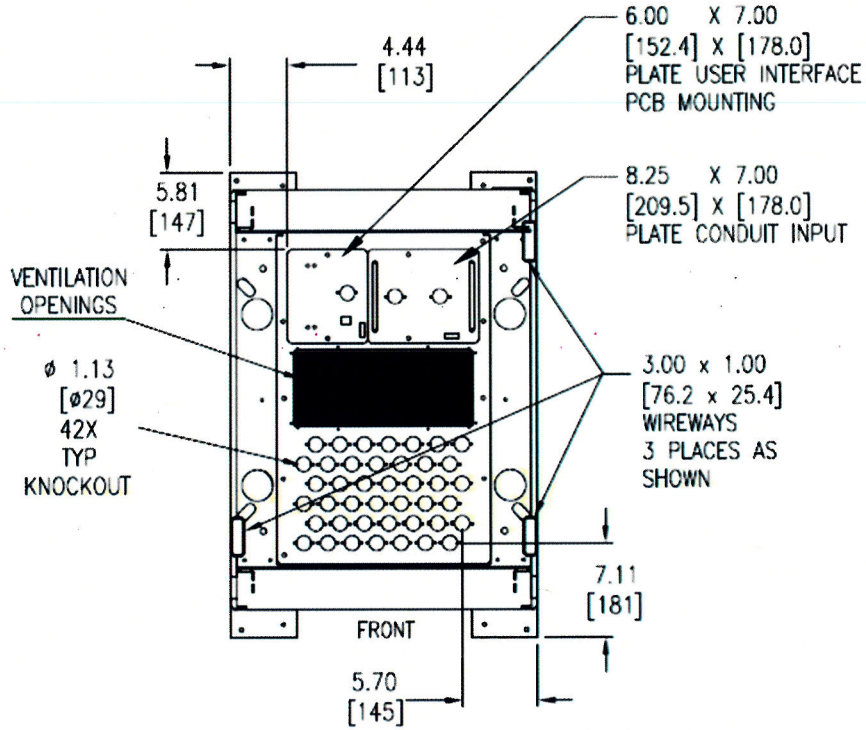

SECTION A–A

(ENLARGED)

NOTES:

1. ALL DIMENSIONS ARE IN INCHES [MILLIMETERS].
2. INSTALLATION MUST COMPLY WITH ALL APPLICABLE NATIONAL AND LOCAL CODES.

THIS DRAWING AND SPECIFICATIONS HEREIN ARE THE PROPERTY OF AMERICAN POWER CONVERSION AND SHALL NOT BE COPIED, REPRODUCED OR USED IN WHOLE OR IN PART, AS THE BASIS FOR THE MANUFACTURE OR SALE OF ITEMS WITHOUT WRITTEN PERMISSION FROM APC. THIS DRAWING IS BASED UPON LATEST AVAILABLE INFORMATION AND IS SUBJECT TO CHANGE WITHOUT NOTICE.

TITLE: InfraStruXure 60kW INPUT: 480V, 3PH, SINGLE FEED OUTPUT: 208V, 60kW PDU WITH TRANSFORMER BOTTOM & SECTION VIEWS	DWG NO: ISX-PD60GF-MM2	REV. 2	
	DRAWN BY: M.CRAWEN	10/28/05	
	CHECKED BY: J.RING/ F.DOSA	10/28/05	
PROJECT: SUBMITTAL DRAWINGS SHEET 3 OF 11	ENGINEER: R.HANSEN/ E.SILVA	10/28/05	

APC®
AMERICAN POWER CONVERSION
132 FAIRGROUNDS RD
WEST KINGSTON, RI 02892

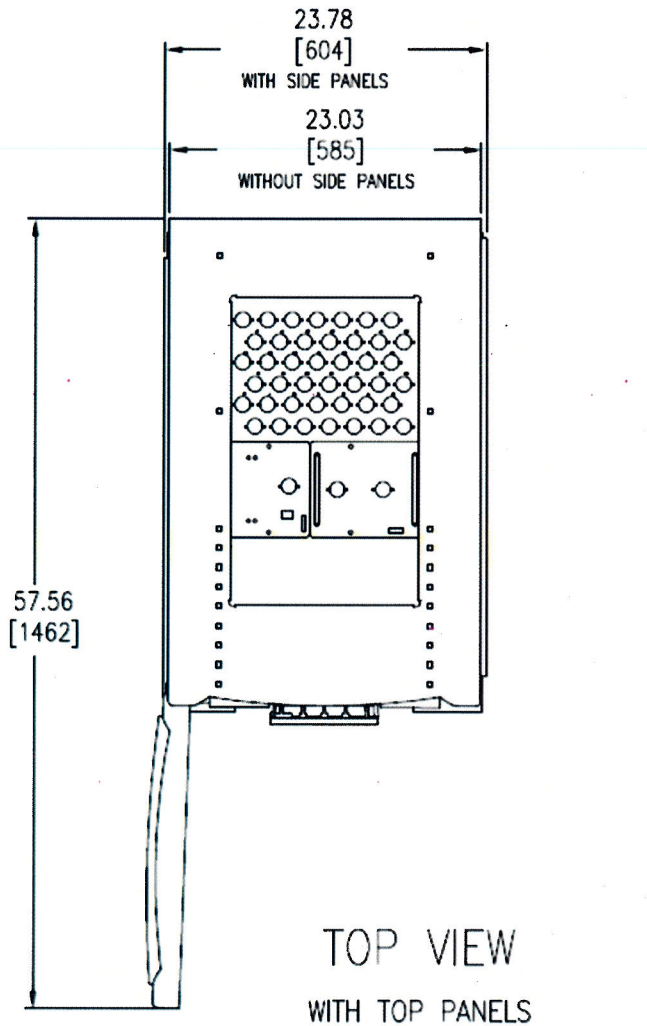

TOP VIEW

WITH TOP PANELS

TROUGH AND PARTITIONS REMOVED

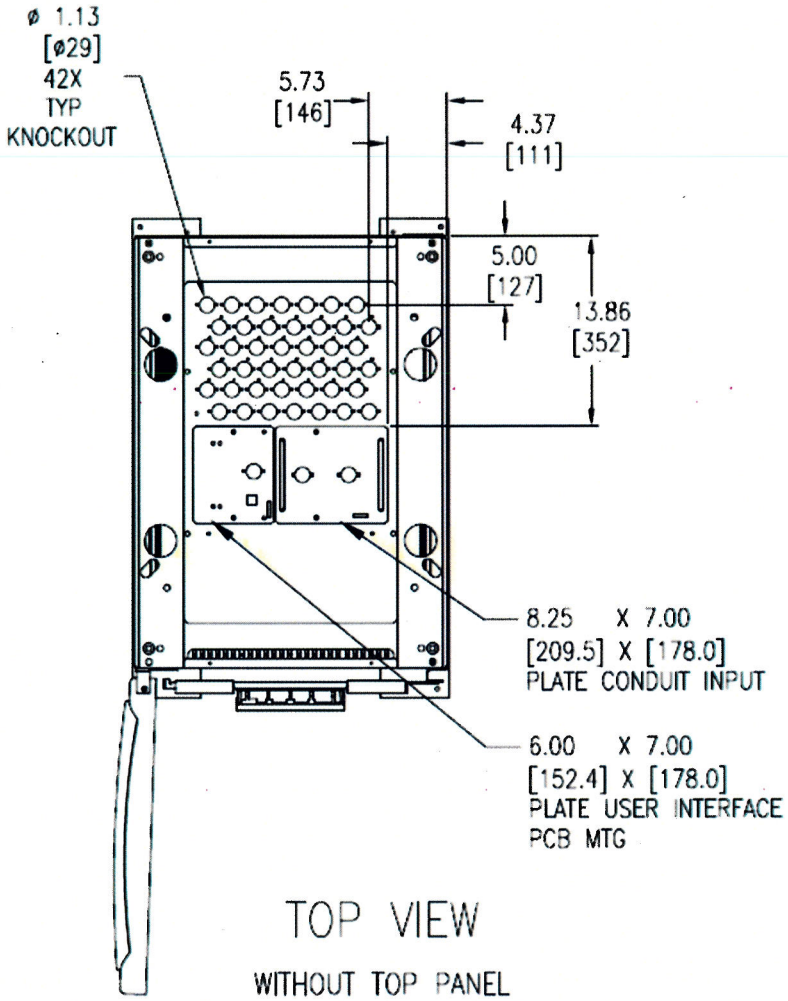

TOP VIEW

WITHOUT TOP PANEL

NOTES:

1. ALL DIMENSIONS ARE IN INCHES [MILLIMETERS].
2. INSTALLATION MUST COMPLY WITH ALL APPLICABLE NATIONAL AND LOCAL CODES.

THIS DRAWING AND SPECIFICATIONS HEREIN ARE THE PROPERTY OF AMERICAN POWER CONVERSION AND SHALL NOT BE COPIED, REPRODUCED OR USED IN WHOLE OR IN PART, AS THE BASIS FOR THE MANUFACTURE OR SALE OF ITEMS WITHOUT WRITTEN PERMISSION FROM APC. THIS DRAWING IS BASED UPON LATEST AVAILABLE INFORMATION AND IS SUBJECT TO CHANGE WITHOUT NOTICE.

TITLE:	InfraStruXure 60kW INPUT: 480V, 3PH, SINGLE FEED OUTPUT: 208V, 60kW PDU WITH TRANSFORMER TOP VIEWS	DWG NO: ISX-PD60CF-MM3	REV. 2
		DRAWN BY: M.CRAMER	10/28/05
		CHECKED BY: J.RING/ F.SIROSA	10/28/05
PROJECT: SUBMITTAL DRAWINGS	SHEET 4 OF 11	ENGINEER: R.HANSEN/ E.SILVA	10/28/05

APC®
AMERICAN POWER CONVERSION
132 FAIRGROUNDS RD
WEST KINGSTON, RI 02892

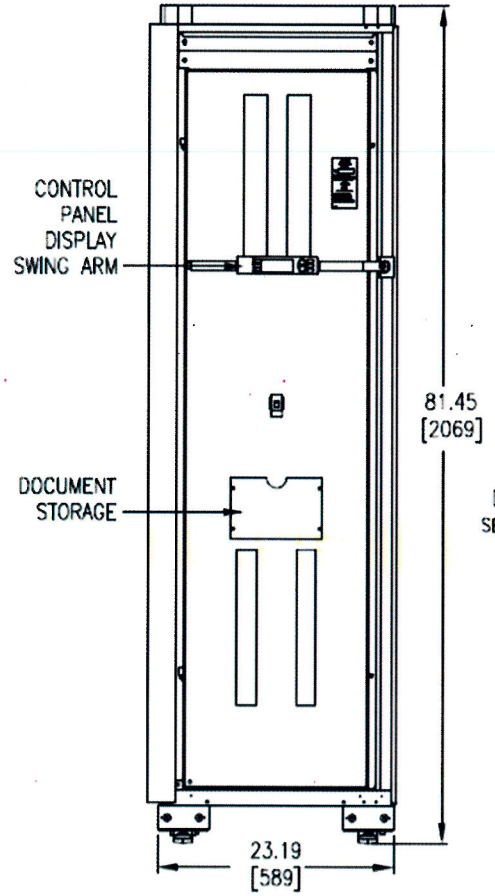

FRONT VIEW

FRONT DOOR OPENED

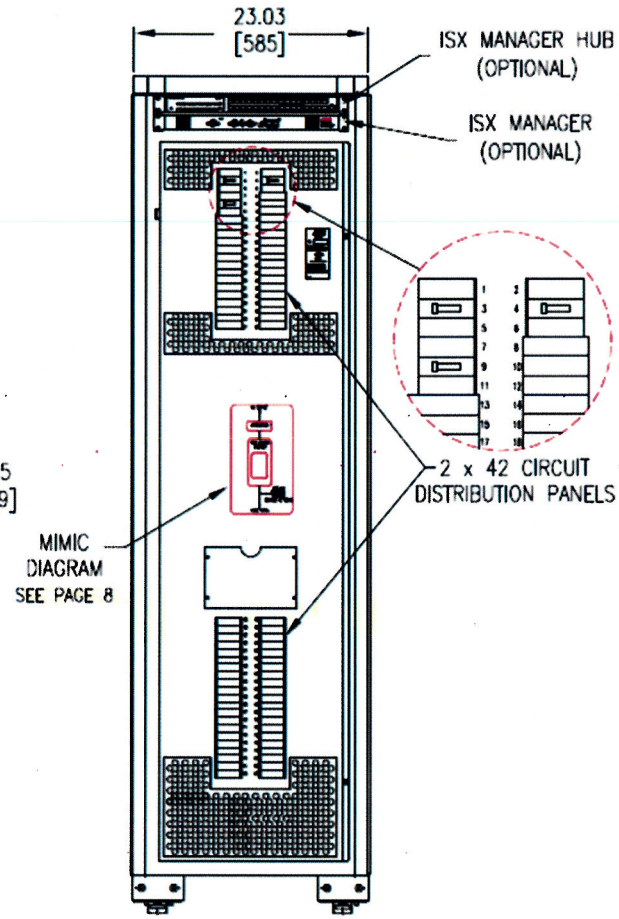

FRONT VIEW

FRONT DOOR REMOVED

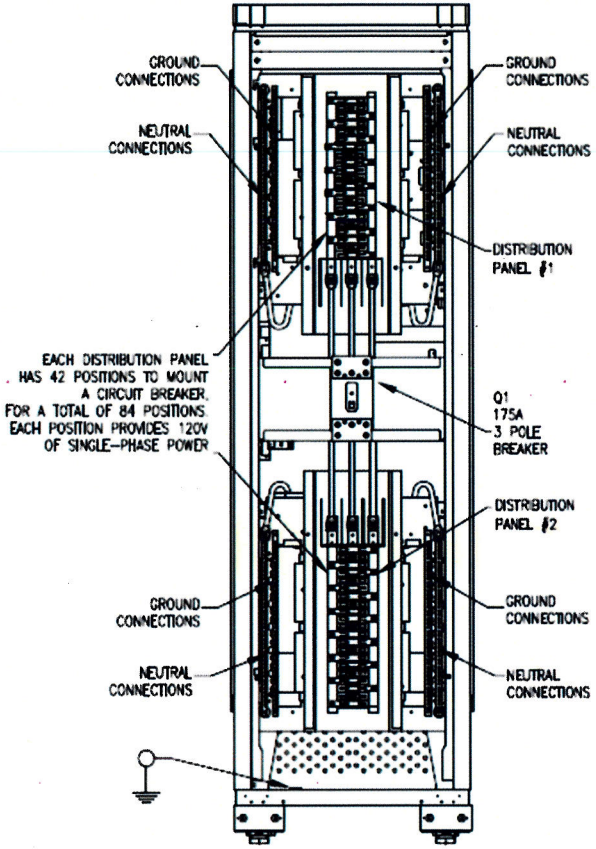

FRONT VIEW

DOOR AND

DEAD FRONT PANEL REMOVED

NOTES:

1. ALL DIMENSIONS ARE IN INCHES [MILLIMETERS].
2. INSTALLATION MUST COMPLY WITH ALL APPLICABLE NATIONAL AND LOCAL CODES.

THIS DRAWING AND SPECIFICATIONS HEREIN ARE THE PROPERTY OF AMERICAN POWER CONVERSION AND SHALL NOT BE COPIED, REPRODUCED OR USED IN WHOLE OR IN PART, AS THE BASIS FOR THE MANUFACTURE OR SALE OF ITEMS WITHOUT WRITTEN PERMISSION FROM APC. THIS DRAWING IS BASED UPON LATEST AVAILABLE INFORMATION AND IS SUBJECT TO CHANGE WITHOUT NOTICE.

TITLE: InfraStruXure 60kW INPUT: 480V, 3PH, SINGLE FEED OUTPUT: 208V, 60kW POU WITH TRANSFORMER FRONT VIEWS	DWG NO: ISX-PD60GF-MM4	REV. 5	
	DRAWN BY: M.CRAWEN	10/28/05	
	CHECKED BY: J.RING/ F.DIOSA	10/28/05	
PROJECT: SUBMITTAL DRAWINGS / SHEET 5 OF 11	ENGINEER: R.HANSEN/ E.SILVA	10/28/05	

APC
AMERICAN POWER CONVERSION
132 FAIRGROUNDS RD
WEST KINGSTON, RI 02892

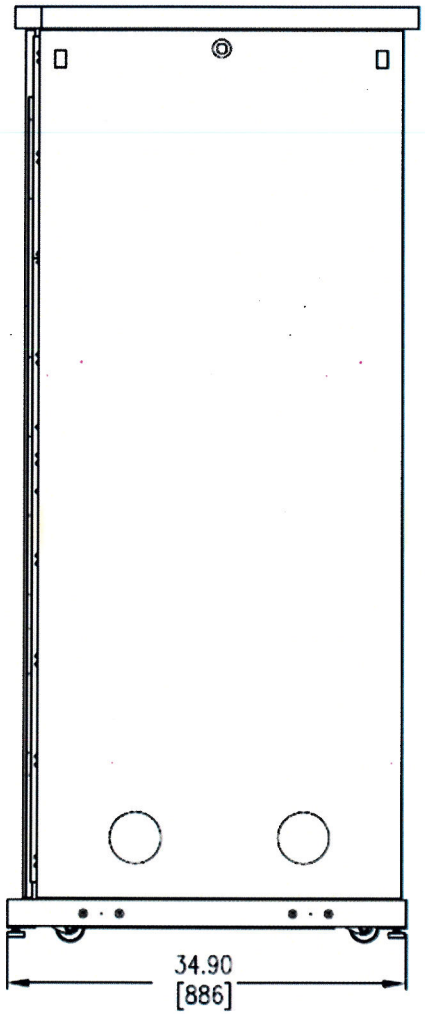

SIDE VIEW

WITH SIDE PANELS

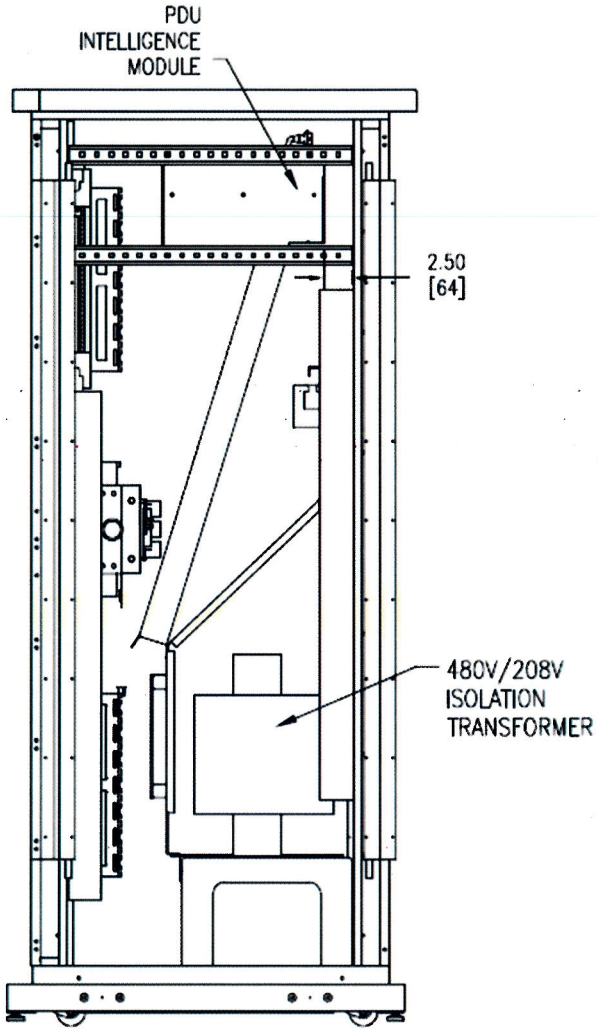

SIDE VIEW

SIDE PANELS REMOVED

NOTES:

1. ALL DIMENSIONS ARE IN INCHES [MILLIMETERS].
2. INSTALLATION MUST COMPLY WITH ALL APPLICABLE NATIONAL AND LOCAL CODES.

THIS DRAWING AND SPECIFICATIONS HEREIN ARE THE PROPERTY OF AMERICAN POWER CONVERSION AND SHALL NOT BE COPIED, REPRODUCED OR USED IN WHOLE OR IN PART, AS THE BASIS FOR THE MANUFACTURE OR SALE OF ITEMS WITHOUT WRITTEN PERMISSION FROM APC. THIS DRAWING IS BASED UPON LATEST AVAILABLE INFORMATION AND IS SUBJECT TO CHANGE WITHOUT NOTICE.

TITLE:	InfraStruXure 60kW INPUT: 480V, 3PH, SINGLE FEED OUTPUT: 208V, 60kW PDU WITH TRANSFORMER SIDE VIEWS	DWG NO:	ISX-PD60GF-MM5
		REV:	2
		DRAWN BY:	M.CRAWEN 10/28/05
		CHECKED BY:	J.RING/ F.DOSA 10/28/05
PROJECT:	SUBMITTAL DRAWINGS	SHEET:	6 OF 11
		ENGINEER:	R.HANSEN/ E.SILVA 10/28/05

APC®
AMERICAN POWER CONVERSION
132 FAIRGROUNDS RD
WEST KINGSTON, RI 02892

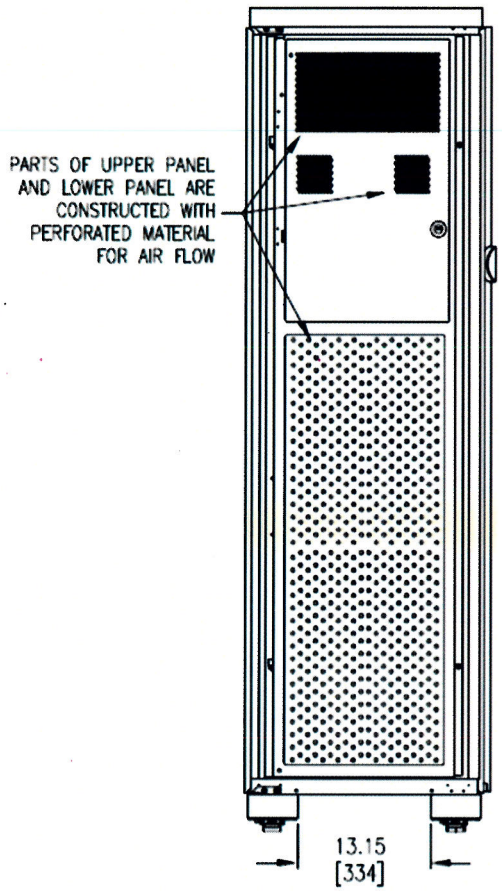

REAR VIEW

REAR DOORS REMOVED

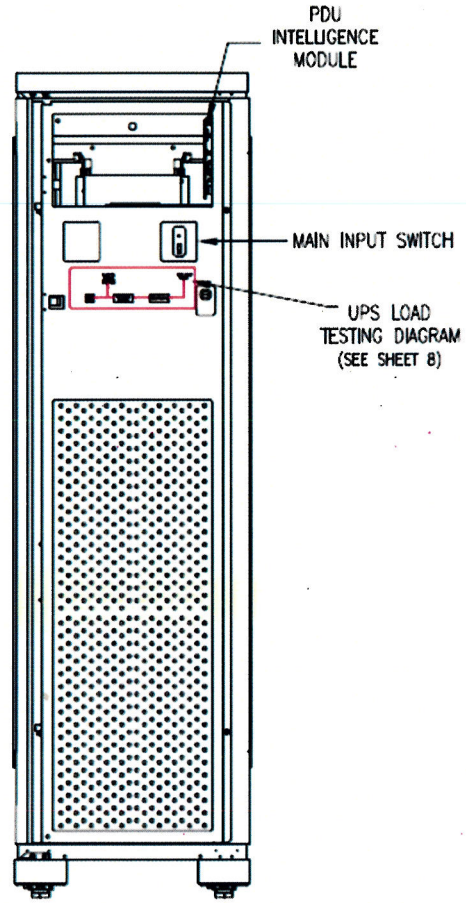

REAR VIEW

TOP DOOR REMOVED

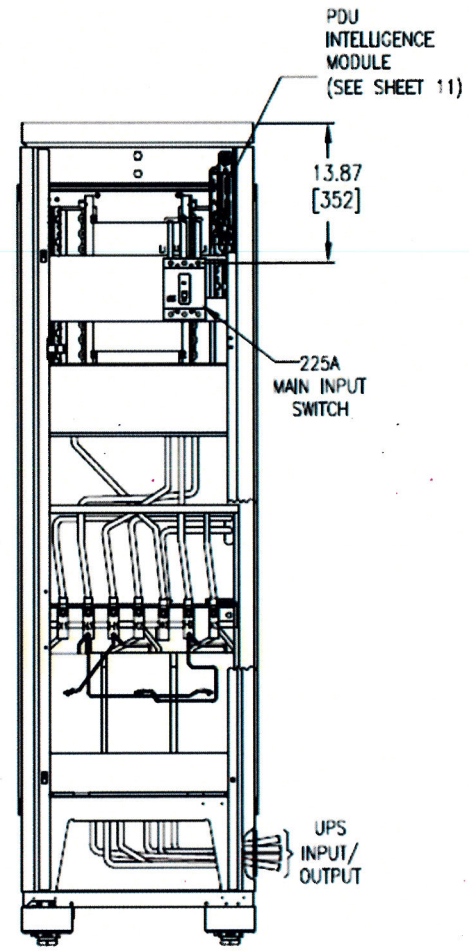

REAR VIEW

PANELS & DOORS REMOVED

NOTES:

1. ALL DIMENSIONS ARE IN INCHES [MILLIMETERS].
2. INSTALLATION MUST COMPLY WITH ALL APPLICABLE NATIONAL AND LOCAL CODES.

THIS DRAWING AND SPECIFICATIONS HEREIN ARE THE PROPERTY OF AMERICAN POWER CONVERSION AND SHALL NOT BE COPIED, REPRODUCED OR USED IN WHOLE OR IN PART, AS THE BASIS FOR THE MANUFACTURE OR SALE OF ITEMS WITHOUT WRITTEN PERMISSION FROM APC. THIS DRAWING IS BASED UPON LATEST AVAILABLE INFORMATION AND IS SUBJECT TO CHANGE WITHOUT NOTICE.

TITLE:	InfraStruXure 60kW INPUT: 480V, 3PH, SINGLE FEED OUTPUT: 208V, 60KW PDU WITH TRANSFORMER REAR VIEWS	DWG NO: ISX-PD60GF-MM6	REV 2
		DRAWN BY: M.CRAVEN	10/28/05
		CHECKED BY: J.RING/ F.3105A	10/28/05
PROJECT: SUBMITTAL DRAWINGS	SHEET 7 OF 11	ENGINEER: R.HANSEN/ E.SILVA	10/28/05

APC

AMERICAN POWER CONVERSION
132 FAIRGROUNDS RD
WEST KINGSTON, RI 02892

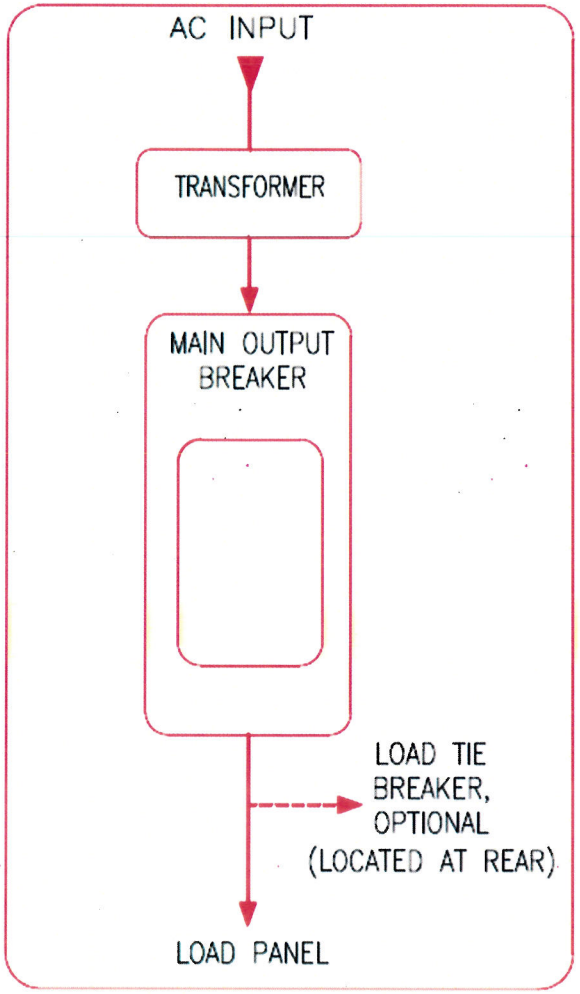

MIMIC DIAGRAM

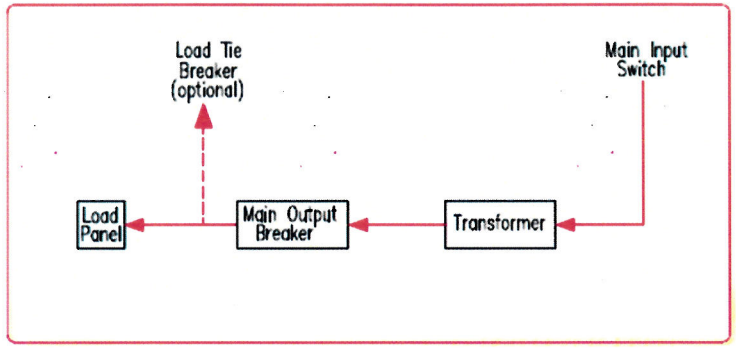

INTERNAL MIMIC DIAGRAM

THIS DRAWING AND SPECIFICATIONS HEREIN ARE THE PROPERTY OF AMERICAN POWER CONVERSION AND SHALL NOT BE COPIED, REPRODUCED OR USED IN WHOLE OR IN PART, AS THE BASIS FOR THE MANUFACTURE OR SALE OF ITEMS WITHOUT WRITTEN PERMISSION FROM APC. THIS DRAWING IS BASED UPON LATEST AVAILABLE INFORMATION AND IS SUBJECT TO CHANGE WITHOUT NOTICE.

TITLE:	InfraStruXure 60kW INPUT: 480V, 3PH, SINGLE FEED OUTPUT: 208V, 60kW PDU WITH TRANSFORMER MIMIC DIAGRAMS
PROJECT:	SUBMITTAL DRAWINGS
SHEET	8 OF 11
DWG NO:	ISX-PD60GF-ME1
REV	5
DRAWN BY:	M.CRAMER 10/28/05
CHECKED BY:	J.RING/ F.DIOSA 10/28/05
ENGINEER:	R.HANSEN/ E.SILVA 10/28/05

AMERICAN POWER CONVERSION
132 FAIRGROUNDS RD
WEST KINGSTON, RI 02892

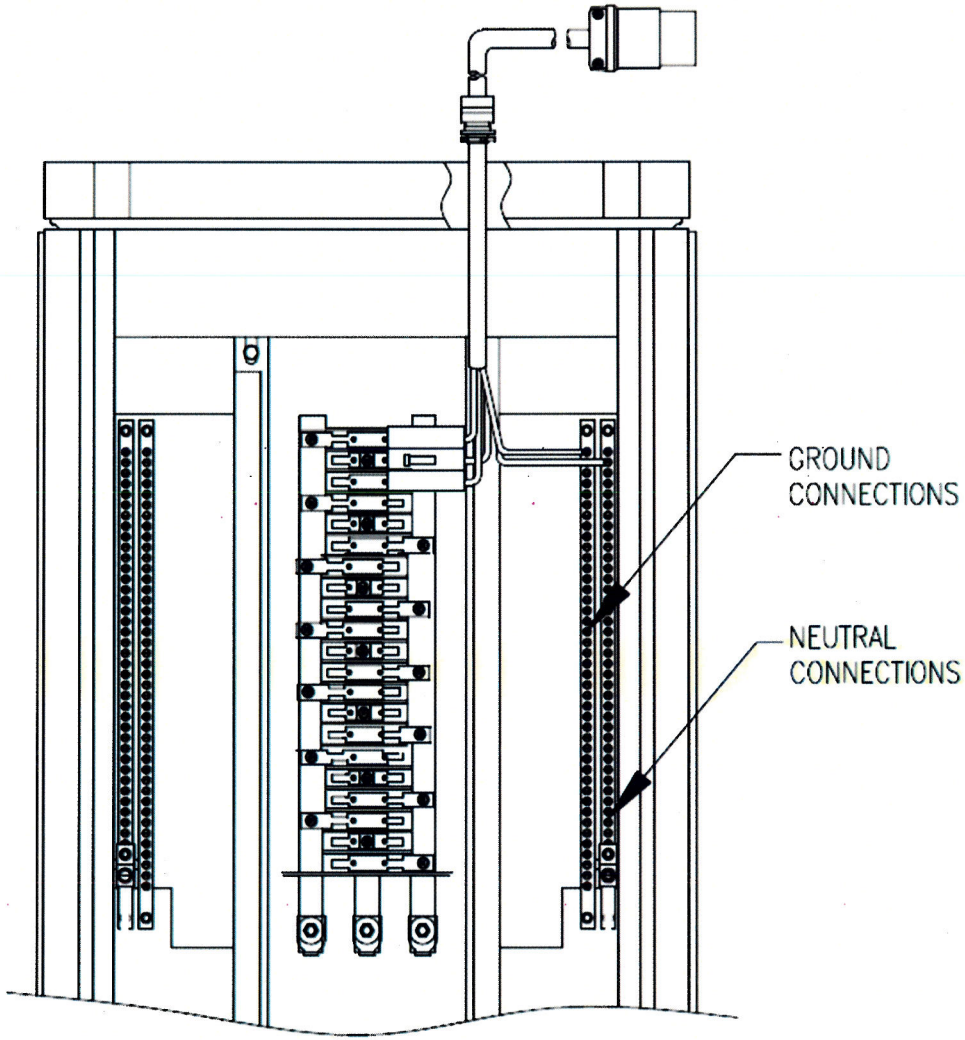

TYPICAL BREAKER CONNECTION
(ENLARGED VIEW)

NOTES:

1. CABLE CONNECTIONS SHOWN FOR REFERENCE ONLY.
2. INSTALLATION MUST COMPLY WITH ALL APPLICABLE NATIONAL AND LOCAL CODES.

THIS DRAWING AND SPECIFICATIONS HEREIN ARE THE PROPERTY OF AMERICAN POWER CONVERSION AND SHALL NOT BE COPIED, REPRODUCED OR USED IN WHOLE OR IN PART, AS THE BASIS FOR THE MANUFACTURE OR SALE OF ITEMS WITHOUT WRITTEN PERMISSION FROM APC. THIS DRAWING IS BASED UPON LATEST AVAILABLE INFORMATION AND IS SUBJECT TO CHANGE WITHOUT NOTICE.

TITLE:	InfraStruXure 60kW INPUT: 480V, 3PH, SINGLE FEED OUTPUT: 208V, 60kW PDU WITH TRANSFORMER TYPICAL BREAKER CONNECTION	DWG NO: ISX-PD60GF-ME2	REV. 5
		DRAWN BY: M.CRAWEN	10/28/05
		CHECKED BY: J.RING/ F.SIOSA	10/28/05
PROJECT: SUBMITTAL DRAWINGS	SHEET 9 OF 11	ENGINEER: R.HANSEN/ E.SILVA	10/28/05

APC®
AMERICAN POWER CONVERSION
132 FAIRGROUNDS RD
WEST KINGSTON, RI 02892

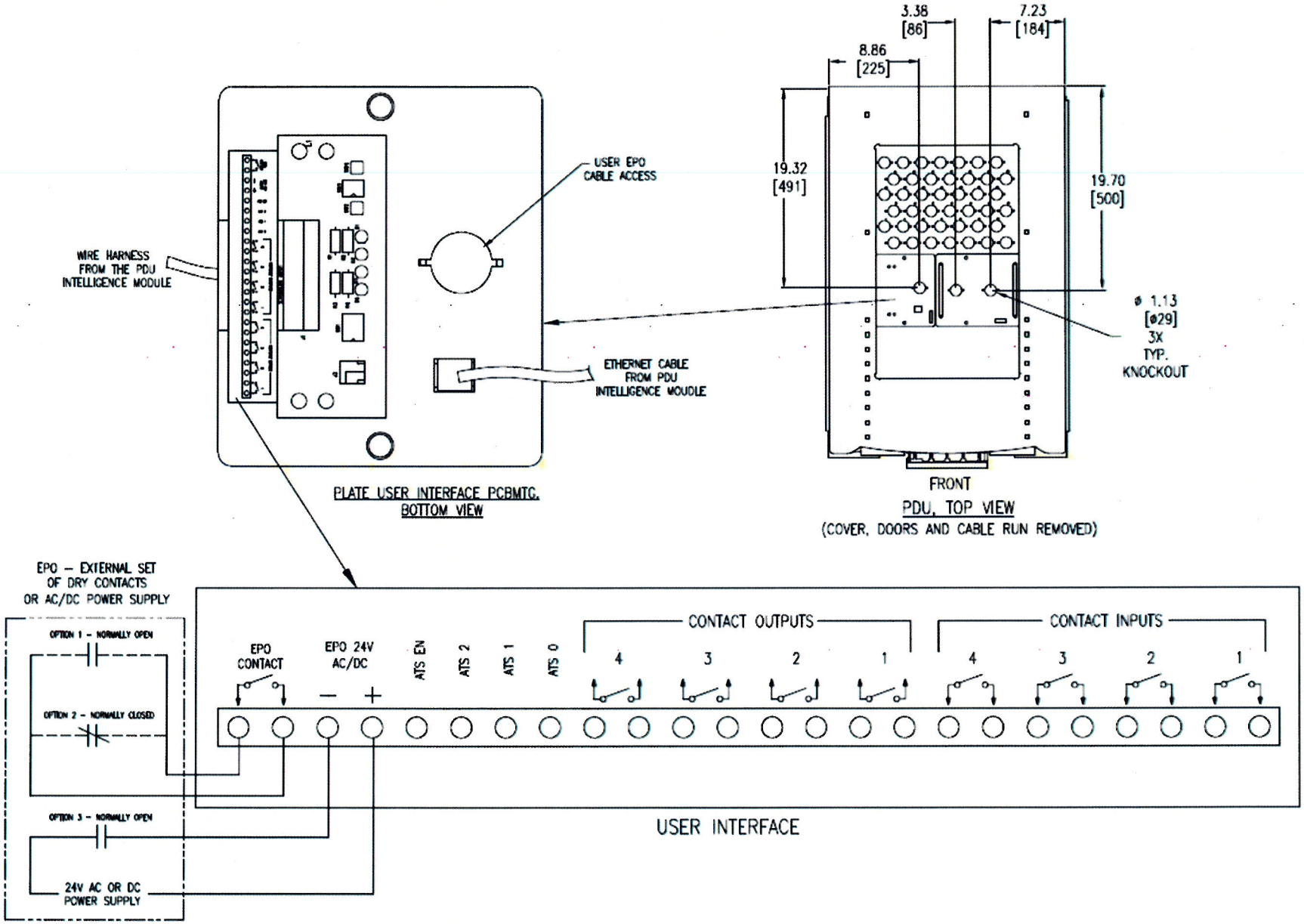

NOTES:

1. ALL DIMENSIONS ARE IN INCHES [MILLIMETERS].
2. INSTALLATION MUST COMPLY WITH ALL APPLICABLE NATIONAL AND LOCAL CODES.

THIS DRAWING AND SPECIFICATIONS HEREIN ARE THE PROPERTY OF AMERICAN POWER CONVERSION AND SHALL NOT BE COPIED, REPRODUCED OR USED IN WHOLE OR IN PART, AS THE BASIS FOR THE MANUFACTURE OR SALE OF ITEMS WITHOUT WRITTEN PERMISSION FROM APC. THIS DRAWING IS BASED UPON LATEST AVAILABLE INFORMATION AND IS SUBJECT TO CHANGE WITHOUT NOTICE.

TITLE: InfraStruXure 60kW INPUT: 480V, 3PH, SINGLE FEED OUTPUT: 208V, 60kW PDU WITH TRANSFORMER EPO INTERFACE	DWG NO: ISX-PD60GF-ME3		REV. 1
	DRAWN BY: M.CRAMEN		10/28/05
	CHECKED BY: J.RING/ F.DIOSA		10/28/05
PROJECT: SUBMITTAL DRAWINGS	SHEET 10 OF 11	ENGINEER: R.HANSEN/ E.SIDIA	10/28/05

APC
AMERICAN POWER CONVERSION
132 FAIRGROUNDS RD
WEST KINGSTON, RI 02892

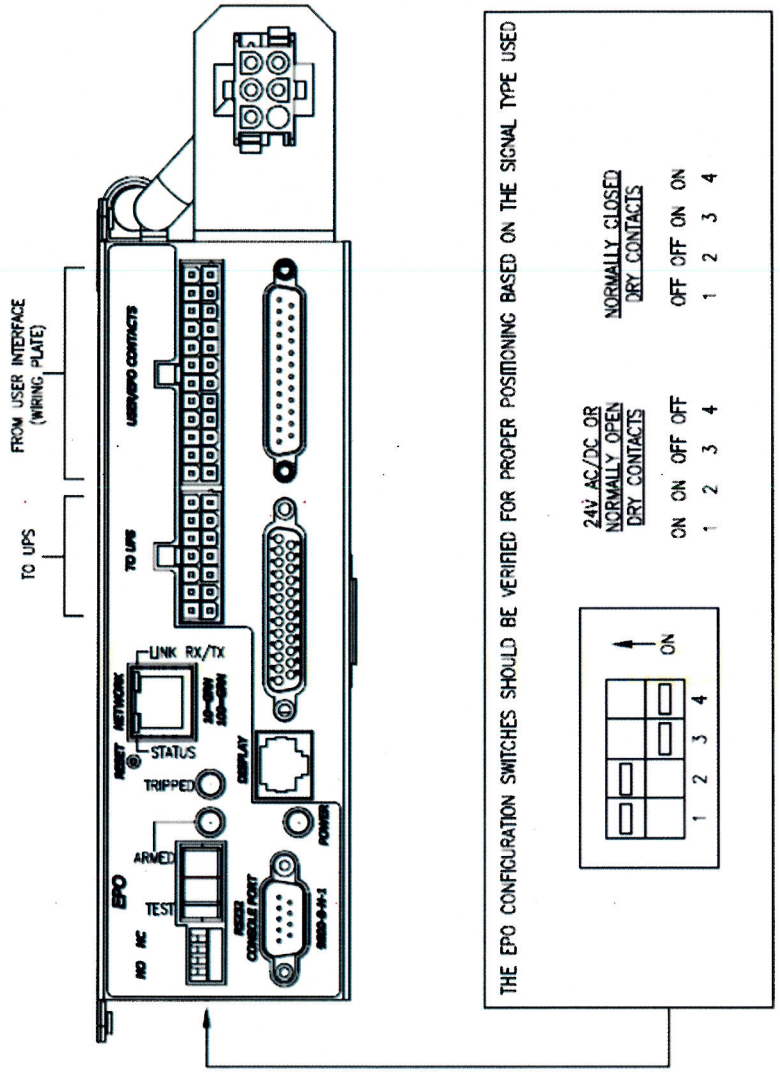

PDU INTELLIGENCE MODULE
(FRONT VIEW – ENLARGED)

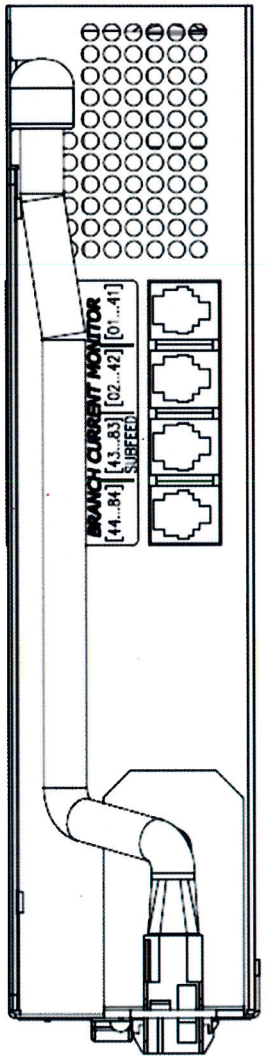

PDU INTELLIGENCE MODULE
(TOP VIEW – ENLARGED)

CONNECTORS ARE PREWIRED IF ISX-PDU IS PURCHASED WITH BRANCH CURRENT MONITORING SYSTEM

THIS DRAWING AND SPECIFICATIONS HEREIN ARE THE PROPERTY OF AMERICAN POWER CONVERSION AND SHALL NOT BE COPIED, REPRODUCED OR USED IN WHOLE OR IN PART, AS THE BASIS FOR THE MANUFACTURE OR SALE OF ITEMS WITHOUT WRITTEN PERMISSION FROM APC. THIS DRAWING IS BASED UPON LATEST AVAILABLE INFORMATION AND IS SUBJECT TO CHANGE WITHOUT NOTICE.

TITLE: InfraStruXure 60kW INPUT: 480V, 3PH, SINGLE FEED OUTPUT: 208V, 60kW PDU WITH TRANSFORMER INTELLIGENCE MODULE	DWG NO: ISX-PD60GF-ME4	REV. 1	
	DRAWN BY: M.CRAWEN		10/28/05
	CHECKED BY: J.RING/ F.DIOSA		10/28/05
PROJECT: SUBMITTAL DRAWINGS	SHEET 11 OF 11	ENGINEER: R.HANSEN/ E.SILVA	10/28/05

AMERICAN POWER CONVERSION
132 FAIRGROUNDS RD
WEST KINGSTON, RI 02892