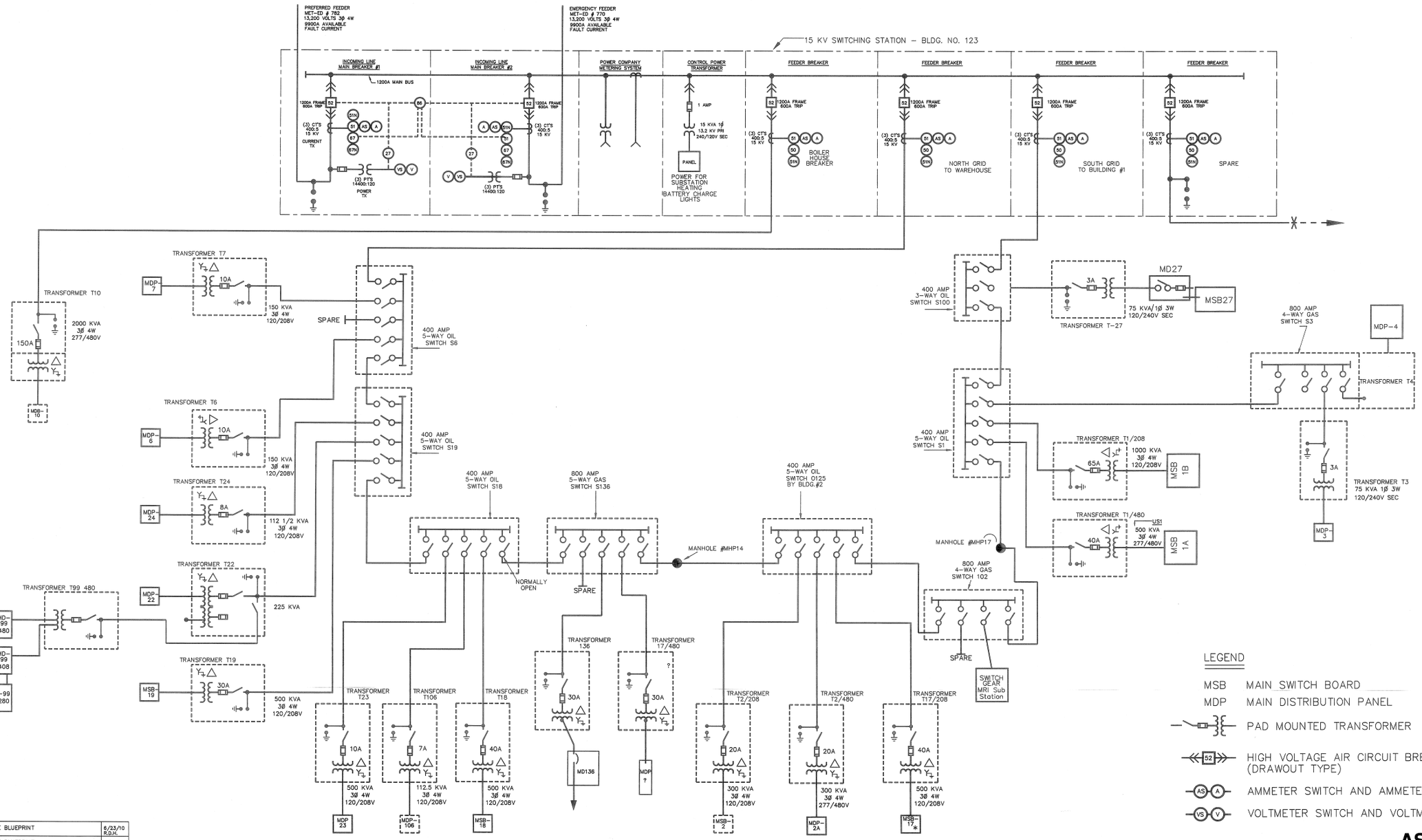

AS BUILT

REVISIONS	DATE
6 UPDATE BLUEPRINT	6/23/10 R.D.H.
5 UPDATE BLUEPRINT	3/12/10 R.D.H.
4 UPDATE BLUEPRINT	4/20/09 R.D.H.
3 ADD AMBULATORY CARE XRAY CT SCANNER FEED BUILDING 17	10/28/02 R.D.H.
2 RENUMBER ALL TRANSFORMERS AND OIL SWITCHES PER G. DECK	4/28/99 R.D.H.
1 CHANGE LOCATION OF ELEVEN SWITCHES TO KEEP IN SEQUENCE	10/31/95 R.D.H.

APPROVED: Safety & Occupational Health Manager	APPROVED: Medical Center Director	Drawing Title: SINGLE LINE DIAGRAM	Project Title: PRIMARY ELECTRICAL SYSTEM	Date: OCT.19,1995
APPROVED: Chief, Environmental Management Service	APPROVED: Associate Medical Center Director			Project No.
APPROVED:	APPROVED: Chief of Staff	APPROVED: Project Section	Building Number: N/A; Checked; Drawn: R.D.Houtz	Drawing No. 1
APPROVED:	APPROVED: Chief, Nursing Service	APPROVED: Chief, Engineering Service	Location: VETERANS AFFAIRS MEDICAL CENTER LEBANON, PENNSYLVANIA	Dwg. 1 of 2

SITELINE rev6

(954)