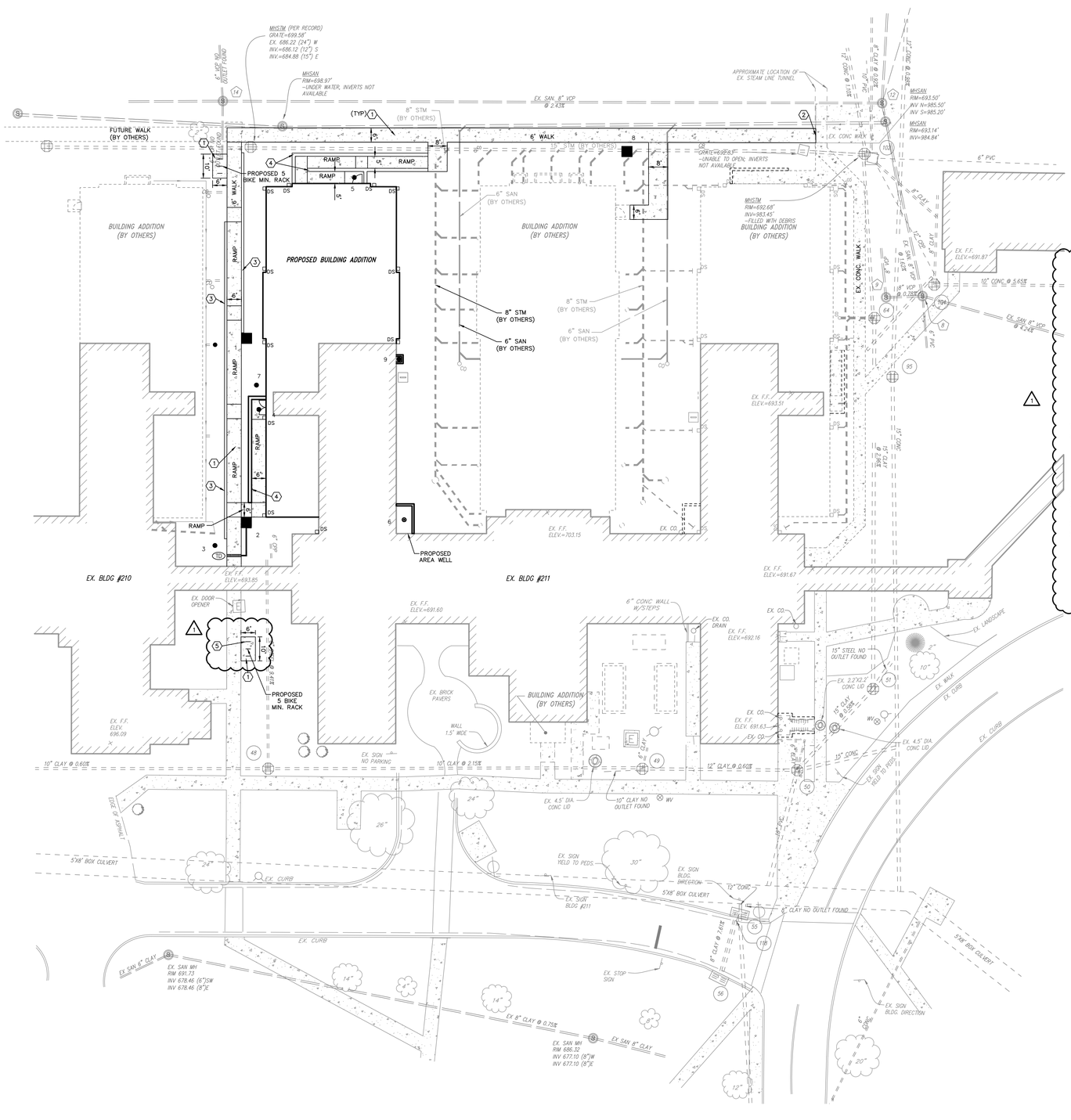

CODED NOTES

1. TYPICAL EXTERIOR CONCRETE SLAB WALK. SEE DETAIL THIS SHEET.
2. MATCH EXISTING.
3. SEGMENTAL RETAINING WALL. SEE DETAIL THIS SHEET.
4. ACCESSIBLE RAMP WALL. SEE SECTION THIS SHEET.
5. BIKE RACK. SEE DETAIL THIS SHEET.

NOTE

RAILINGS ARE REQUIRED ON BOTH SIDES OF ALL RAMPS. SEE RAILING DETAIL THIS SHEET.

SCALE: 1" = 20'

EXISTING LEGEND

BENCHMARK
POWER POLE
LIGHT POLE
SANITARY MANHOLE
STORM MANHOLE
CATCH BASIN
CURB INLET
FIRE HYDRANT
WATER VALVE
WATER MANHOLE
WATER METER
WATER INDICATOR POST
A/C UNIT
ELECTRIC BOX
ELECTRIC METER
ELECTRIC MANHOLE
TELEPHONE MANHOLE
PINE TREE
DECIDUOUS TREE
SIGN
BUSH
SANITARY SEWER
STORM SEWER
EXISTING CONCRETE

EX STORM STRUCTURE CHART

44 EX. CB
GRATE 696.09
INV 693.73 (4")N
INV 692.35 (8")SE

45 EX. TRENCH DRAIN
GRATE 693.85
INV 693.34 (4")E

46 EX. TRENCH DRAIN
GRATE 694.83
INV 692.91 (8")E

47 EX. CB
GRATE 696.05
INV 694.12 (4")N
INV 694.57 (6")SE
INV 692.48 (8")S
INV 692.83 (8")W

48 EX. STORM MH
RIM 692.89
INV 682.81 (8")NW
INV 682.49 (10")E
INV 682.56 (10")SW

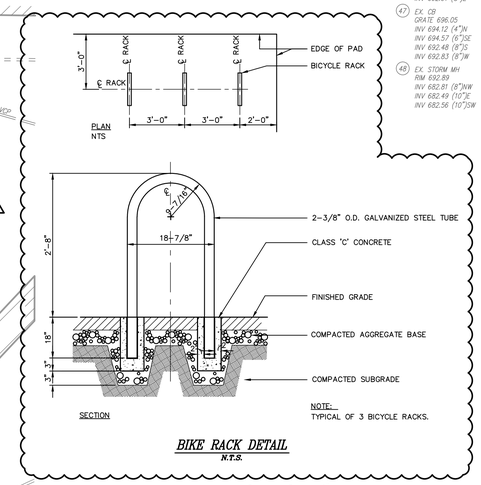

BIKE RACK DETAIL
N.T.S.

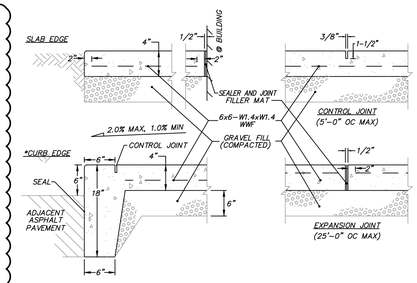

TYPICAL EXTERIOR CONCRETE SLAB WALK
NTS

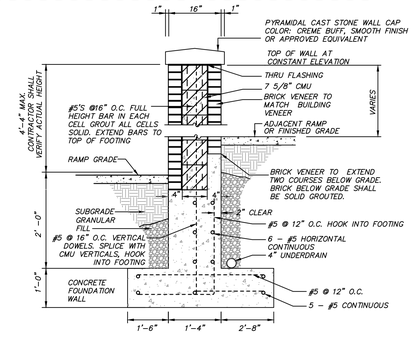

CONTRACTOR TO PROVIDE SHOP DRAWING OF WALL AND WALL CAP FOR APPROVAL BY OWNER'S REPRESENTATIVE PRIOR TO CONSTRUCTION.

TYPICAL WALL SECTION W/ ADJACENT RAMP
N.T.S.

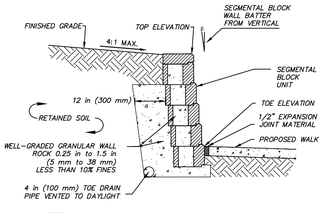

NOTES:

1. SUBMIT SAMPLES OF WALL AND CAP UNITS FOR ARCHITECT'S APPROVAL.
2. CONSTRUCT FIELD MOCK-UP PRIOR TO INSTALLATION FOR ARCHITECT'S APPROVAL AS SPECIFIED.
3. CONSTRUCT WALLS PER MANUFACTURER'S SPECIFICATIONS.
4. SEE SHEET C104 FOR WALL GRADES.

SEGMENTAL RETAINING WALL DETAIL
N.T.S.

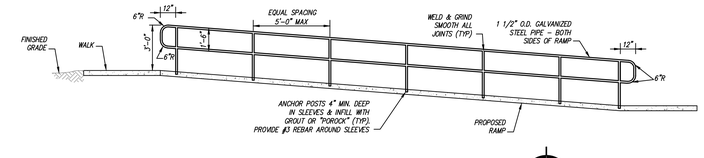

RAILING DETAIL
NTS

KLEINGERS & ASSOCIATES
350 Worthington Rd. Suite B, Westerville, OH 43082
(614) 882-4311 Fax (614) 882-4479
www.KLEINGERS.com

Revisions		Date
1	ADDENDUM	09/18/13

CONSULTANTS:

STATE OF OHIO — MICHAEL J. COUVREUR E-70851 REGISTERED PROFESSIONAL ENGINEER

ARCHITECT/ENGINEERS:
JOHN POE ARCHITECTS
116 EAST THIRD STREET
DAYTON, OHIO
45402-2130
937 461 3290 PHONE
937 461 0260 FAX
jpa@johnpoe.com

Drawing Title: LOCATION PLAN

Approved: Project Director

Project Title: RENOVATE CLC BUILDING 211 WEST

Location: Chillicothe, Ohio

Date: 09/11/2013 | Checked: RVP | Drawn: MJC

Project No.: VA Project No. 538-107; JPA Project No. 11001.00

Building Number: 211

Drawing Number: C102

Dwg. 4 of 132

Office of Construction and Facilities Management

Department of Veterans Affairs

H:\Columbus\P\100021\DWG\004\SHEETS\100021LOC004.dwg, C101 LOCATION PLAN, 9/18/2013 3:36:02 PM, mcouvreur