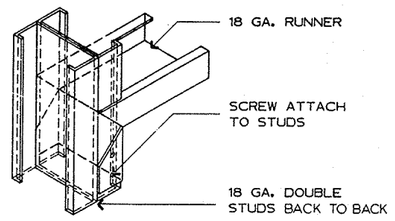

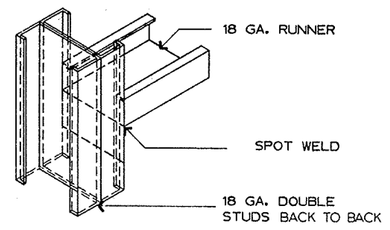

HEADER DETAILS FOR DOOR FRAMES

SCALE- NONE

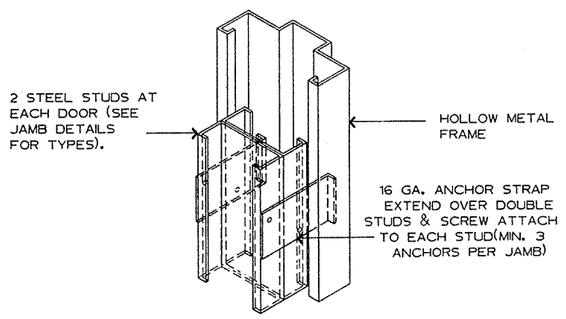

TYP. JAMB ANCHORS FOR HOLLOW MTL. FRAME

SCALE- NONE

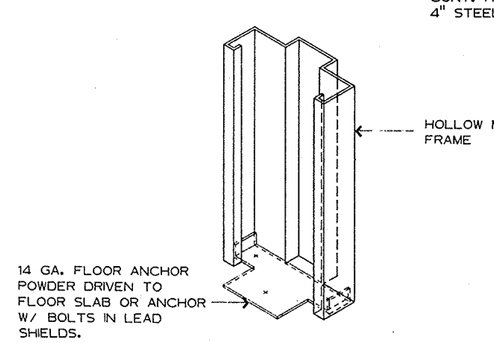

HOLLOW MTL. FRAME FLOOR ANCHOR

SCALE- NONE

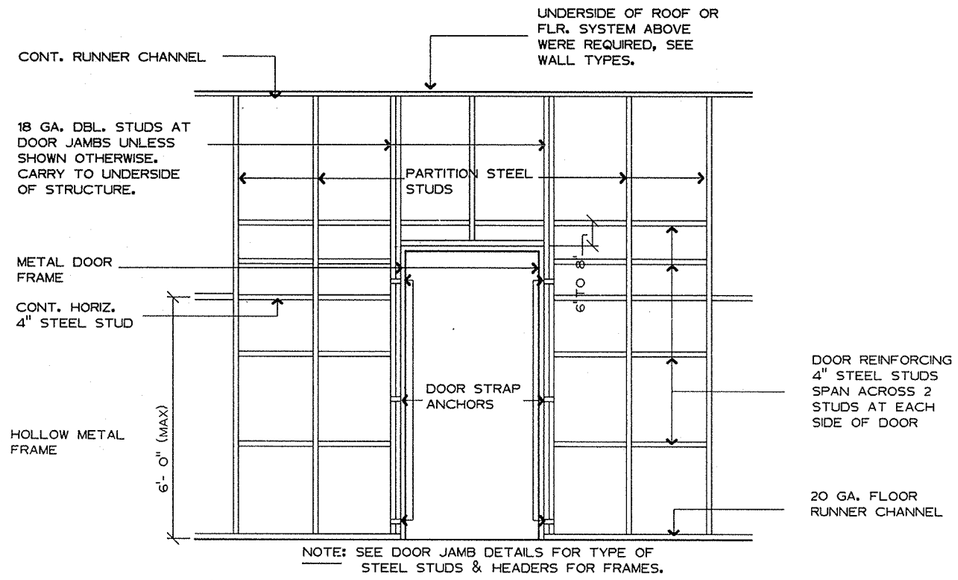

NOTE: SEE DOOR JAMB DETAILS FOR TYPE OF STEEL STUDS & HEADERS FOR FRAMES.

TYPICAL STEEL STUD FRAMING (FULL HEIGHT) AT METAL DOOR FRAMES

SCALE- NONE

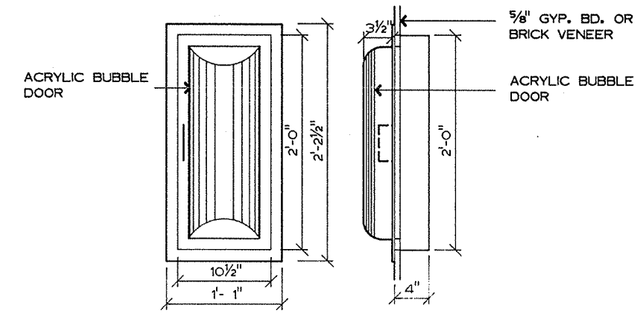

FIRE EXTINGUISHER CABINET ELEVATION AND SECTION

SCALE- NONE

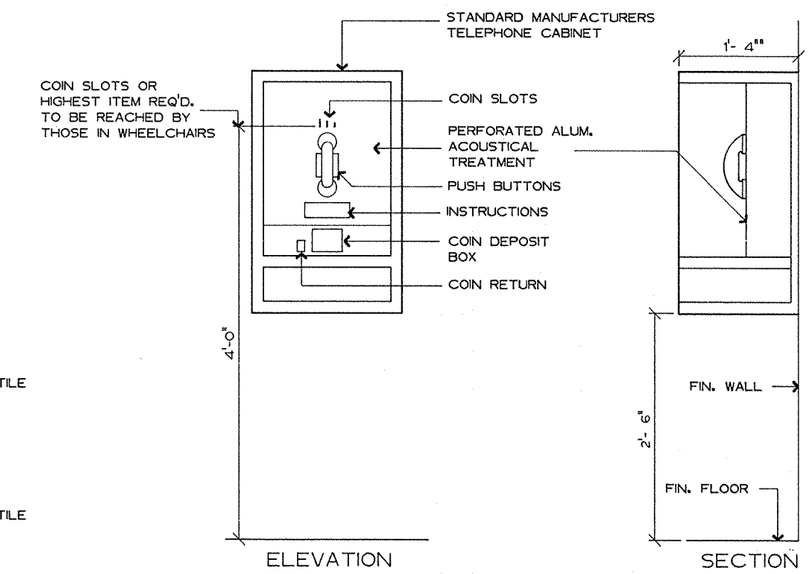

PUBLIC TELEPHONE

N.T.S.

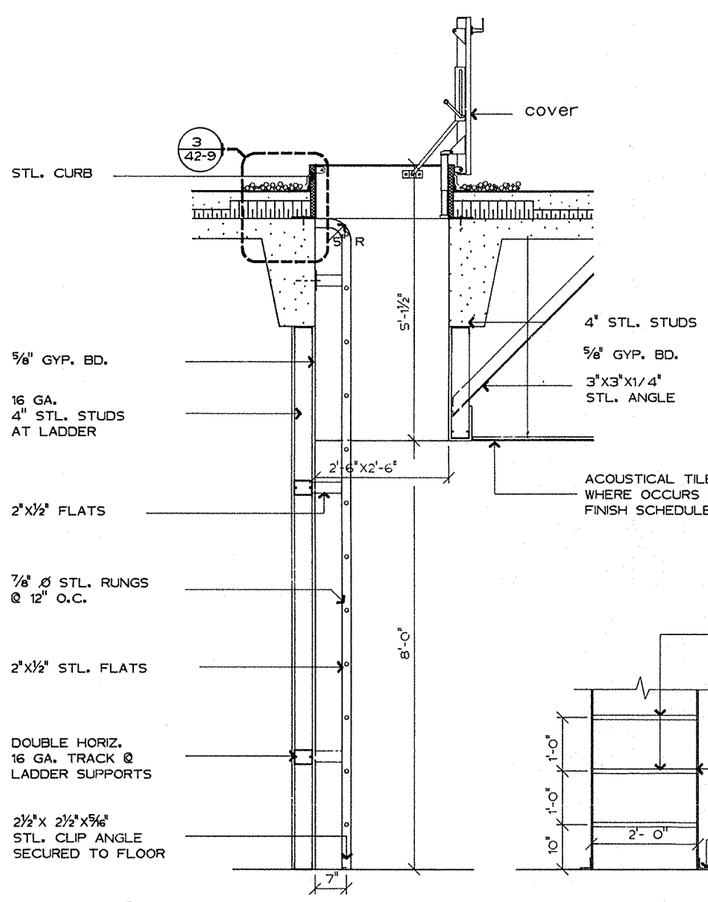

1/42-9 SECT. THRU ROOF SCUTTLE & LADDER

THREE QUARTERS INCH EQUALS ONE FOOT

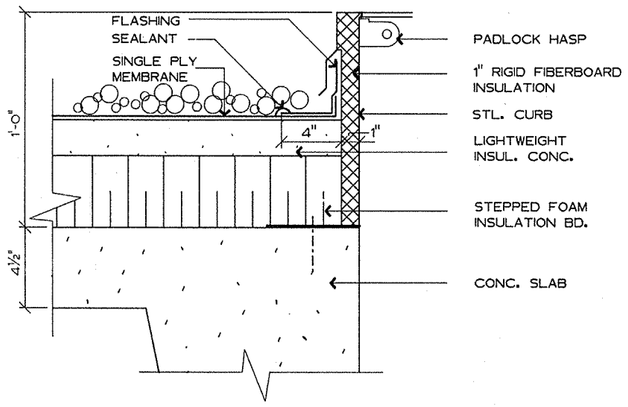

3/42-9 ROOF SCUTTLE DETAIL

THREE INCHES EQUAL ONE FOOT

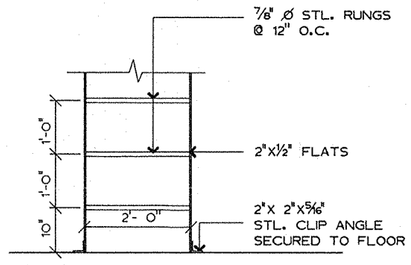

LADDER DETAIL

THREE QUARTERS INCH EQUALS ONE FOOT

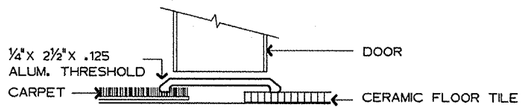

THRESHOLD TYPE 1

N.T.S.

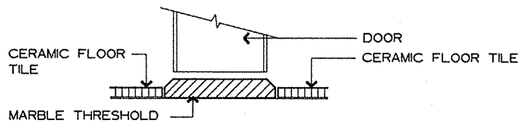

THRESHOLD TYPE 2

N.T.S.

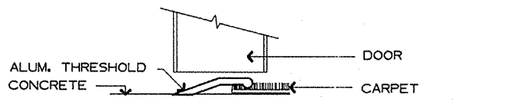

THRESHOLD TYPE 3

N.T.S.

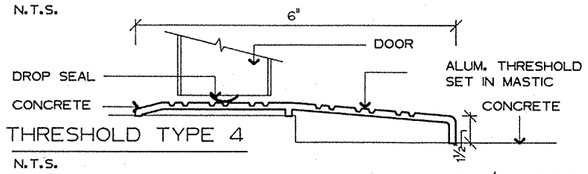

THRESHOLD TYPE 4

N.T.S.

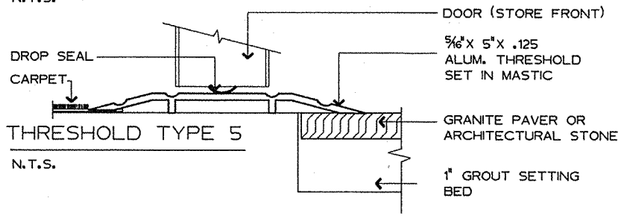

THRESHOLD TYPE 5

N.T.S.

THRESHOLD KEY:

THRESHOLD TYPE 1- (INTERIOR)	CARPET/CERAMIC FLOOR TILE CERAMIC FLOOR TILE/CERAMIC FLOOR TILE CARPET/CARPET
THRESHOLD TYPE 2- (INTERIOR)	CERAMIC FLOOR TILE/CERAMIC FLOOR TILE
THRESHOLD TYPE 3- (INTERIOR)	CARPET/CONCRETE
THRESHOLD TYPE 4- (EXTERIOR)	CONCRETE/CONCRETE
THRESHOLD TYPE 5- (EXTERIOR)	CERAMIC FLOOR TILE/GRANITE PAVER OR ARCHITECTURAL STONE CARPET/GRANITE PAVER

Fully Sprinklered

Revisions	Date

2WR
Watson Watson Rutland / Architects Inc.
166 Commerce Street
P.O. Box 4834
Montgomery, Alabama 36104
205)263-6401

STATE OF ALABAMA — WATSON 503 — WATSON 1528 — RUTLAND 2149 — REGISTERED ARCHITECTS

Drawing Title: Frames,Sills,Details	Project Title: Relocate Regional Office to Department Owned Grounds		Date: 27 JANUARY 92
Approved: Area Project Manger	Building Number: 42	Checked	Drawn	Project No. 322-002
	Location: VMAC Montgomery,Al.		DRAWING NO. 42-9 Dwg. 33 Of 134

Office of Facilities — Department of Veterans Affairs

VA FORM 08-6231A, JAN 1990