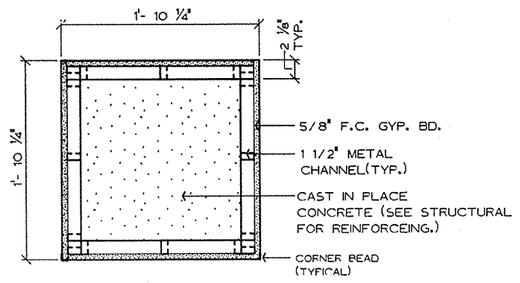

1 / 42-12 DETAIL
ONE AND ONE HALF INCH EQUALS ONE FOOT

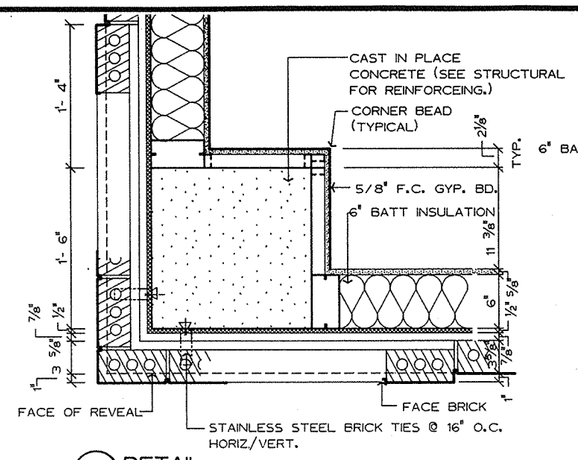

2 / 42-12 DETAIL
ONE AND ONE HALF INCH EQUALS ONE FOOT

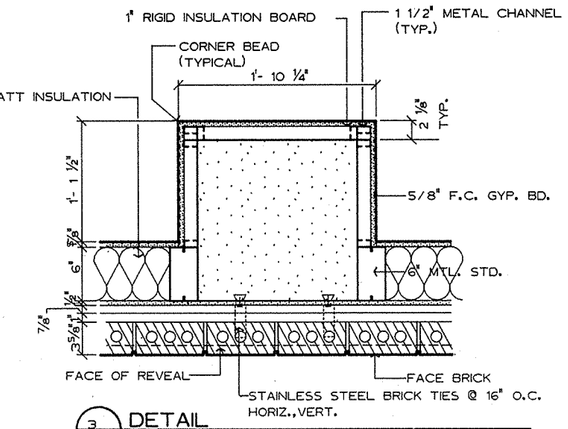

3 / 42-12 DETAIL
ONE AND ONE HALF INCH EQUALS ONE FOOT

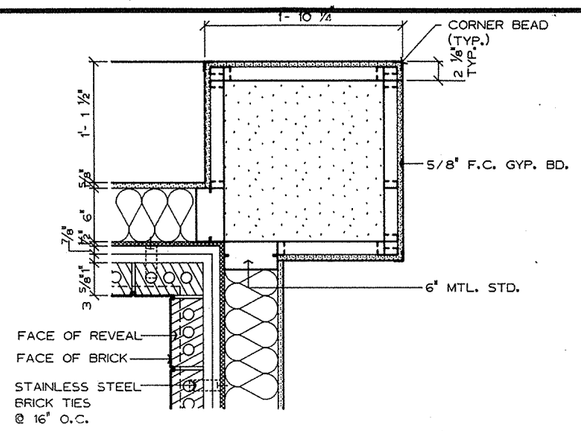

4 / 42-12 DETAIL
ONE AND ONE HALF INCH EQUALS ONE FOOT

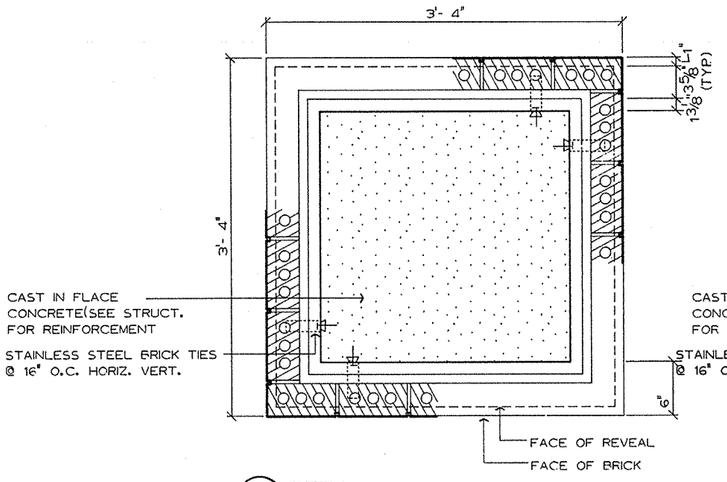

5 / 42-12 DETAIL
ONE AND ONE HALF INCH EQUALS ONE FOOT

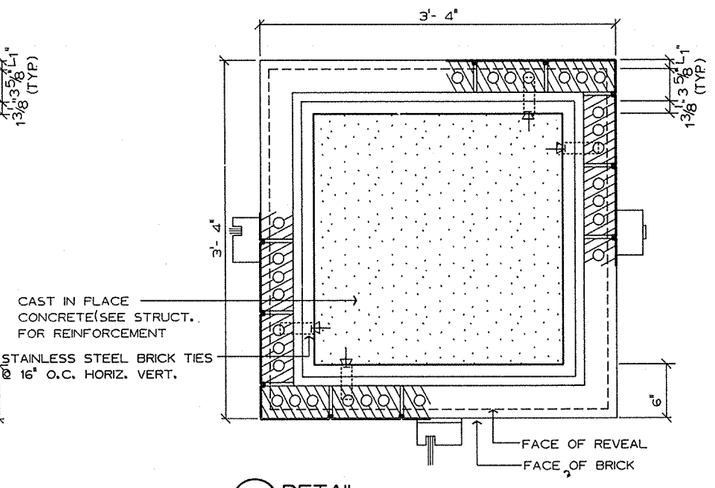

6 / 42-12 DETAIL
ONE AND ONE HALF INCH EQUALS ONE FOOT

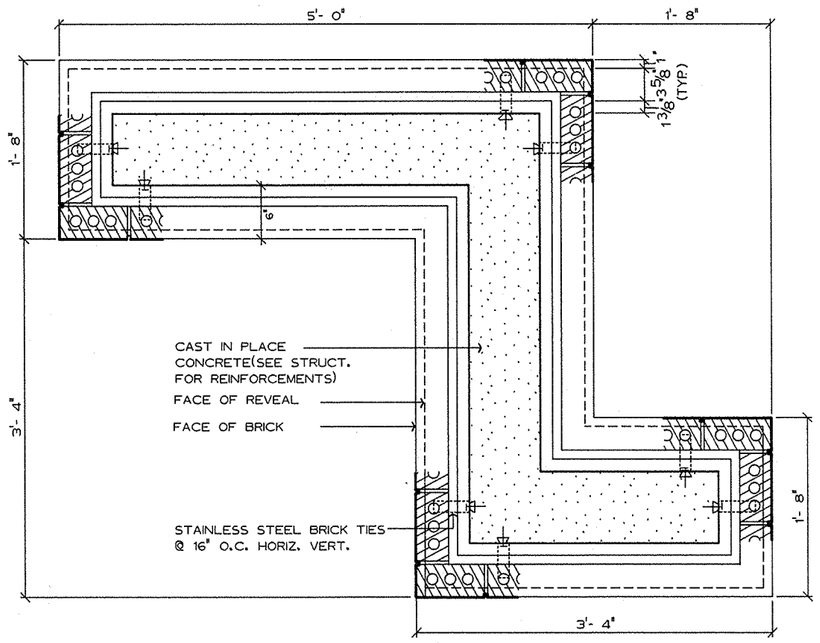

7 / 42-12 DETAIL
ONE AND ONE HALF INCH EQUALS ONE FOOT

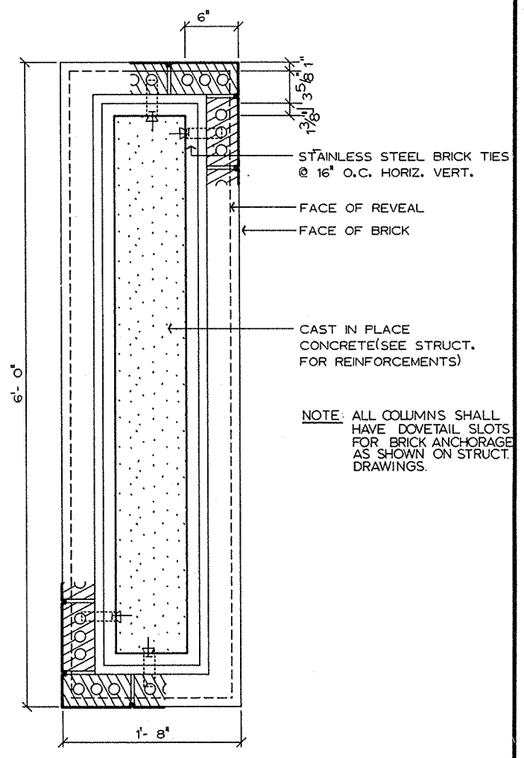

NOTE: ALL COLUMNS SHALL HAVE DOVETAIL SLOTS FOR BRICK ANCHORAGE AS SHOWN ON STRUCT. DRAWINGS.

8 / 42-12 DETAIL
ONE AND ONE HALF INCH EQUALS ONE FOOT

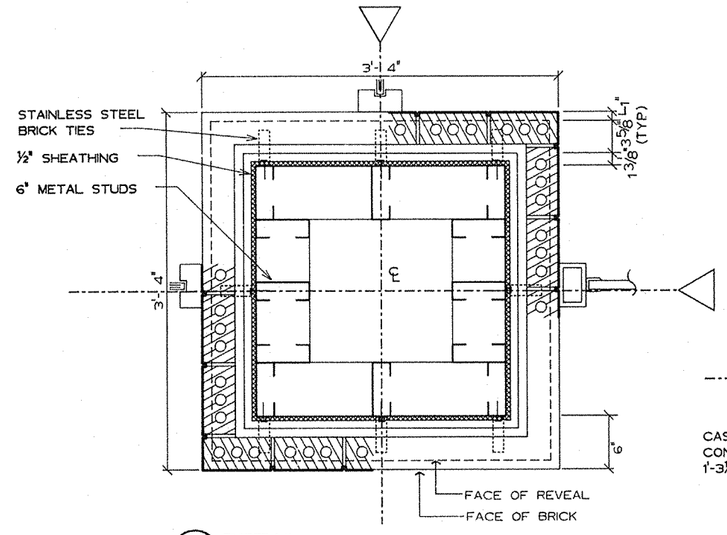

8.1 / 42-12 DETAIL
ONE AND ONE HALF INCH EQUALS ONE FOOT

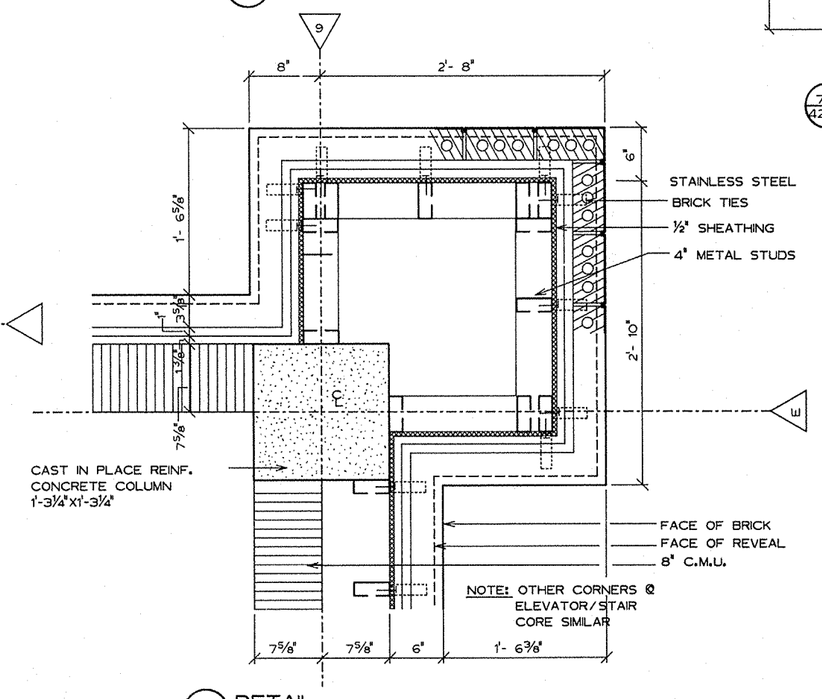

8.2 / 42-12 DETAIL
ONE AND ONE HALF INCH EQUALS ONE FOOT

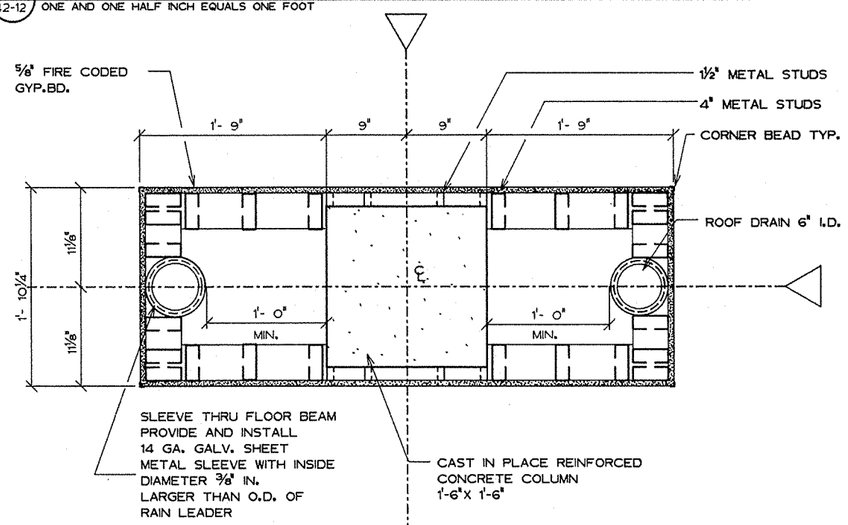

8.3 / 42-12 DETAIL (TYPICAL @ ROOF DRAINS)
ONE AND ONE HALF INCH EQUALS ONE FOOT

Fully Sprinklered

Revisions	Date

2WR
Watson Watson Rutland / Architects Inc.
166 Commerce Street
P.O. Box 4834
Montgomery, Alabama 36104
205)263-6401

Drawing Title: Plan Details
Approved: Area Project Manger
Project Title: Relocate Regional Office to Department Owned Grounds
Building Number: 42
Checked
Drawn
Location: VMAC Montgomery,Al.
Date: 27 JANUARY 92
Project No. 322-002
DRAWING NO. 42-12
Dwg-36 Of 134

Office of Facilities
Department of Veterans Affairs

VA FORM 08-6231A, JAN 1990