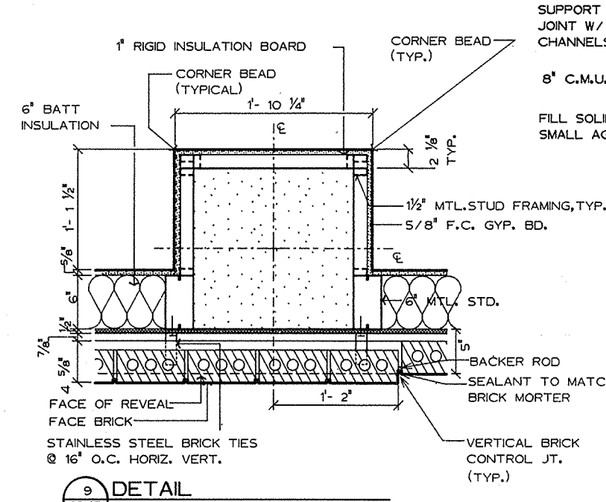

9 42-13 DETAIL
ONE AND ONE HALF INCH EQUALS ONE FOOT

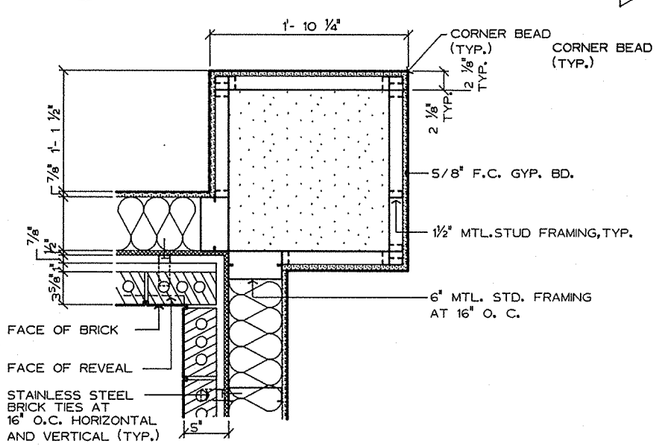

10 42-13 DETAIL
ONE AND ONE HALF INCH EQUALS ONE FOOT

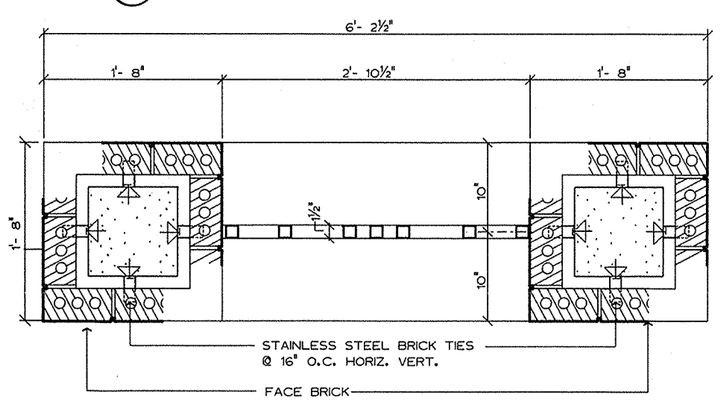

11 42-13 DETAIL
ONE AND ONE HALF INCH EQUALS ONE FOOT

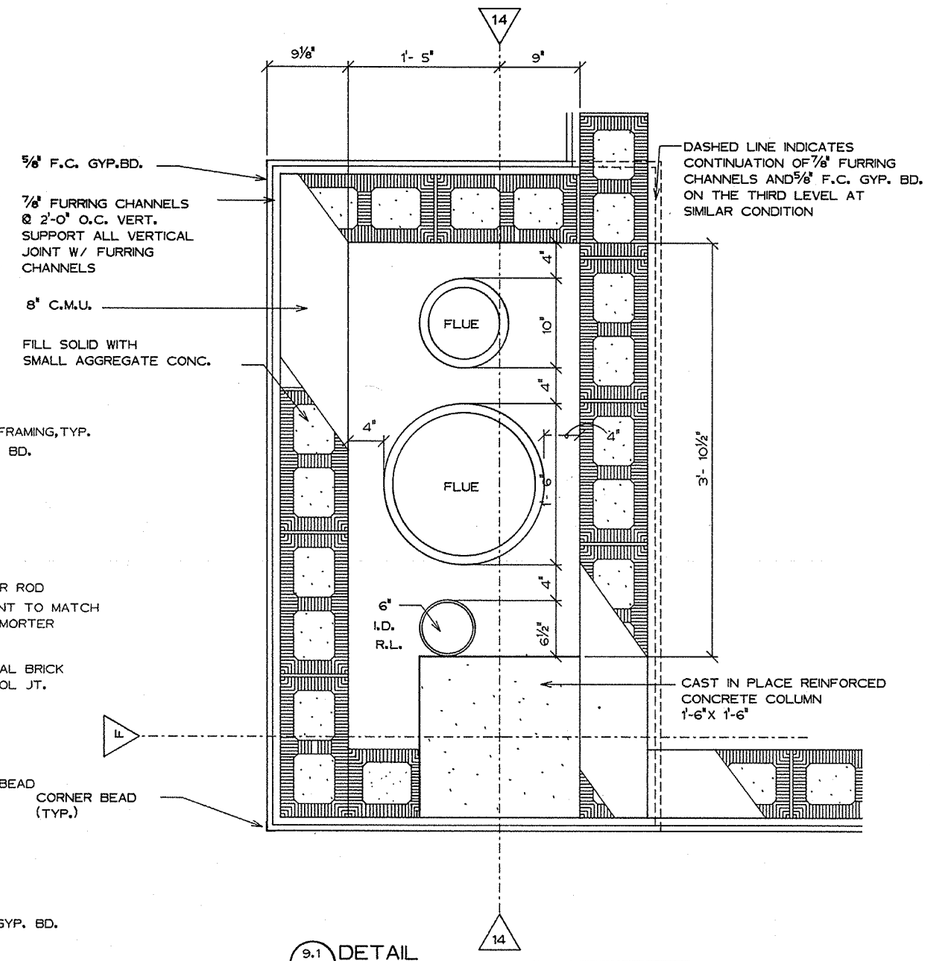

9.1 42-13 DETAIL
ONE AND ONE HALF INCH EQUALS ONE FOOT

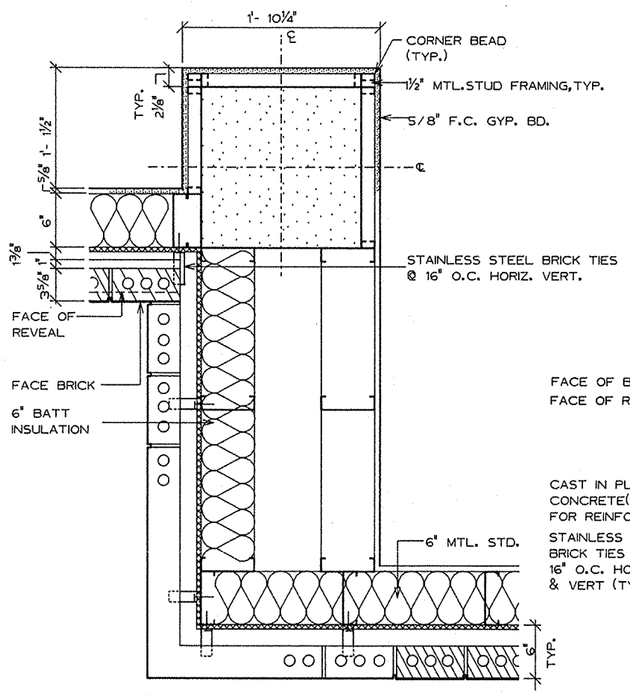

15 42-13 DETAIL
ONE AND ONE HALF INCH EQUALS ONE FOOT

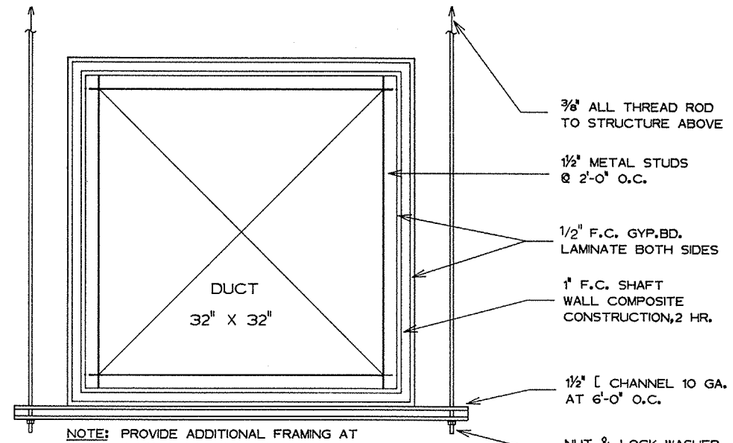

NOTE: PROVIDE ADDITIONAL FRAMING AT ATTACHMENT POINTS IN ROOF STRUCTURE AS REQUIRED TO SUPPORT HORIZONTAL RUN OF RATED DUCT ENCLOSURE.

A 42-13 DETAIL
ONE AND ONE HALF INCH EQUALS ONE FOOT

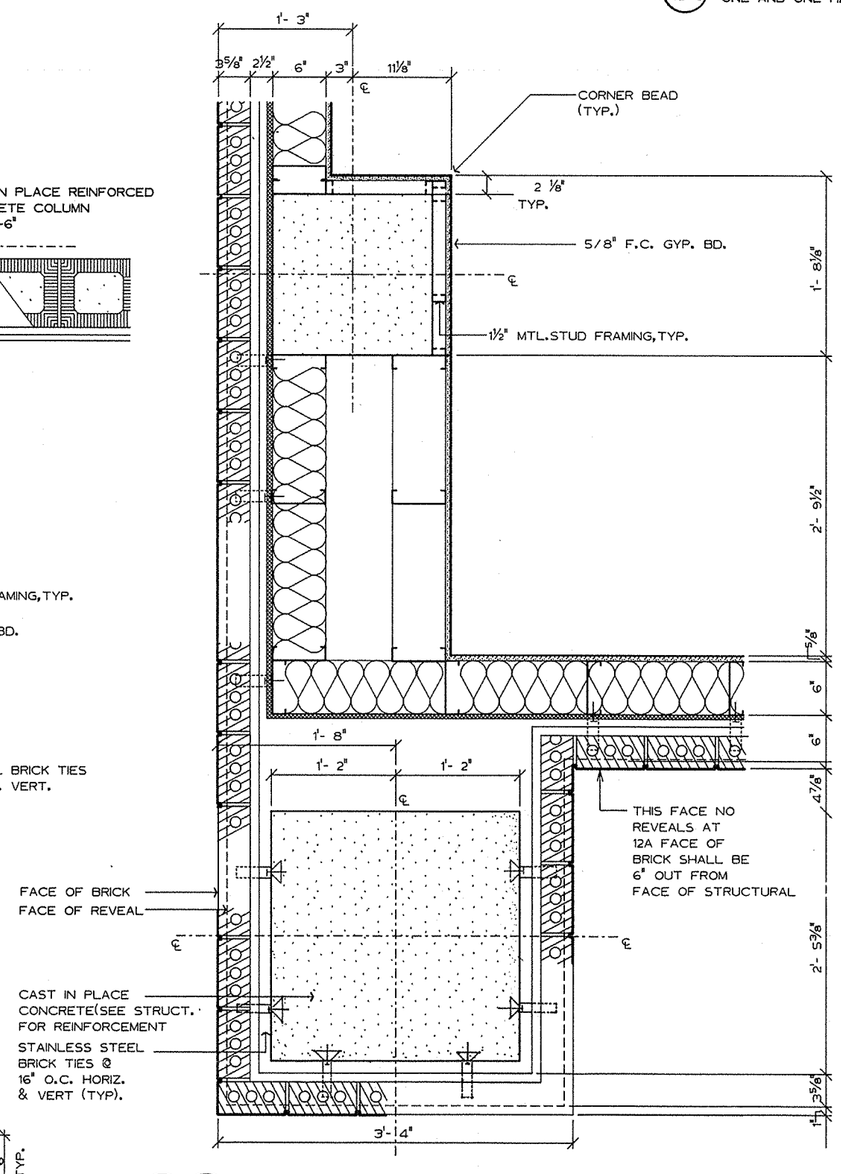

12 42-13 12A 42-13 DETAIL
ONE AND ONE HALF INCH EQUALS ONE FOOT

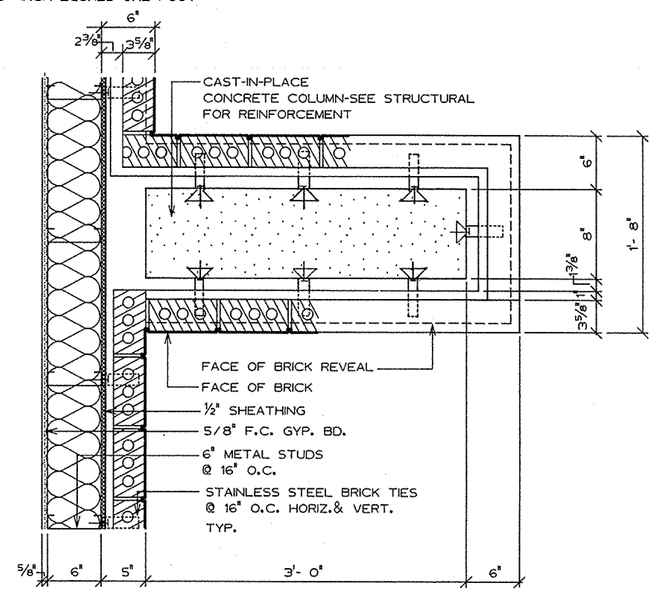

13 42-13 DETAIL
ONE AND ONE HALF INCH EQUALS ONE FOOT

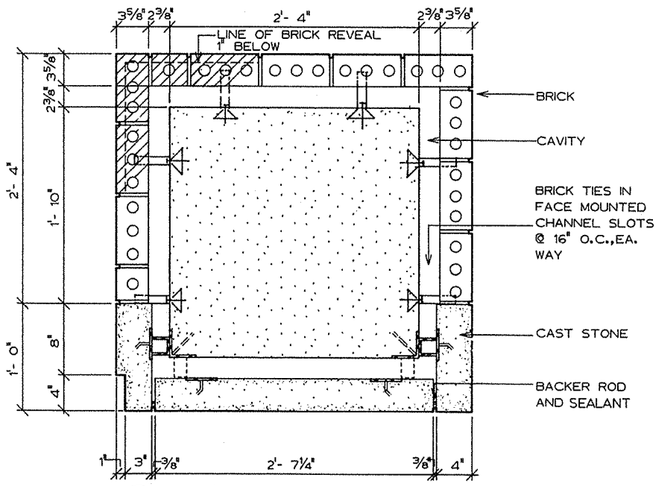

14 42-13 DETAIL
ONE AND ONE HALF INCH EQUALS ONE FOOT

Fully Sprinklered

Revisions	Date

2WR
Watson Watson Rutland / Architects Inc.
166 Commerce Street
P.O. Box 4834
Montgomery, Alabama 36104
205)263-6401

Drawing Title: Plan Details
Approved: Area Project Manger
Project Title: Relocate Regional Office to Department Owned Grounds
Building Number: 42
Checked
Drawn
Location: VMAC Montgomery, Al.
Date: 27 JANUARY 92
Project No. 322-002
DRAWING NO. 42-13
Dwg. 37 Of 134

Office of Facilities
Department of Veterans Affairs

VA FORM 08-6231A, JAN 1990