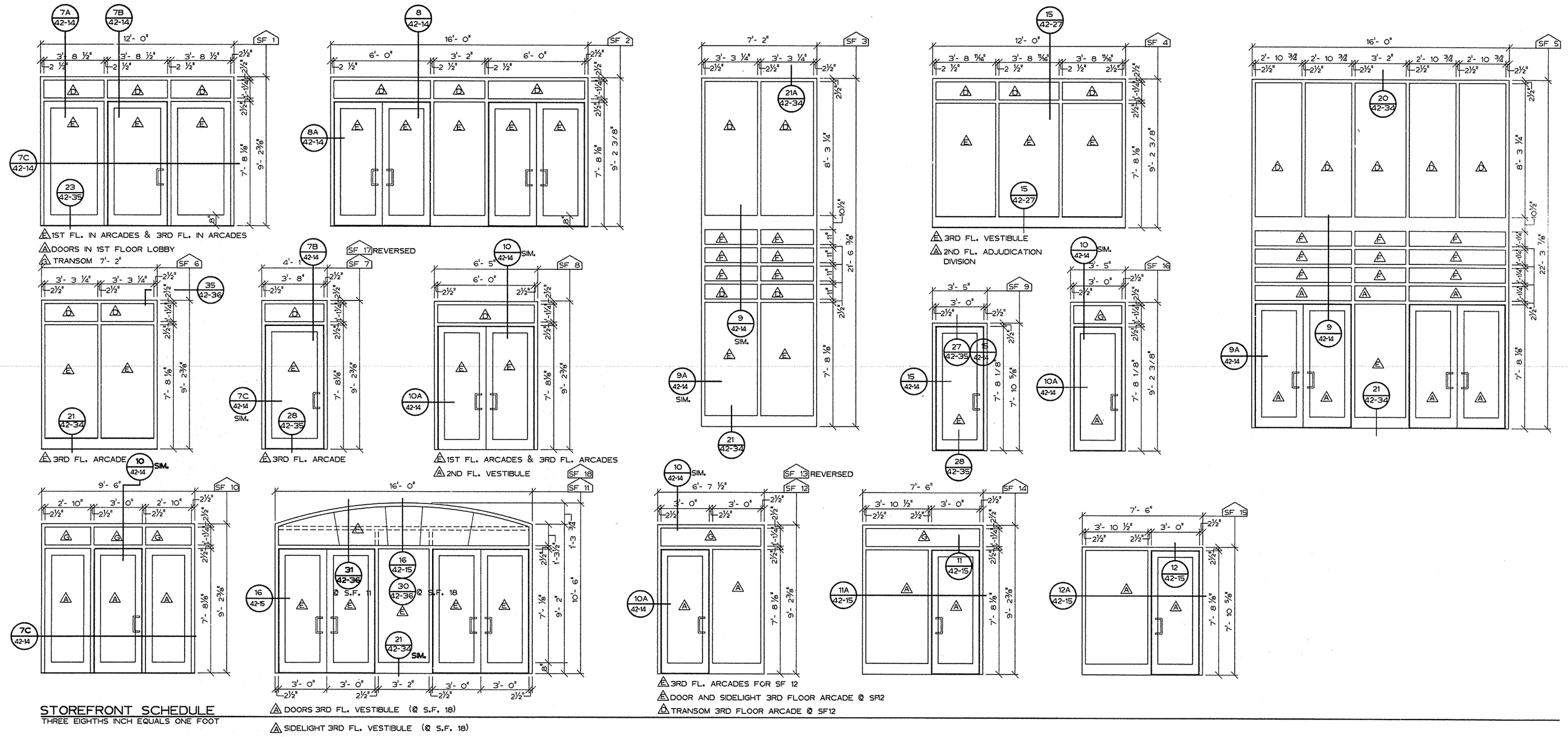

STOREFRONT SCHEDULE

THREE EIGHTHS INCH EQUALS ONE FOOT

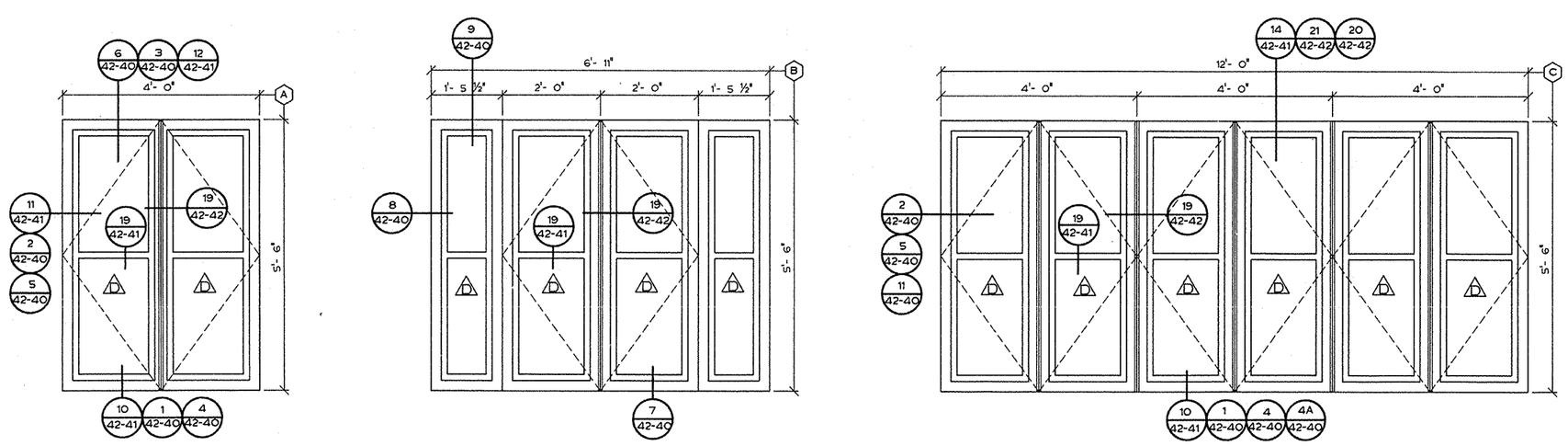

WINDOW SCHEDULE

THREE QUARTERS INCH EQUALS ONE FOOT

GENERAL NOTES

1. REFER TO BUILDING ELEVATIONS AND TO FLOOR PLANS FOR LOCATION OF STOREFRONT AND WINDOWS
2. REFER TO STOREFRONT DETAILS AND WINDOW DETAILS AS INDICATED ON ELEVATIONS
3. REFER TO GLASS LEGEND △ FOR GLASS TYPES
4. ALL OPENINGS SHALL BE FIELD VERIFIED
5. REFER TO SPECIFICATIONS FOR FRAME FINISH

GLASS LEGEND

- A — CLEAR TEMPERED GLASS
- B — TINTED TEMPERED GLASS
- C — WIRE GLASS
- D — INSULATING GLASS W/ CLEAR FLOAT GLASS OUTBOARD PANE AND TINTED FLOAT GLASS INBOARD PANE
- E — INSULATING GLASS W/ CLEAR TEMPERED GLASS OUTBOARD PANE AND TINTED TEMPERED GLASS INBOARD PANE
- F — TEMPERED SPANDRAIL GLASS
- G — CLEAR FLOAT GLASS

Fully Sprinklered

Revisions	Date

2WR

Watson Watson Rutland / Architects Inc.

166 Commerce Street
P.O. Box 4834
Montgomery, Alabama 36104
205)263-6401

STATE OF ALABAMA — WATSON 5013 — WATSON 1628 — RUTLAND 2149 — REGISTERED ARCHITECTS

Drawing Title	Exterior Window and Storefront Schedules
Project Title	Relocate Regional Office to Department Owned Grounds
Date	27 JANUARY 92
Project No.	322-002
Approved: Area Project Mangor	
Building Number	42
Checked	
Drawn	
Location	VMAC Montgomery, Al.
DRAWING NO.	42-17
	Dwg41 of134

Office of Facilities

Department of Veterans Affairs

VA FORM 08-6231A, JAN 1990