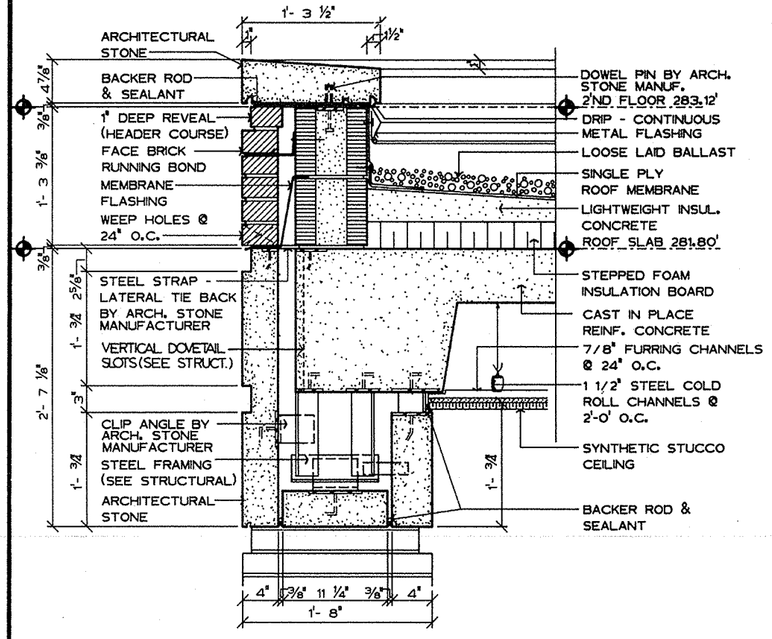

14 DETAIL 42-34
ONE AND ONE HALF INCH EQUALS ONE FOOT

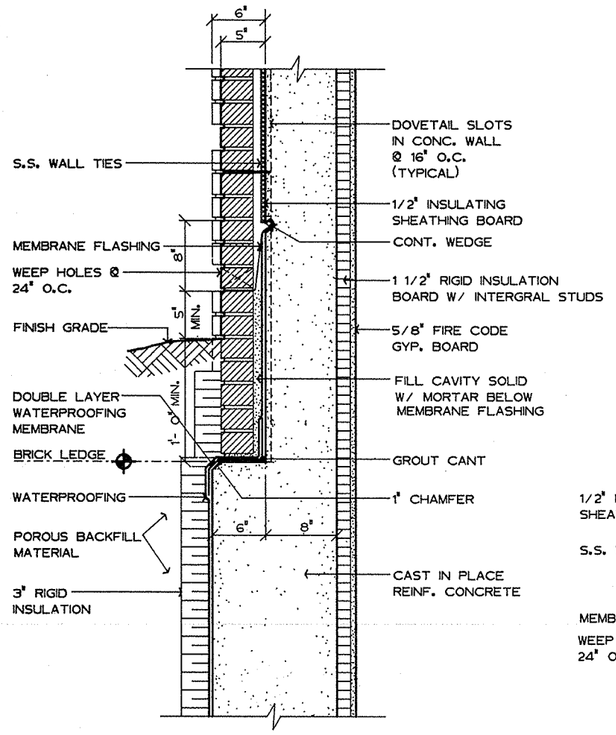

15 DETAIL 42-34
ONE AND ONE HALF INCH EQUALS ONE FOOT

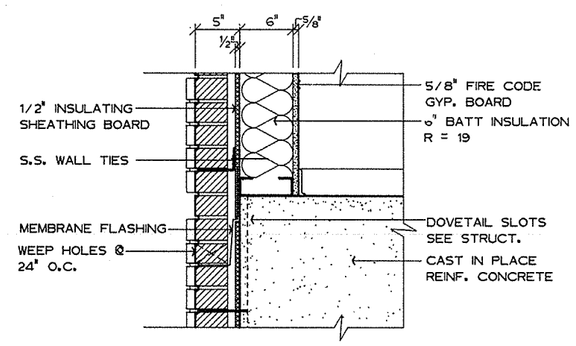

16 DETAIL 42-34
ONE AND ONE HALF INCH EQUALS ONE FOOT

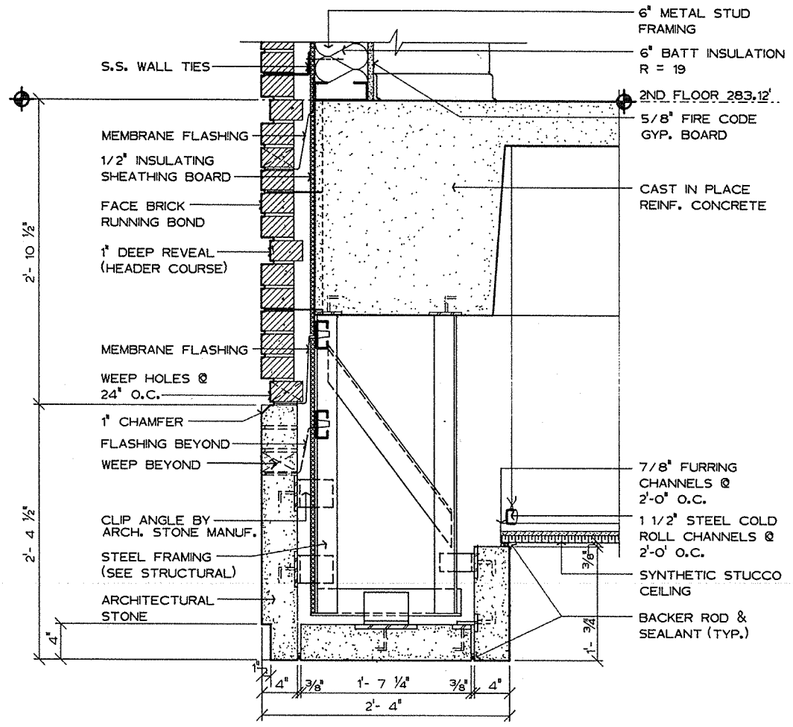

17 DETAIL 42-34
ONE AND ONE HALF INCH EQUALS ONE FOOT

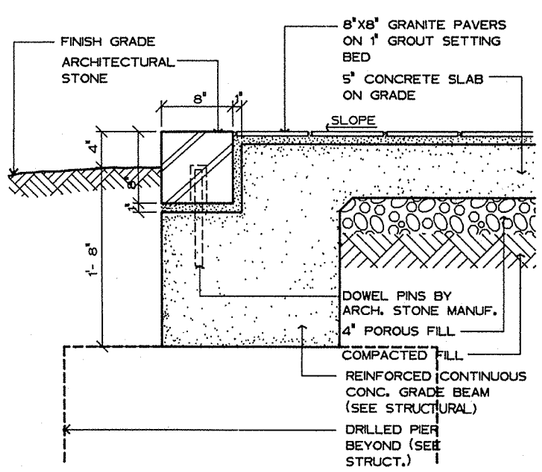

18 DETAIL 42-34
ONE AND ONE HALF INCH EQUALS ONE FOOT

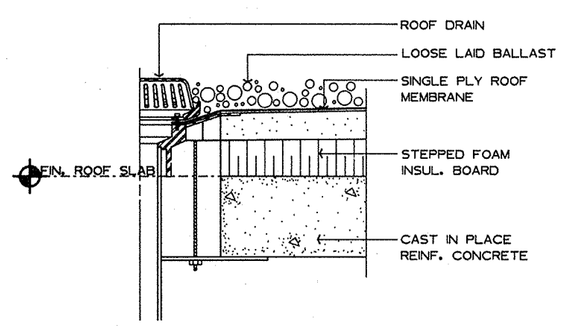

19 DETAIL 42-34
THREE INCHES EQUAL ONE FOOT

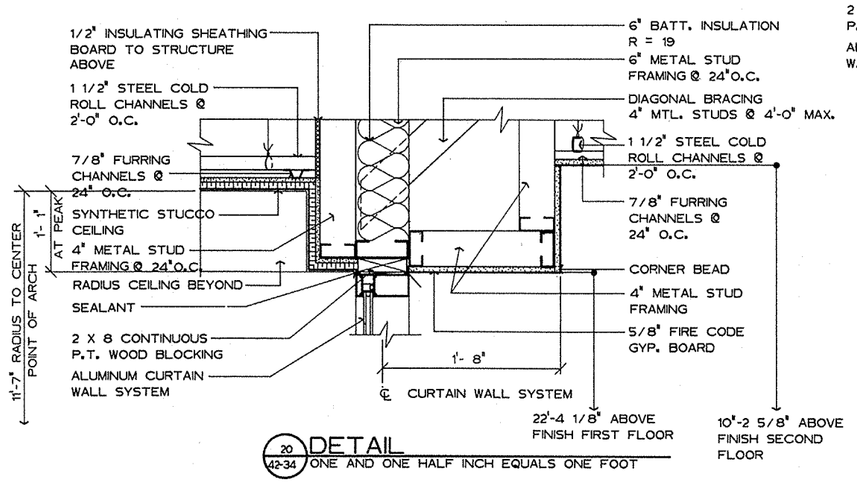

20 DETAIL 42-34
ONE AND ONE HALF INCH EQUALS ONE FOOT

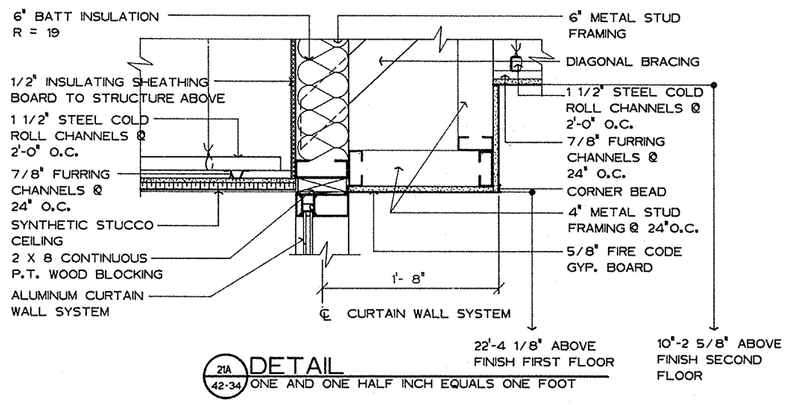

21A DETAIL 42-34
ONE AND ONE HALF INCH EQUALS ONE FOOT

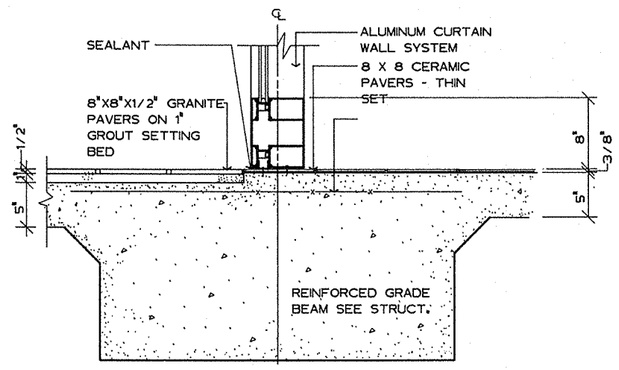

21 DETAIL 42-34
ONE AND ONE HALF INCH EQUALS ONE FOOT

Fully Sprinklered

Revisions	Date

2WR
Watson Watson Rutland / Architects Inc.
166 Commerce Street
P.O. Box 4834
Montgomery, Alabama 36104
205)263-6401

STATE OF ALABAMA — WATSON 503 — WATSON 1429 — RUTLAND 2149 — REGISTERED ARCHITECTS

Drawing Title: Details

Approved: Area Project Manger

Project Title: Relocate Regional Office to Department Owned Grounds

Building Number: 42

Location: VMAC Montgomery,Al.

Checked | Drawn

Date: 27 JANUARY 92

Project No. 322-002

DRAWING NO. 42-34

Dwg 58 of 134

Office of Facilities — Department of Veterans Affairs

VA FORM 08-6231A, JAN 1990

G.P.O. 1991-0-282-127