NOTE: ALL WINDOW FRAMES TO BE THERMALLY BROKEN.

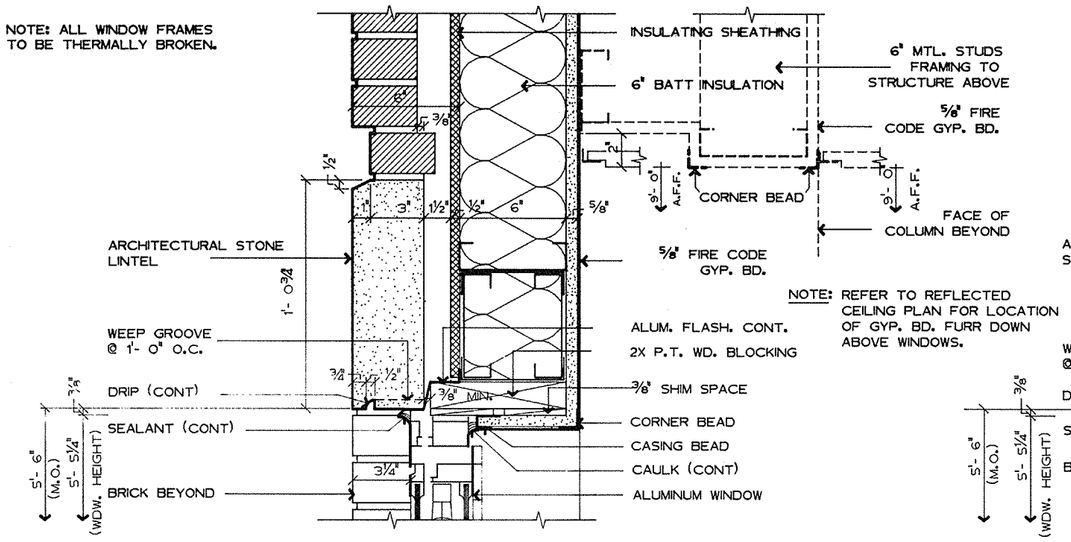

NOTE: REFER TO REFLECTED CEILING PLAN FOR LOCATION OF GYP. BD. FURR DOWN ABOVE WINDOWS.

3 / 42-40 **HEAD DETAIL**
THREE INCHES EQUAL ONE FOOT

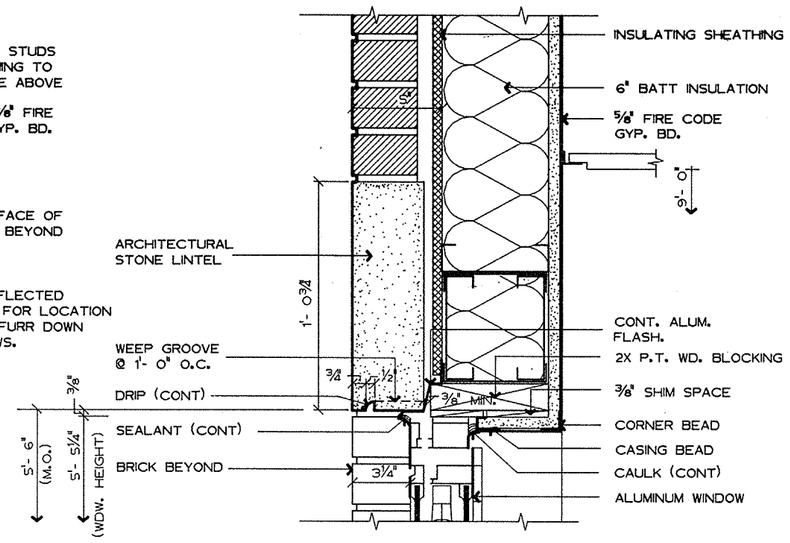

6 / 42-40 **HEAD DETAIL**
THREE INCHES EQUAL ONE FOOT

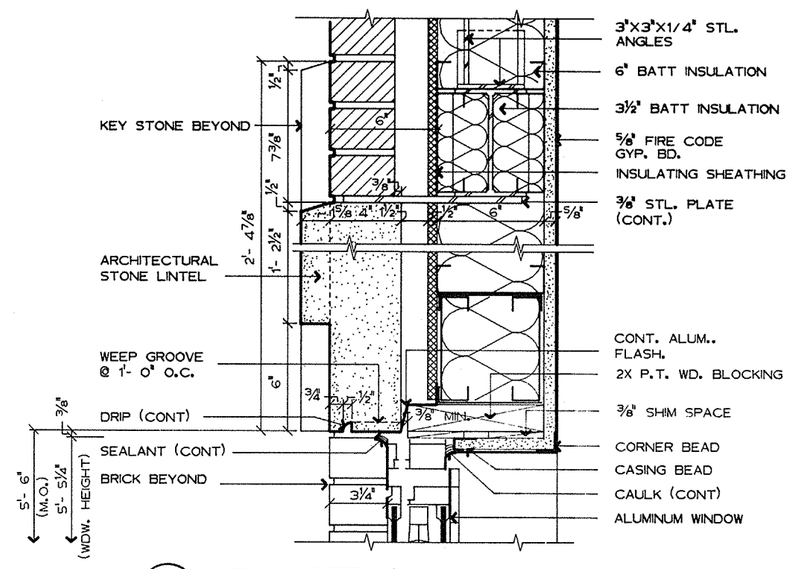

9 / 42-40 **HEAD DETAIL**
THREE INCHES EQUAL ONE FOOT

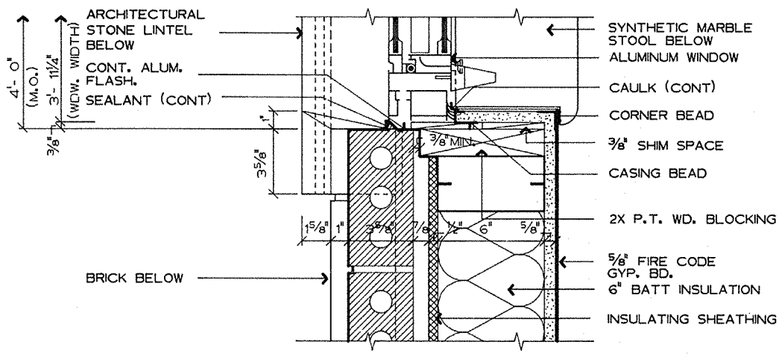

2 / 42-40 **JAMB DETAIL**
THREE INCHES EQUAL ONE FOOT

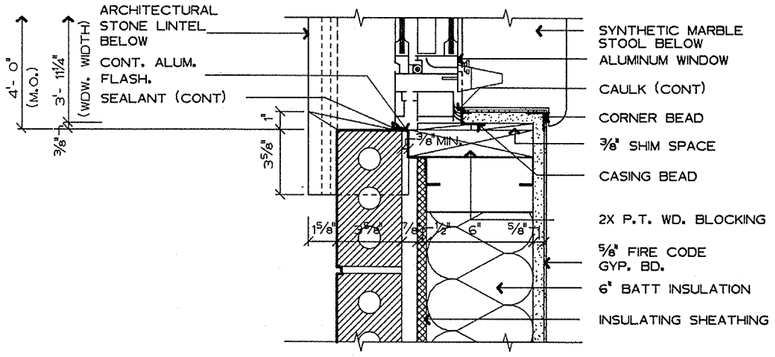

5 / 42-40 **JAMB DETAIL**
THREE INCHES EQUAL ONE FOOT

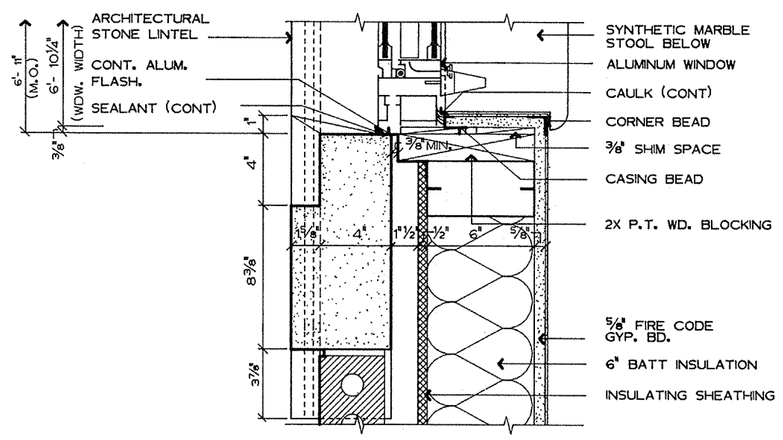

8 / 42-40 **JAMB DETAIL**
THREE INCHES EQUAL ONE FOOT

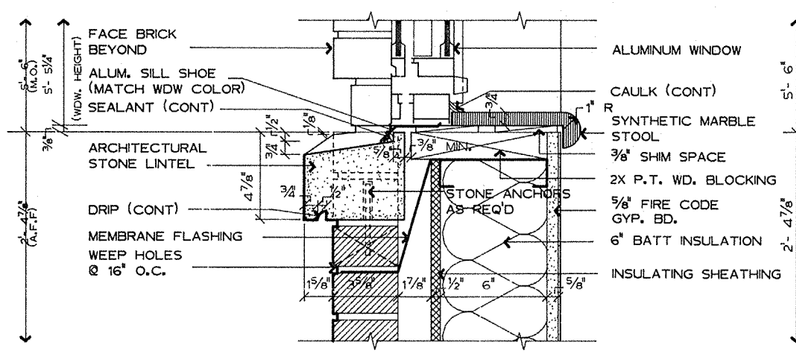

1 / 42-40 **SILL DETAIL**
THREE INCHES EQUAL ONE FOOT

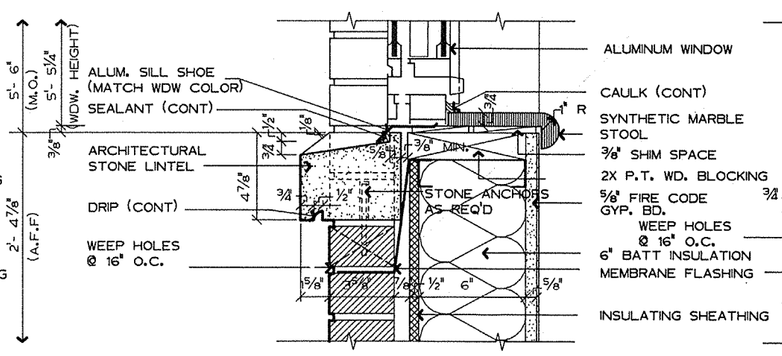

SILL DETAIL 4 / 42-40
THREE INCHES EQUAL ONE FOOT

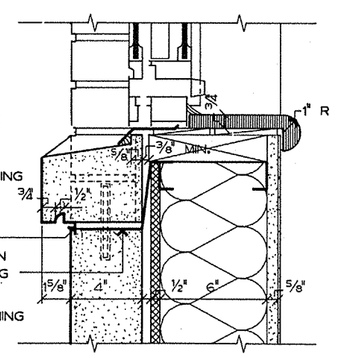

SILL DETAIL 4A / 42-40
THREE INCHES EQUAL ONE FOOT

NOTE: REFER TO DETAIL 4 FOR DIMENSIONS AND NOTES

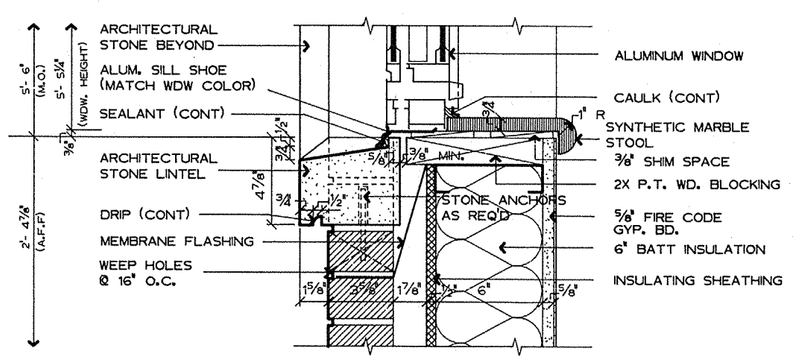

SILL DETAIL 7 / 42-40
THREE INCHES EQUAL ONE FOOT

Fully Sprinklered

Revisions	Date

2WR
Watson Watson Rutland / Architects Inc.
166 Commerce Street
P.O. Box 4834
Montgomery, Alabama 36104
205)263-6401

STATE OF ALABAMA — WATSON SR. WATSON JR. RUTLAND — REGISTERED ARCHITECTS

Drawing Title	Exterior Window Details
Approved: Area Project Manger	
Project Title	Relocate Regional Office to Department Owned Grounds
Building Number	42
Location	VMAC Montgomery,Al.
Date	27 JANUARY 92
Project No.	322-002
DRAWING NO.	42-40
Dwg. 64 Of 134	

Office of Facilities — Department of Veterans Affairs

© U.S. GOVERNMENT PRINTING OFFICE: 1994-440-467