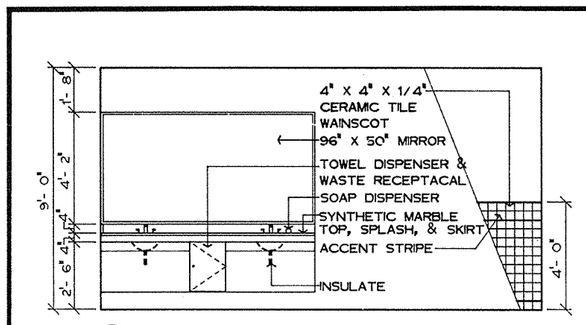

1 / 42-43 WOMEN
THREE EIGHTHS INCH EQUALS ONE FOOT

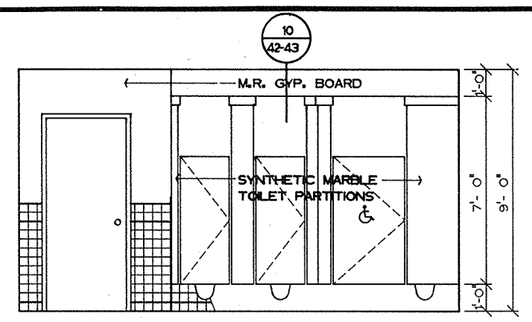

2 / 42-43 WOMEN
THREE EIGHTHS INCH EQUALS ONE FOOT

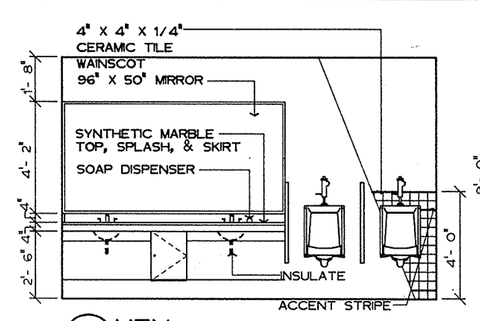

3 / 42-43 MEN
THREE EIGHTHS INCH EQUALS ONE FOOT

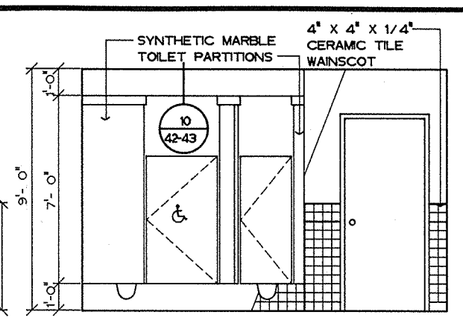

4 / 42-43 MEN
THREE EIGHTHS INCH EQUALS ONE FOOT

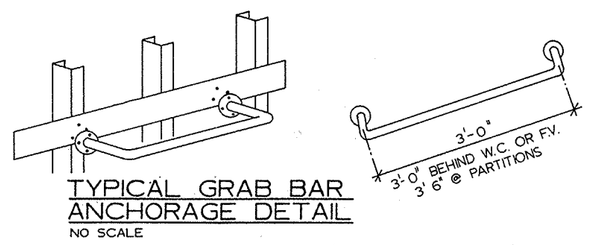

TYPICAL GRAB BAR ANCHORAGE DETAIL
NO SCALE

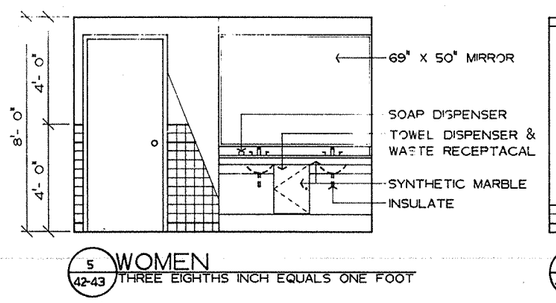

5 / 42-43 WOMEN
THREE EIGHTHS INCH EQUALS ONE FOOT

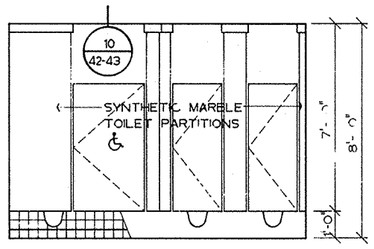

6 / 42-43 WOMEN
THREE EIGHTHS INCH EQUALS ONE FOOT

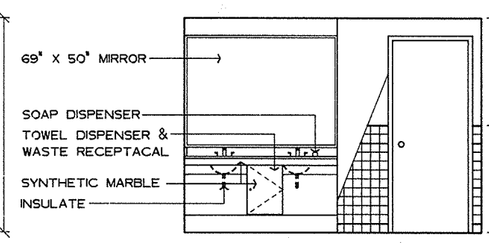

7 / 42-43 MEN
THREE EIGHTHS INCH EQUALS ONE FOOT

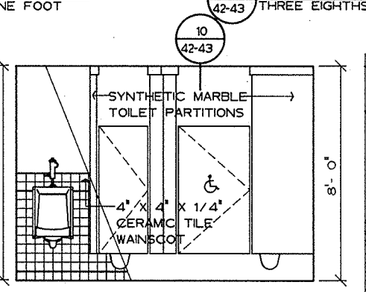

8 / 42-43 MEN
THREE EIGHTHS INCH EQUALS ONE FOOT

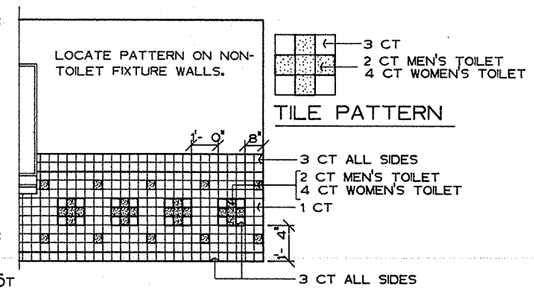

TILE PATTERN

CERAMIC TILE PATTERN IN TOILETS (TYP) N.T.S.

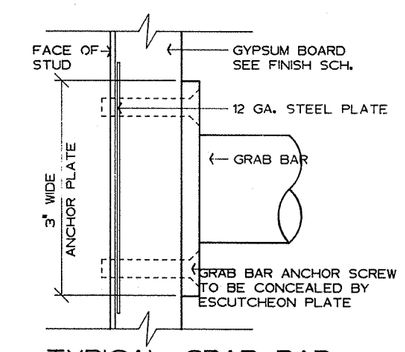

TYPICAL GRAB BAR ANCHORAGE DETAIL
FULL SIZE

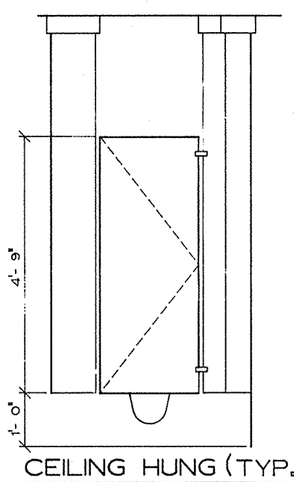

CEILING HUNG (TYP.) TOILET PARTITION
THREE QUARTER INCH EQUALS ONE FOOT

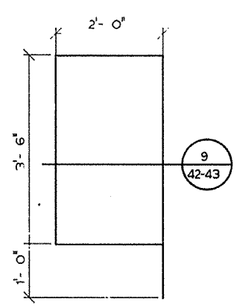

URINAL SCREEN (TYP.)
THREE QUARTER INCH EQUALS ONE FOOT

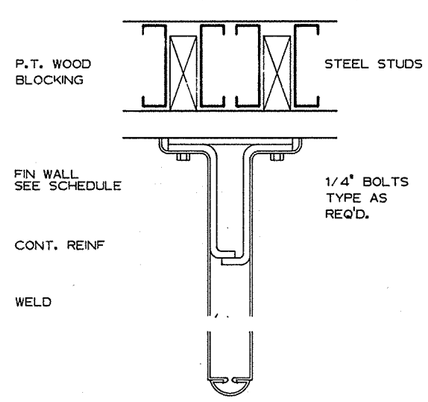

9 / 42-43 SECTION THRU WALL HUNG URINAL SCREEN
N.T.S.

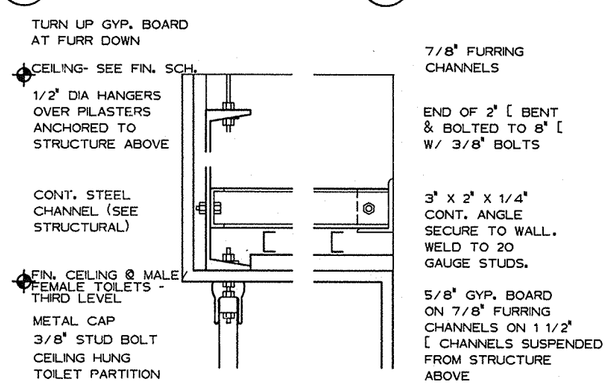

10 / 42-43 SECTION THRU CEILING HUNG TOILET PARTITION
THREE INCHES EQUAL ONE FOOT

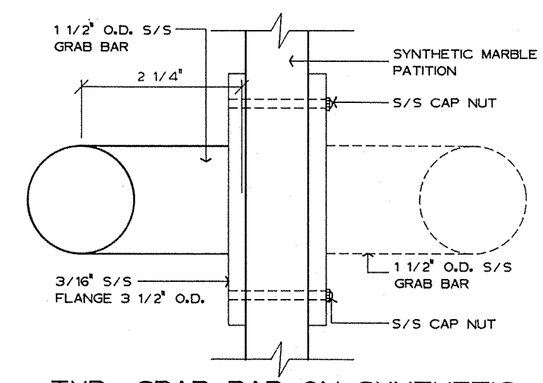

TYP. GRAB BAR ON SYNTHETIC MARBLE TOILET PARTITION
FULL SIZE

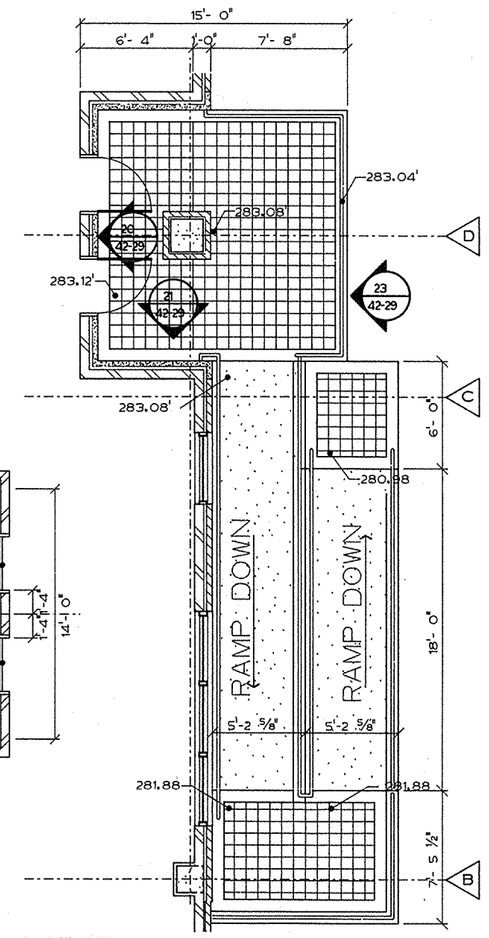

LARGE SCALE SOUTH ENTRANCE WITH HANDICAPPED RAMP
ONE QUARTER INCH EQUALS ONE FOOT

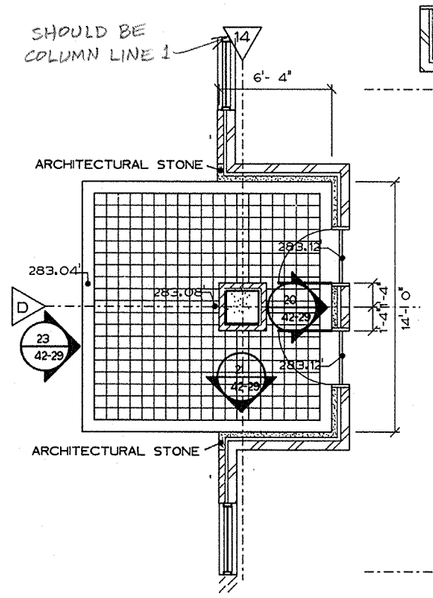

LARGE SCALE PLAN NORTH ENTRANCE
ONE QUARTER INCH EQUALS ONE FOOT

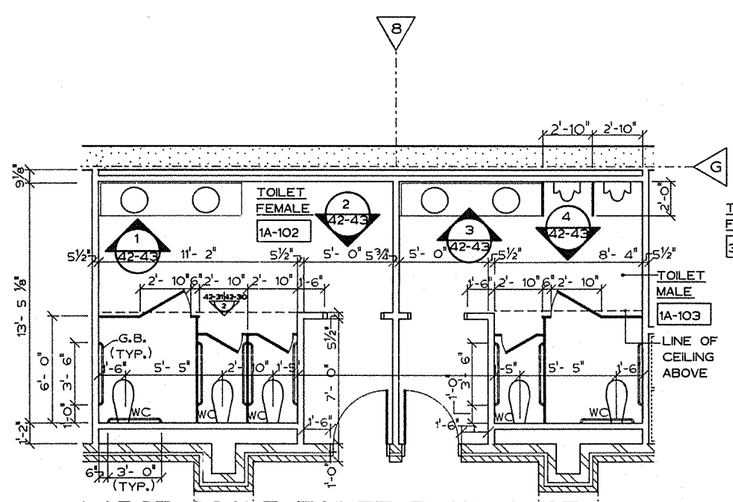

LARGE SCALE TOILET PLAN / 1ST AND 2ND LEVEL
ONE QUARTER INCH EQUALS ONE FOOT

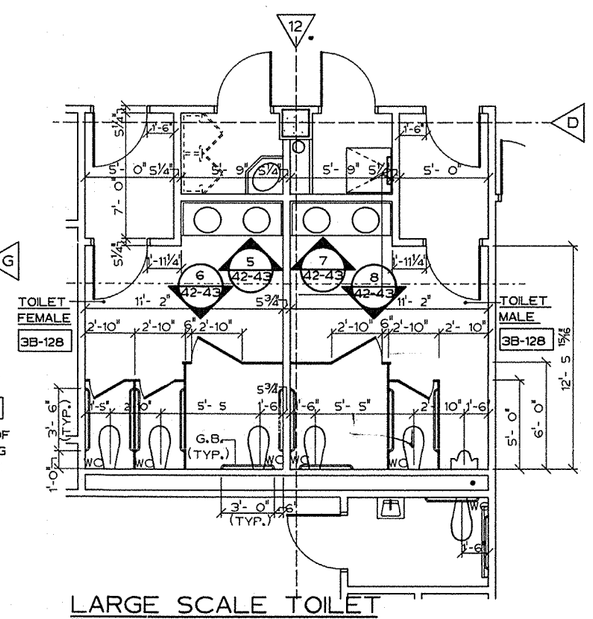

LARGE SCALE TOILET PLAN / THIRD LEVEL
ONE QUARTER INCH EQUALS ONE FOOT

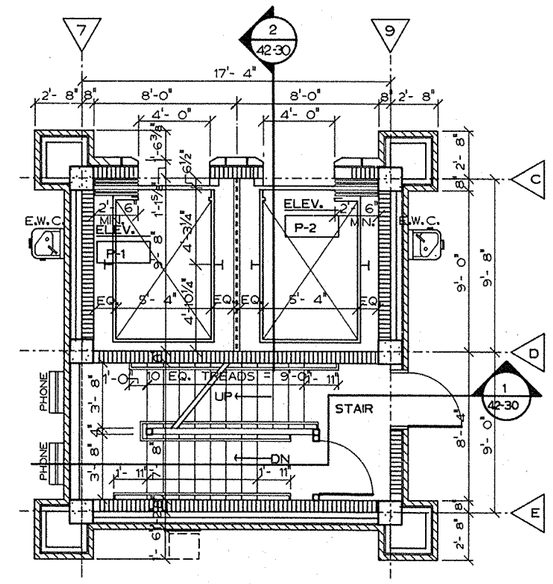

LARGE SCALE STAIR / ELEVATOR PLAN
ONE QUARTER INCH EQUALS ONE FOOT

Fully Sprinklered

Revisions	Date

2WR
Watson Watson Rutland / Architects Inc.
166 Commerce Street
P.O. Box 4834
Montgomery, Alabama 36104
205)263-6401

STATE OF ALABAMA — WATSON 5013 WATSON 1529 RUTLAND 2149 — REGISTERED ARCHITECTS

Drawing Title: Large Scale Plans/Toilet Elevations/Details

Approved: Area Project Manger

Project Title: Relocate Regional Office to Department Owned Grounds

Building Number: 42 | Checked | Drawn

Location: VMAC Montgomery,Al.

Date: 27 JANUARY 92

Project No. 322-002

DRAWING NO. 42-43

Dwg. 67 Of 134

Office of Facilities

Department of Veterans Affairs

VA FORM 08-6231A, JAN 1990

☆U.S. GOVERNMENT PRINTING OFFICE: 1994-440-467