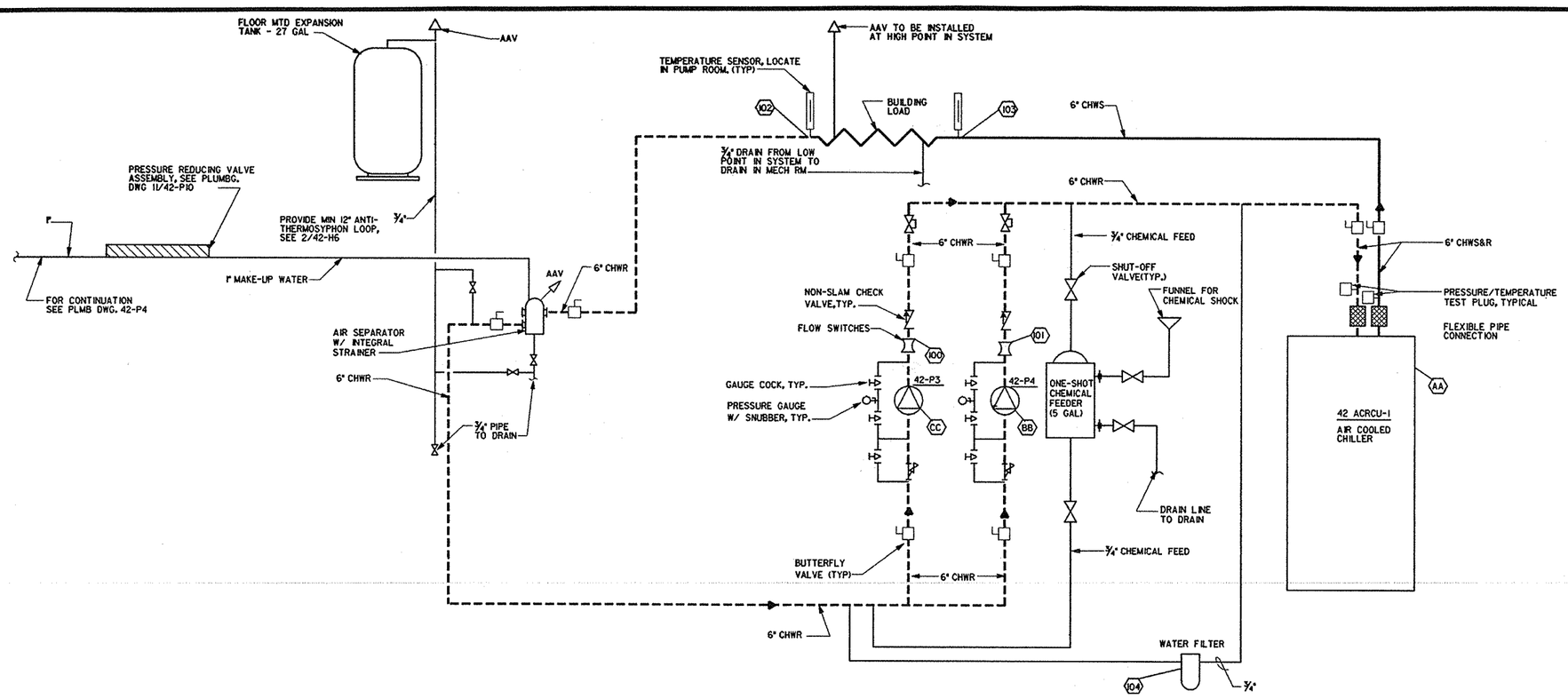

1 / 42-H8 CHILLED WATER FLOW DIAGRAM
SCHEMATIC ONLY

NOTES

① FOR SYMBOL LEGEND SEE 42-H1

② HEX SYMBOLS: X WHERE X=NO. → INDICATES PT INPUT TO DCP SYSTEM
X WHERE X=LETTER → INDICATES PT OUTPUT FROM DCP SYSTEM

ARE PROVIDED TO AID THE DCP SYSTEM INSTALLER AND MUST BE INCLUDED AS DCP SYSTEM PTS. THE HEX SYMBOLS DO NOT INDICATE ALL POINTS REQUIRED FOR THE DCP SYSTEM. REQ'D DCP SYSTEM PTS FOR THIS PROJECT MUST INCLUDE ANY PTS NEEDED BY THE DCP SYSTEM INSTALLER TO ACHIEVE ALL SEQUENCES OF OPERATION DESCRIBED ON SHT. 42-H1, AND ALL PTS REQUIRED TO ACHIEVE ANY CONTROL FEATURE DESCRIBED IN DIVISION 15000.

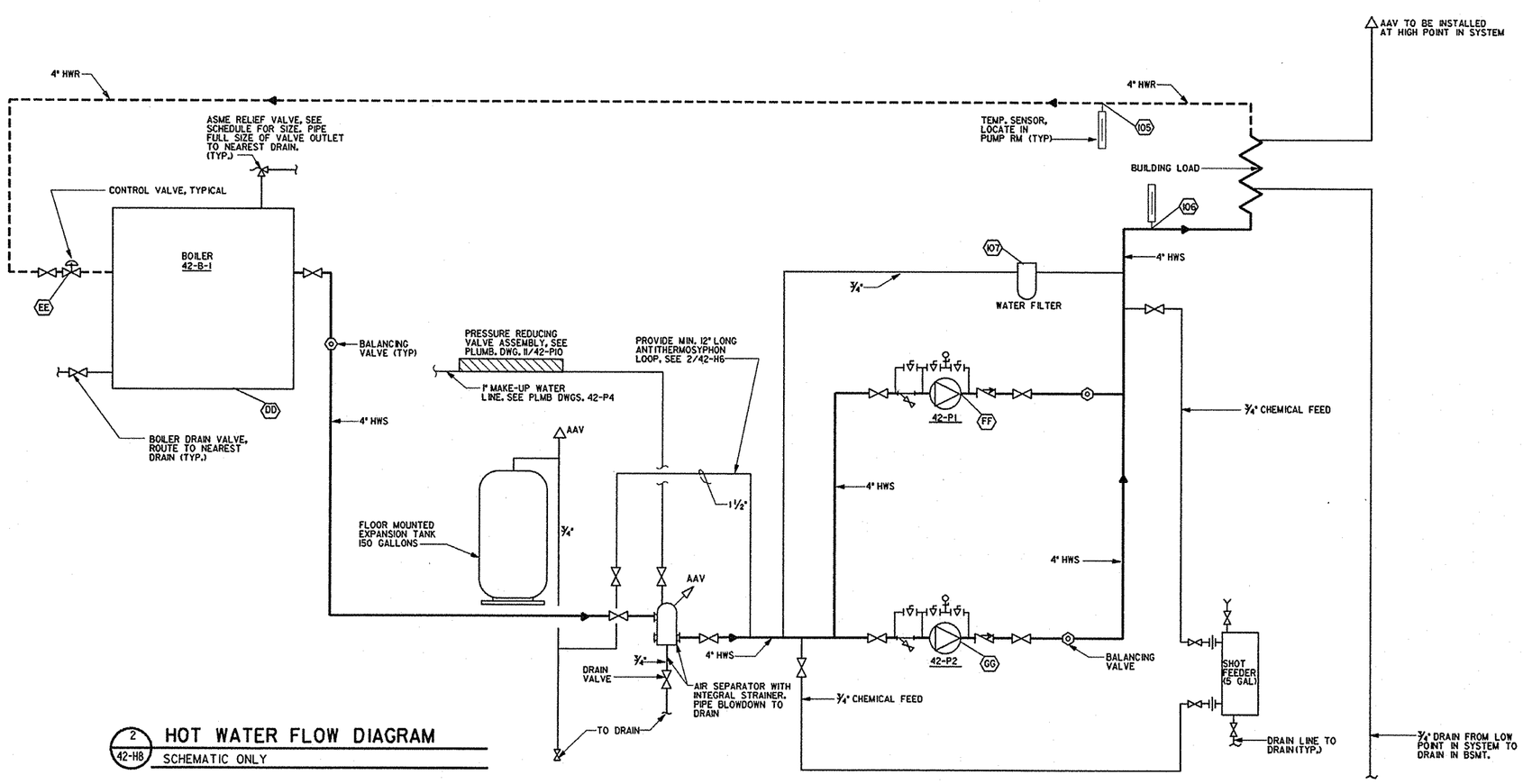

2 / 42-H8 HOT WATER FLOW DIAGRAM
SCHEMATIC ONLY

Fully Sprinklered

Revisions	Date

2WR
Watson Watson Rutland / Architects Inc.
166 Commerce Street
P.O. Box 4834
Montgomery, Alabama 36104
205)263-6401

STATE OF ALABAMA — WATSON 503 — WATSON 1428 — RUTLAND 2149 — REGISTERED ARCHITECTS

Drawing Title	Chilled and Hot Water Flow Diagrams
Approved: Area Project Manger	
Project Title	Relocate Regional Office to Department Owned Grounds
Building Number	42
Checked	
Drawn	
Location	VMAC Montgomery,Al.
Date	27 JANUARY 92
Project No.	322-002
DRAWING NO.	42-H8
Dwg 09 Of 34	

Office of Facilities — Department of Veterans Affairs

VA FORM 08-6231A, JAN 1990