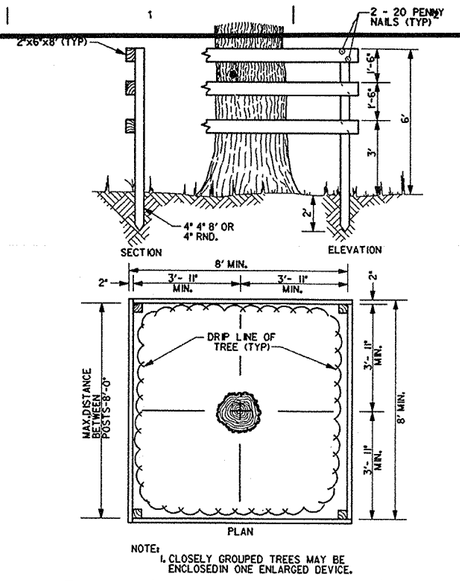

NOTE:
1. CLOSELY GROUPED TREES MAY BE ENCLOSEDIN ONE ENLARGED DEVICE.

8 / 42-L7 TREE PROTECTION DEVICE
NOT TO SCALE

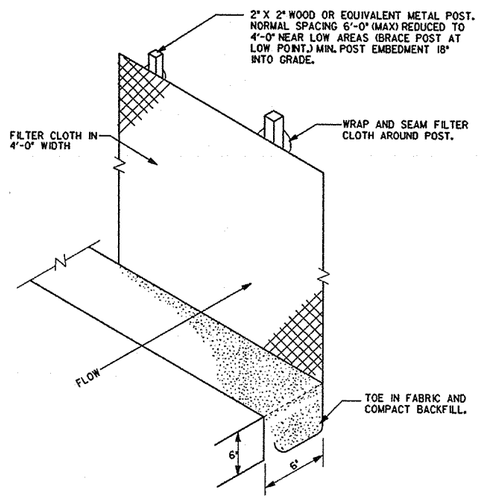

7 / 42-L7 SILTATION FENCING DETAIL
NOT TO SCALE

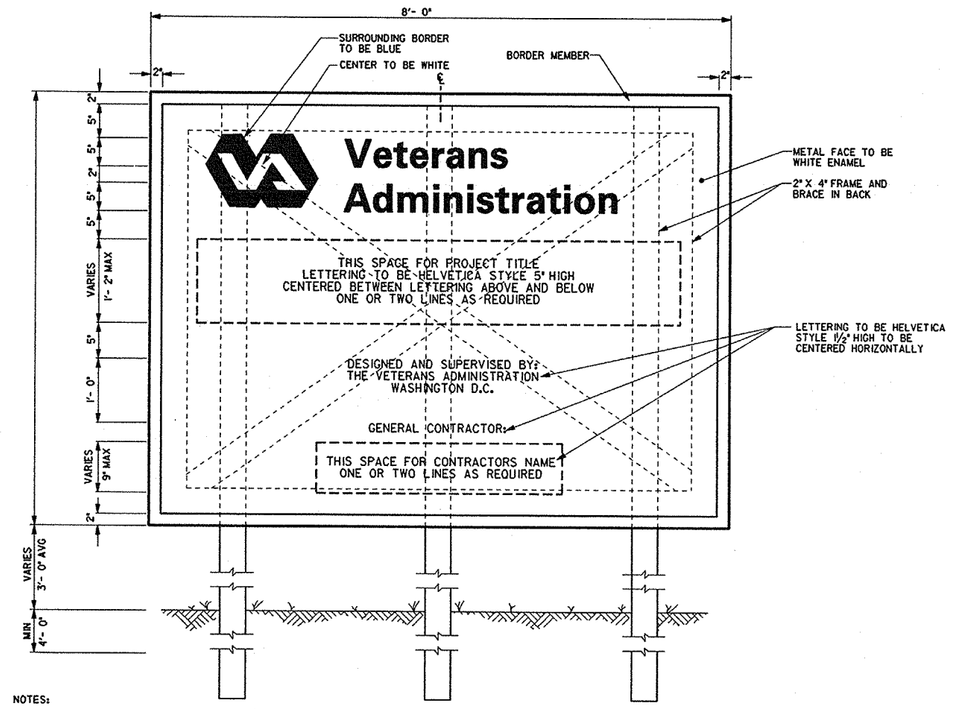

NOTES:
1. BOARD TO BE MADE OF 3/4 " EXTERIOR PLYWOOD.
2. BORDER MEMBERS TO BE PAINTED BLACK.
3. BACKGROUND TO BE PAINTED BLACK WITH ONE PRIME COAT AND TWO COATS OF WHITE ENAMEL.
4. ALL LETTERING TO BE PAINTED BLACK WITH EXCEPTION OF PROJECT TITLE WHICH IS TO BE BLUE.

4 / 42-L7 CONSTRUCTION SIGN
NOT TO SCALE

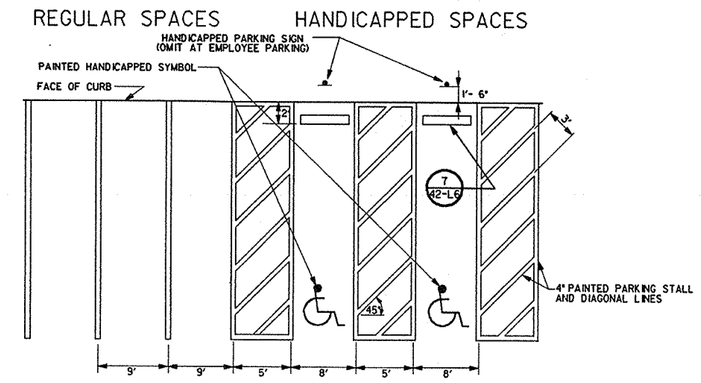

1 / 42-L7 PARKING STALL LAYOUT
NOT TO SCALE

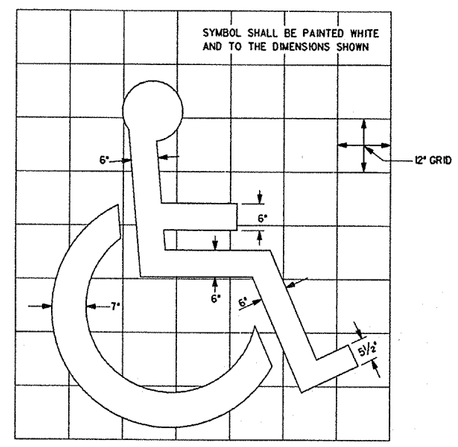

2 / 42-L7 HANDICAP SYMBOL PAINT DETAIL
NOT TO SCALE

PROVIDE AT EACH HANDICAP PARKING SPACE.

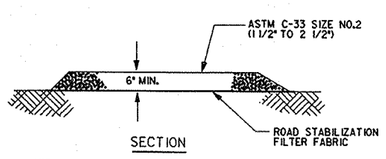

NOTE:
CONSTRUCTION ENTRANCE SHALL BE MAINTAINED IN A CONDITION WHICH WILL PREVENT TRACKING OR FLOWING OF SEDIMENT ONTO PUBLIC RIGHTS OF WAY. THE CONTRACTOR SHALL APPLY PERIODIC TOP DRESSING WITH ADDITIONAL STONE AS CONDITIONS DEMAND OR AS LOCAL AUTHORITIES REQUIRE.

10 / 42-L7 TEMPORARY GRAVEL CONSTRUCTION ENTRANCE
NOT TO SCALE

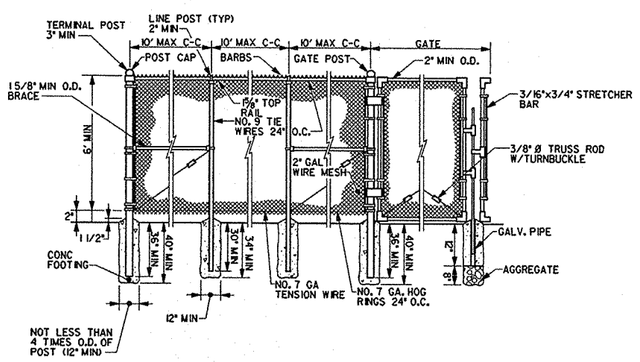

9 / 42-L7 CHAIN LINK FENCE
NOT TO SCALE

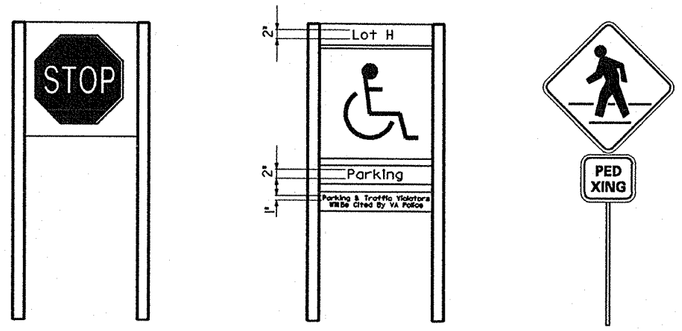

STOP SIGN
PANEL - SQUARE 1¾" X 24" X 24"
POST - 1¾" X 4" MIN.
SPECIAL DATA - BACKGROUND SHALL BE WHITE REFLECTIVE WITH INTERNATIONAL SYMBOL IN RED AND WHITE

HANDICAPPED SIGN
PANEL - 1½" X 24" X 24"
AUXILIARY PANEL - 1¾" X 4" X 24"
POST - 1¾" X 4"
COPY - AS SHOWN
SPECIAL DATA - BLUE BACKGROUND WITH INTERNATIONAL SYMBOL IN WHITE

PEDESTRIAN CROSSING
W11-2
30" X 30"
24" X 18"

5 / 42-L7 TYPICAL SIGN DETAILS
NOT TO SCALE

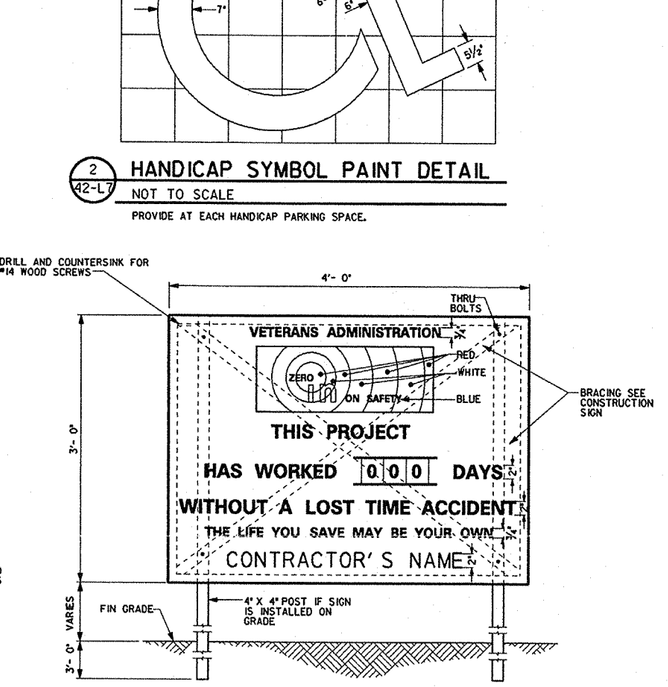

3 / 42-L7 SAFETY SIGN
NOT TO SCALE

NOTES:
1. BOARD TO BE MADE OF 3/4 " EXTERIOR PLYWOOD.
2. BOARD TO BE PAINTED WITH ONE PRIME COAT AND TWO COATS OF WHITE ENAMEL.
3. LETTERING TO BE IN BLACK ENAMEL EXCEPT AS NOTED.
4. THREE (3) SETS OF REMOVABLE NUMERALS PAINTED ON 1/8 " TEMPERED PRESSED HARDBOARD SHALL BE PROVIDED.
5. SIGN TO BE LOCATED ON OR NEAR THE PRIME CONTRACTOR'S OFFICE.

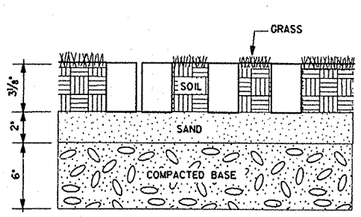

12 / 42-L7 DETAIL - TURFBLOCK PAVING
NOT TO SCALE

NOTES:
ACCEPTABLE TURFBLOCK PAVER PRODUCTS SHALL BE AS MANUFACTURED BY (OR EQUAL)
1. CON-PAVE (SRM SELMA, INC.)
2. PAVER SYSTEMS
3. BOMANITE CORP.
ECO-STONE
TURF-STONE
GRASS-CRETE

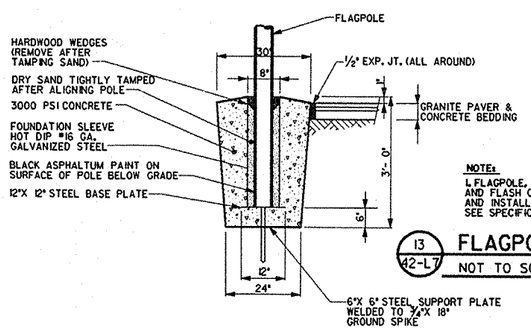

NOTE:
1. FLAGPOLE, BALL, TRUCK, HALYARDS, CLEATS, AND FLASH COLLAR SHALL BE FURNISHED AND INSTALLED IN THIS CONTRACT. SEE SPECIFICATIONS FOR MODEL TYPE.

13 / 42-L7 FLAGPOLE FOUNDATION
NOT TO SCALE

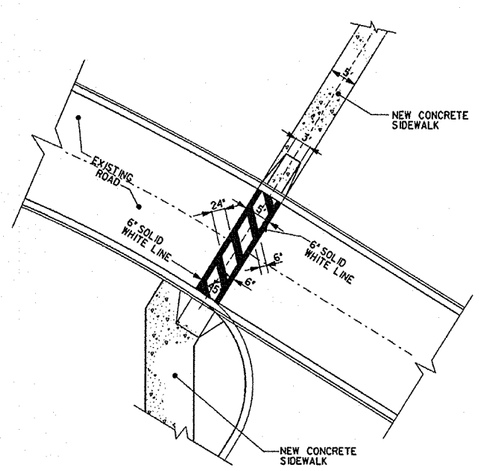

11 / 42-L7 STRIPING DETAIL
NOT TO SCALE

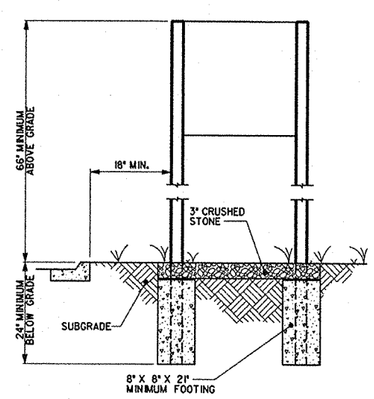

TYPICAL SIGN INSTALLATION DETAIL

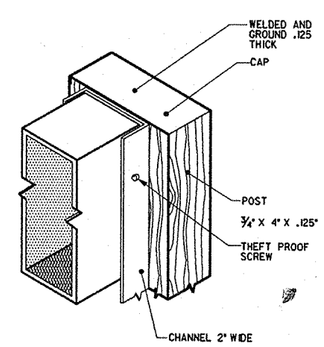

TYPICAL POST & PANEL ASSEMBLY DETAIL

6 / 42-L7 SIGN INSTALLATION AND ASSEMBLY DETAIL
NOT TO SCALE

Fully Sprinklered

Revisions	Date

2WR
Watson Watson Rutland / Architects Inc.
166 Commerce Street
P.O. Box 4834
Montgomery, Alabama 36104
205)263-6401

STATE OF ALABAMA WATSON 533 WATSON 1828 RUTLAND 2149 REGISTERED ARCHITECTS

Drawing Title: Miscellaneous Site Details	Project Title: Relocate Regional Office to Department Owned Grounds		Date: 27 JANUARY 92
Approved: Area Project Manger			Project No. 322-002
	Building Number 42	Checked / Drawn	DRAWING NO. 42-L7
	Location VMAC Montgomery, Al.		Dwg 10 Of 134

Office of Facilities
Department of Veterans Affairs

VA FORM 08-6231A, JAN 1990