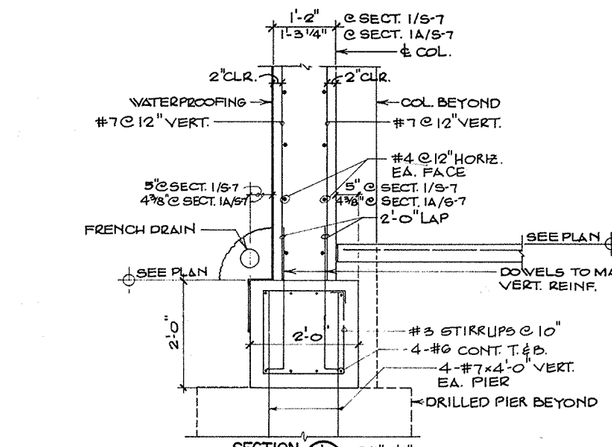

SECTION (1/S-7) 3/4" = 1'-0" AS SHOWN

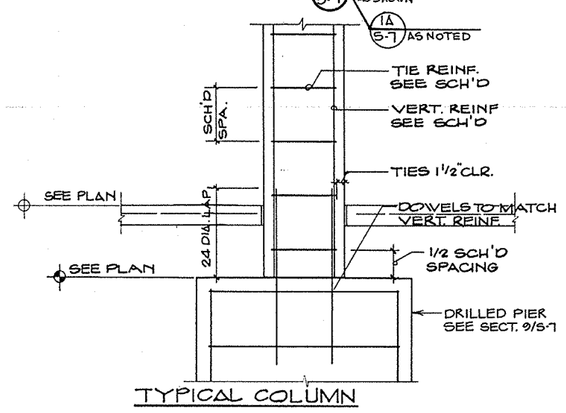

TYPICAL COLUMN

SECTION (4/S-7) 3/4" = 1'-0"

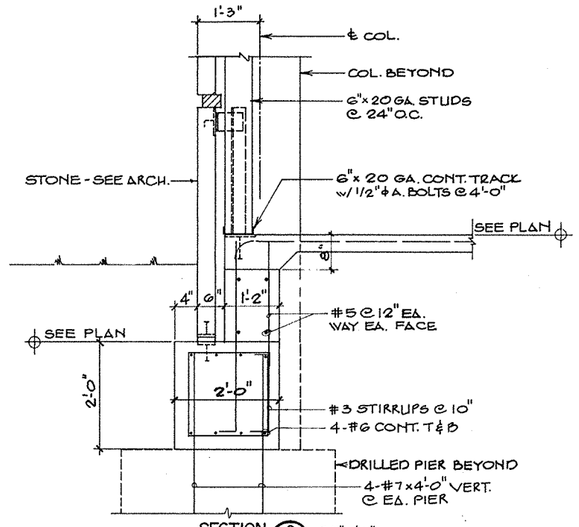

SECTION (2/S-7) 3/4" = 1'-0"

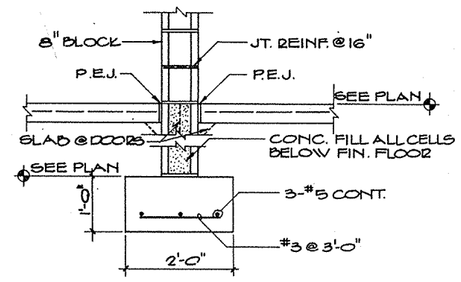

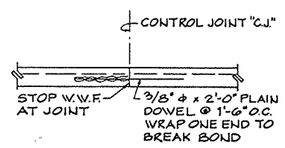

SECTION (5/S-7) 3/4" = 1'-0"

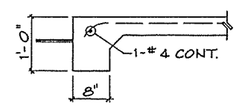

SECTION (6/S-7) 3/4" = 1'-0"

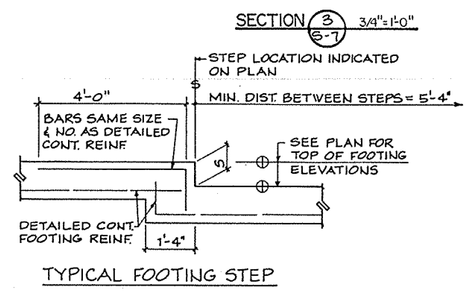

SECTION (3/S-7) 3/4" = 1'-0"

TYPICAL FOOTING STEP

DETAIL (7/S-7) NO SCALE

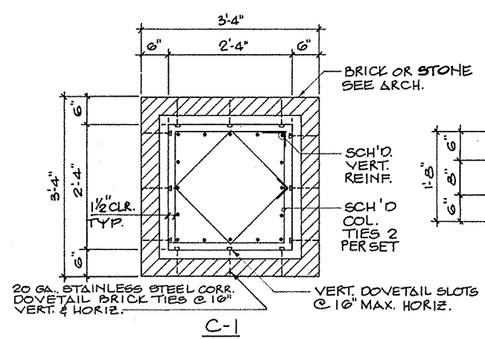

C-1

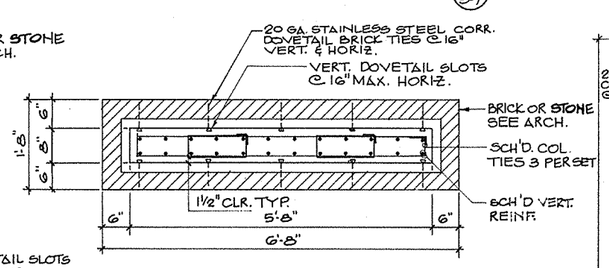

C-2

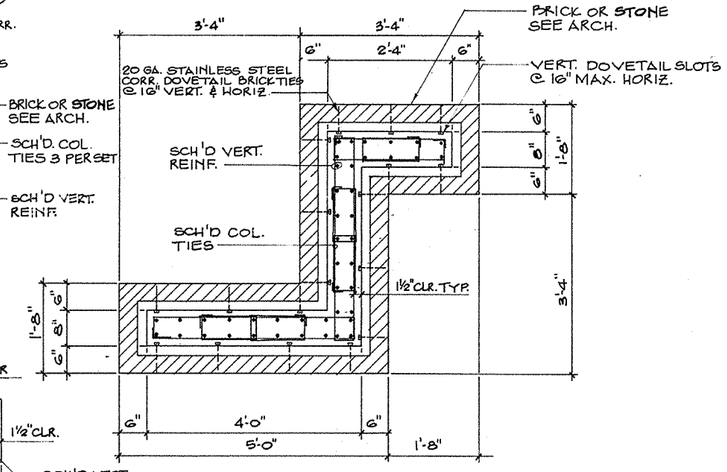

C-3

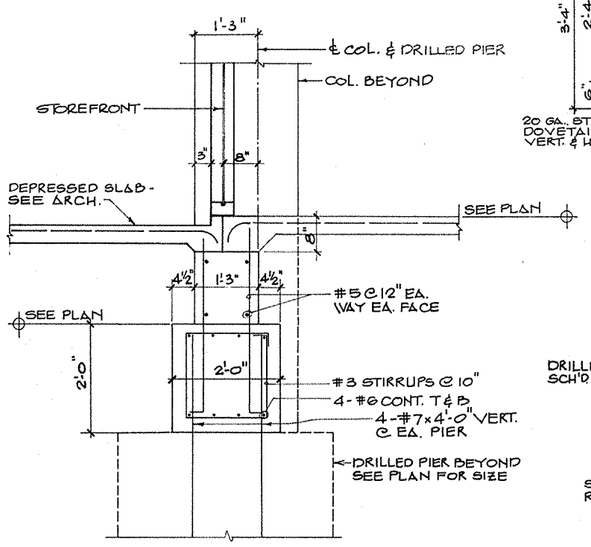

SECTION (8/S-7) 3/4" = 1'-0"

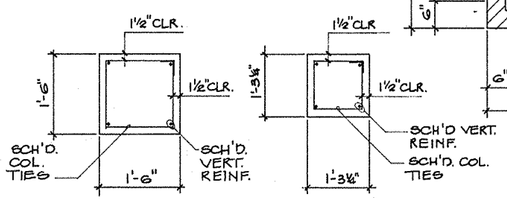

C-4

C-5

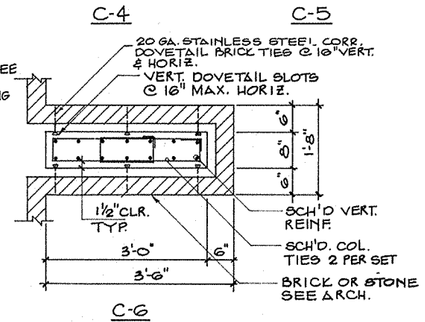

C-6

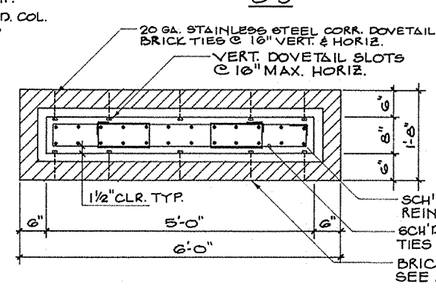

C-7

COLUMN TYPES

3/4" = 1'-0"

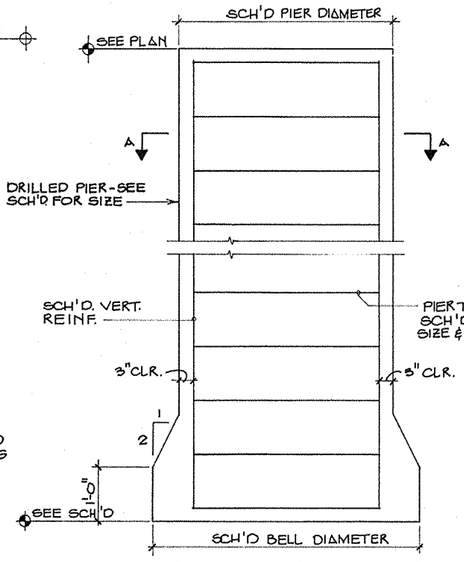

TYPICAL DRILLED PIER

SECTION (9/S-7) 3/4" = 1'-0"

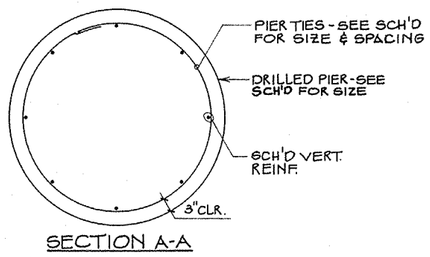

SECTION A-A

STRUCTURAL NOTES

APPLICABLE CODES AND SPECIFICATIONS

UNIFORM BUILDING CODE
AMERICAN CONCRETE INSTITUTE
AMERICAN INSTITUTE OF STEEL CONSTRUCTION
AMERICAN IRON AND STEEL INSTITUTE
AMERICAN SOCIETY FOR TESTING AND MATERIALS
AMERICAN WELDING SOCIETY
NATIONAL CONCRETE MASONRY ASSOCIATION

DESIGN LOADS

A. ROOF LIVE LOAD (ON HORIZONTAL PROJECTION) ------- 20 psf

B. FLOOR LIVE LOAD

STAIRS	100 psf
MECHANICAL	150 psf
PENTHOUSE	150 psf
OFFICES, STORAGE, RECORDS	250 psf

C. WIND LOAD

BASIC WIND VELOCITY	80 mph
BASIC WIND LOAD PRESSURE (q) 0 - 50 FT.	19 psf

D. SEISMIC
ZONE ---------- 0

FOUNDATIONS

DRILLED PIER FOUNDATIONS ARE DESIGNED AS END BEARING PIERS WITH A NET ALLOWABLE END BEARING PRESSURE OF 12,000 psf. PIERS ARE DESIGNED TO BEAR IN THE FIRM TO DENSE SILTY SAND WITH A MINIMUM "N" VALUE GREATER THAN 40.

FOOTINGS ARE DESIGNED FOR A MAXIMUM SOIL BEARING PRESSURE OF 3500 psf FOR SQUARE COLUMN FOOTINGS AND 3000 psf FOR CONTINUOUS WALL FOOTINGS. FOOTINGS SHALL BE PLACED ON A FIRM STRATA CAPABLE OF SAFELY SUSTAINING THESE LOADS.

FOOTING ELEVATIONS SHOWN ON PLAN ARE MINIMUM DEPTH.

UNUSUAL SOILS CONDITIONS MAY REQUIRE CHANGE IN FOOTING ELEVATION. CONTACT ARCHITECT AND/OR ENGINEER FOR APPROVAL TO CHANGE ELEVATION.

SLAB ON GRADE

UNLESS OTHERWISE NOTED, ALL SLABS ON GRADE SHALL BE REINFORCED WITH ONE LAYER 6X6-W2.9XW2.9 W.W.F. PLACED AT 1/3 SLAB THICKNESS FROM TOP.

FILL UNDER SLAB SHALL BE COMPACTED TO 98% STANDARD PROCTOR DENSITY (ASTM D-698). SEE SPECIFICATIONS FOR COMPACTION AND TESTING REQUIREMENTS.

CONCRETE (CAST-IN-PLACE)

MINIMUM COMPRESSIVE STRENGTH OF CAST-IN-PLACE CONCRETE AT 28 DAYS SHALL BE:

FOUNDATIONS AND RETAINING WALLS	3000 psi
SLAB ON GRADE	3000 psi
DRILLED PIERS & GRADE BEAMS	4000 psi
STRUCTURAL SLAB	4000 psi
COLUMNS	4000 psi
BEAMS	4000 psi

SEE SPECIFICATIONS FOR TESTING REQUIREMENTS.

REINFORCING STEEL

REINFORCING BARS SHALL BE DEFORMED BILLET STEEL BARS CONFORMING TO ASTM A615 SPECIFICATIONS. WELDED STEEL WIRE FABRIC SHALL BE PLAIN STEEL WIRE CONFORMING TO ASTM A185 SPECIFICATIONS.

MINIMUM YIELD STRENGTHS (fy) SHALL BE AS FOLLOWS:

REINFORCING BARS	60,000 psi
BEAM STIRRUPS, AND COLUMN TIES	40,000 psi
WELDED WIRE FABRIC	65,000 psi

UNLESS OTHERWISE DETAILED, PROTECTIVE CONCRETE COVER FOR REINFORCING STEEL SHALL NOT BE LESS THAN:

(a)	CAST AGAINST AND PERMANENTLY EXPOSED TO EARTH	3 in.
(b)	EXPOSED TO EARTH OR WEATHER	
	#6 BARS AND LARGER	2 in.
	#5 BARS AND SMALLER	1-1/2 in.
(c)	NOT EXPOSED TO EARTH OR WEATHER	
	SLABS, WALLS AND JOISTS	3/4 in.
	BEAMS AND COLUMNS (STIRRUPS OR TIES)	1-1/2 in.

LAP ALL CONTINUOUS REINFORCEMENT 24 DIAMETERS MINIMUM, UNLESS OTHERWISE NOTED. AT CORNERS AND INTERSECTIONS, PROVIDE HOOKS OR CORNER BARS.

DOWEL ALL FOOTINGS, GRADE BEAMS AND WALLS, WHERE THEY ABUT, WITH SAME STEEL AS DETAILED HORIZONTAL REINFORCEMENT, 24 DIAMETERS MINIMUM LAP.

MASONRY

HOLLOW CONCRETE MASONRY UNITS, WHEN USED IN BEARING WALLS, SHALL CONFORM TO THE REQUIREMENTS OF ASTM C90. MORTAR SHALL BE TYPE N, WITH A MINIMUM COMPRESSIVE STRENGTH AT 28 DAYS OF 750 psi, OR HIGHER.

SEE ARCHITECTURAL DRAWINGS FOR LOCATIONS AND DETAILS OF MASONRY CONTROL JOINTS. LOCATE CONTROL JOINTS AT EACH CONCRETE COLUMN AND 30'-0" MAXIMUM EXCEPT WHEN SHOWN CLOSER ON ARCHITECTURAL.

HORIZONTAL JOINT REINFORCEMENT SHALL BE FOR TOTAL WIDTH OF SINGLE AND MULTIPLE UNIT WALLS, AND SHALL BE SPACED VERTICALLY AS INDICATED ON DRAWINGS.

ALL U-BLOCK BEAMS SHALL BE REINFORCED AS INDICATED ON DRAWINGS, HOOKED AT CORNERS AND INTERSECTIONS. WHERE BOND BEAM REINFORCEMENT INTERSECTS STEEL BEAMS OR COLUMNS, REINFORCEMENT SHALL BE WELDED TO OR CONTINUOUS THRU BEAM OR COLUMN.

STRUCTURAL STEEL

MINIMUM MATERIAL STRENGTHS SHALL BE AS FOLLOWS:

STRUCTURAL STEEL	36 ksi yield point
COLD FORMED STUDS	33 ksi yield point
ANCHOR BOLTS	A-36
BOLTED STRUCTURAL JOINTS	A-325X
WELD ELECTRODES	E70XX

UNLESS OTHERWISE NOTED OR DETAILED, ALL CONNECTIONS ARE FOR TYPE 2 CONSTRUCTION AND SHALL BE DESIGNED USING THE APPROPRIATE DATA FROM PART 4, AISC MANUAL OF STEEL CONSTRUCTION, NINTH EDITION. DESIGN END REACTION IS 60% OF TOTAL ALLOWABLE LOAD (60% Wc/L) FROM PART 2, AISC.

PRECAST CONCRETE

ALL PRECAST CONCRETE ELEMENTS SHALL BE DESIGNED, FABRICATED AND ERECTED IN STRICT ACCORDANCES WITH APPLICABLE CODES AND SPECIFICATIONS TO SUPPORT ALL LIVE LOADS NOTED ABOVE, DEAD LOADS AND CONCENTRATED LOADS.

VERIFY ALL DIMENSIONS AND DETAILS SHOWN. NOTIFY ARCHITECT AND/OR ENGINEER OF ANY REQUIRED MODIFICATIONS.

SUBMIT DESIGN DRAWINGS BEARING THE ENGINEER'S REGISTRATION SEAL OF THE DESIGN ENGINEER.

SHOP DRAWINGS

SUBMIT FOR REVIEW TO THE ARCHITECT AND/OR ENGINEER, IN ACCORDANCE WITH THE SPECIFICATIONS, AS FOLLOWS:

1. PLACING PLANS AND DETAILS OF CONCRETE REINFORCEMENT, IN ACCORDANCE WITH THE ACI DETAILING MANUAL (ACI 315).
2. LAYOUT AND DETAILS OF ALL STRUCTURAL STEEL AND MISCELLANEOUS STEEL.
3. LAYOUT AND DETAILS OF ALL PRECAST CONCRETE ELEMENTS.

SUBMITTAL SHALL BEAR THE APPROVAL STAMP OF THE CONTRACTOR, VERIFYING THAT THE DIMENSIONS AND DETAILS COMPLY WITH THE CONTRACT DRAWINGS.

ALABAMA REGISTERED PROFESSIONAL ENGINEER GORDON L. DAVIS

DAVIS ENGINEERING, INC.
CONSULTING STRUCTURAL ENGINEERS
POST OFFICE BOX 4216
MONTGOMERY, ALABAMA 36103
(205) 265-3366

Fully Sprinklered

2WR
Watson Watson Rutland / Architects Inc.
166 Commerce Street
P.O. Box 4834
Montgomery, Alabama 36104
205)263-6401

STATE OF ALABAMA — WATSON 503 WATSON 1629 RUTLAND 2149 — REGISTERED ARCHITECTS

Drawing Title	Foundation Details
Approved: Area Project Manger	
Project Title	Relocate Regional Office to Department Owned Grounds
Building Number	42
Checked	G.L.D.
Drawn	J.H.F.
Location	VMAC Montgomery,Al.
Date	27 JANUARY 92
Project No.	322-002
DRAWING NO.	S-7
Dwg 80 of 134	

Office of Facilities — Department of Veterans Affairs

Revisions | Date

VA FORM 08-6231A, JAN 1990

U.S. GOVERNMENT PRINTING OFFICE: 1984-440-467