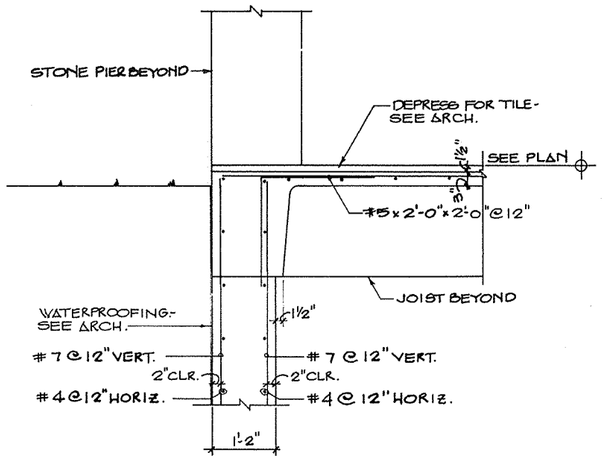

SECTION 1 (S-10) 3/4"=1'-0"

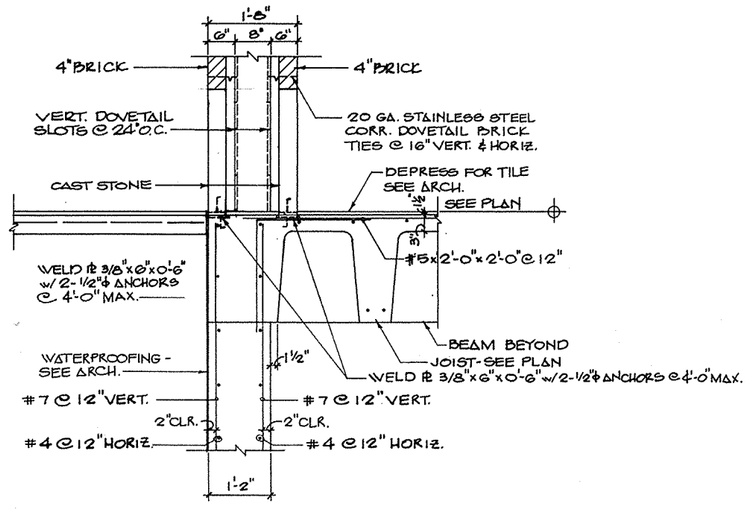

SECTION 2 (S-10) 3/4"=1'-0"

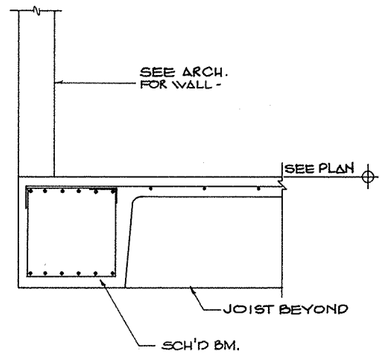

SECTION 3 (S-10) 3/4"=1'-0"

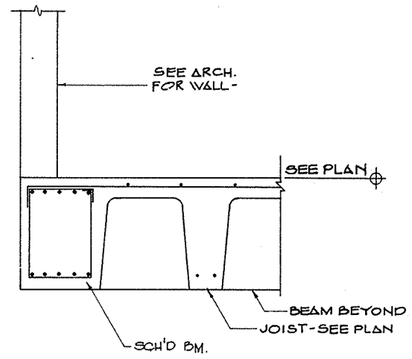

SECTION 4 (S-10) 3/4"=1'-0"

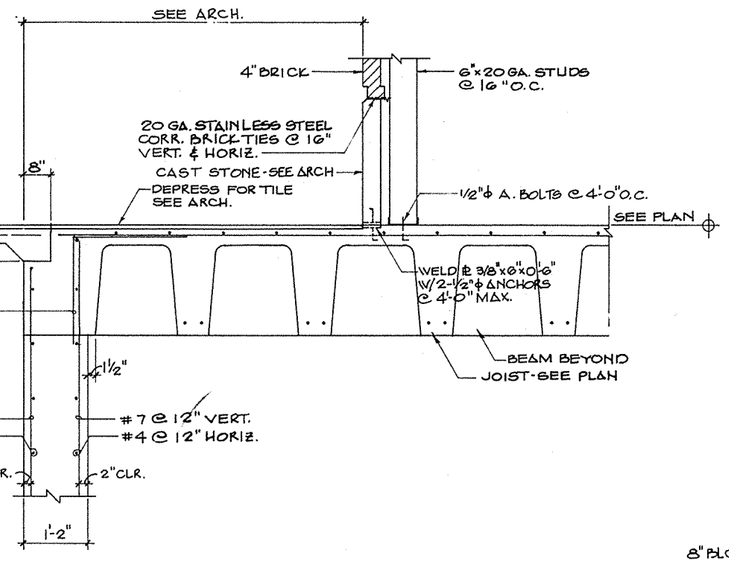

SECTION 5 (S-10) 3/4"=1'-0"

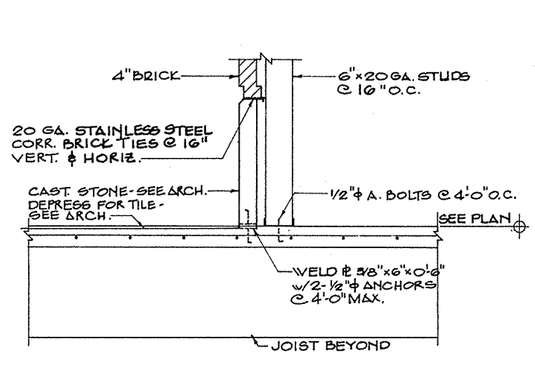

SECTION 6 (S-10) 3/4"=1'-0"

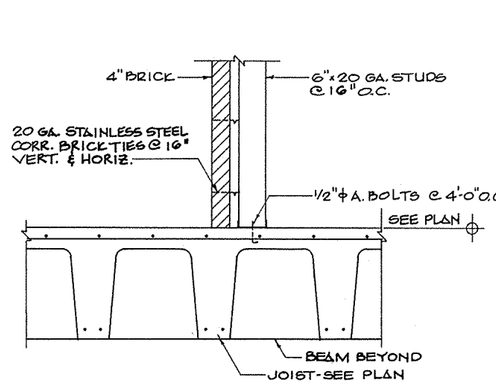

SECTION 7 (S-10) 3/4"=1'-0"

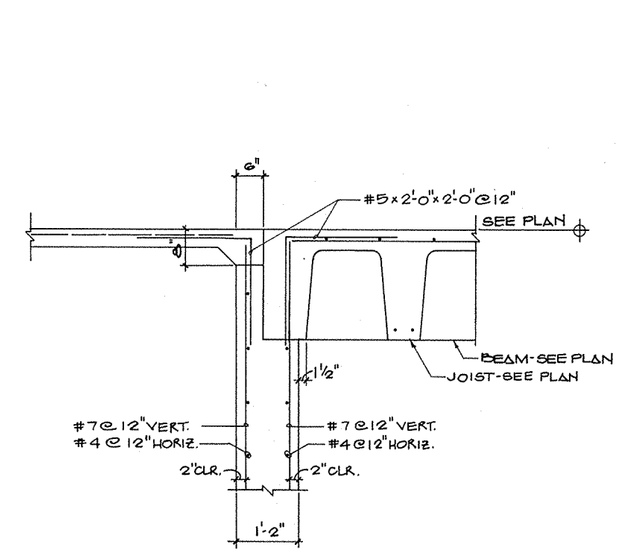

SECTION 8 (S-10) 3/4"=1'-0"

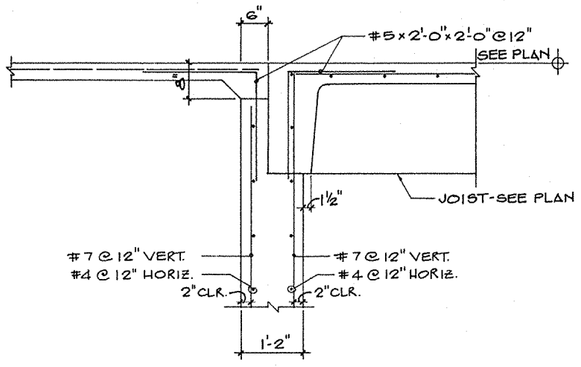

SECTION 9 (S-10) 3/4"=1'-0"

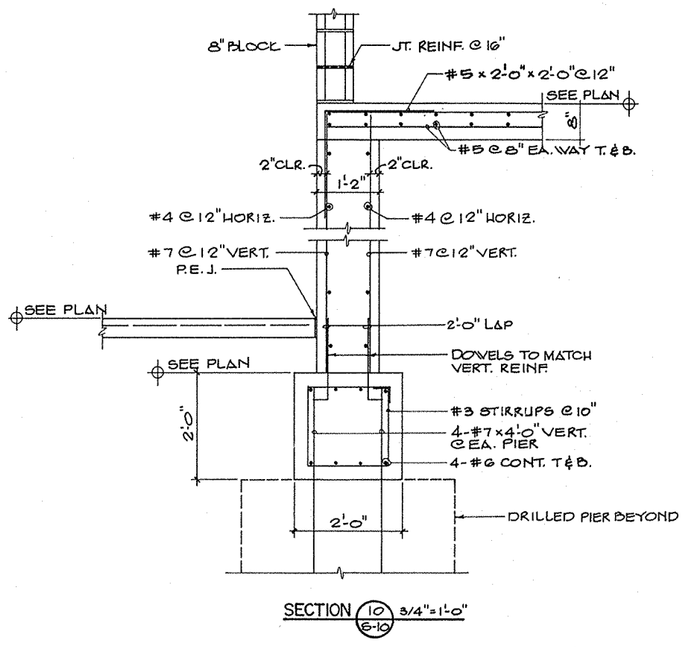

SECTION 10 (S-10) 3/4"=1'-0"

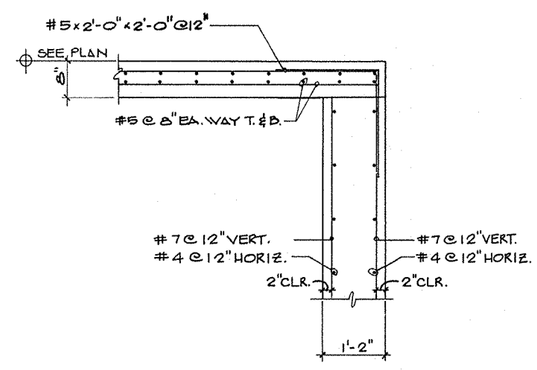

SECTION 11 (S-10) 3/4"=1'-0"

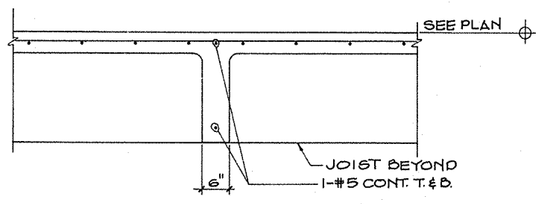

TYPICAL DISTRIBUTION RIB

SECTION 12 (S-10) 3/4"=1'-0"

DAVIS ENGINEERING, INC.
CONSULTING STRUCTURAL ENGINEERS
POST OFFICE BOX 8216
MONTGOMERY, ALABAMA 36103
(205) 265-3366

Fully Sprinklered

Revisions / Date	

2WR
Watson Watson Rutland / Architects Inc.
166 Commerce Street
P.O. Box 4834
Montgomery, Alabama 36104
205)263-6401

STATE OF ALABAMA — WATSON 503 — WATSON 529 — RUTLAND 2149 — REGISTERED ARCHITECTS

Drawing Title	Floor Framing Details
Approved: Area Project Manger	
Project Title	Relocate Regional Office to Department Owned Grounds
Building Number	42
Checked	G.L.D.
Drawn	J.H.F.
Location	VMAC Montgomery, Al.
Date	27 JANUARY 92
Project No.	322-002
DRAWING NO.	S-10
Dwg. 83 of 134	

Office of Facilities — Department of Veterans Affairs

VA FORM 08-6231A, JAN 1990

GPO 1990 0-264-440-46