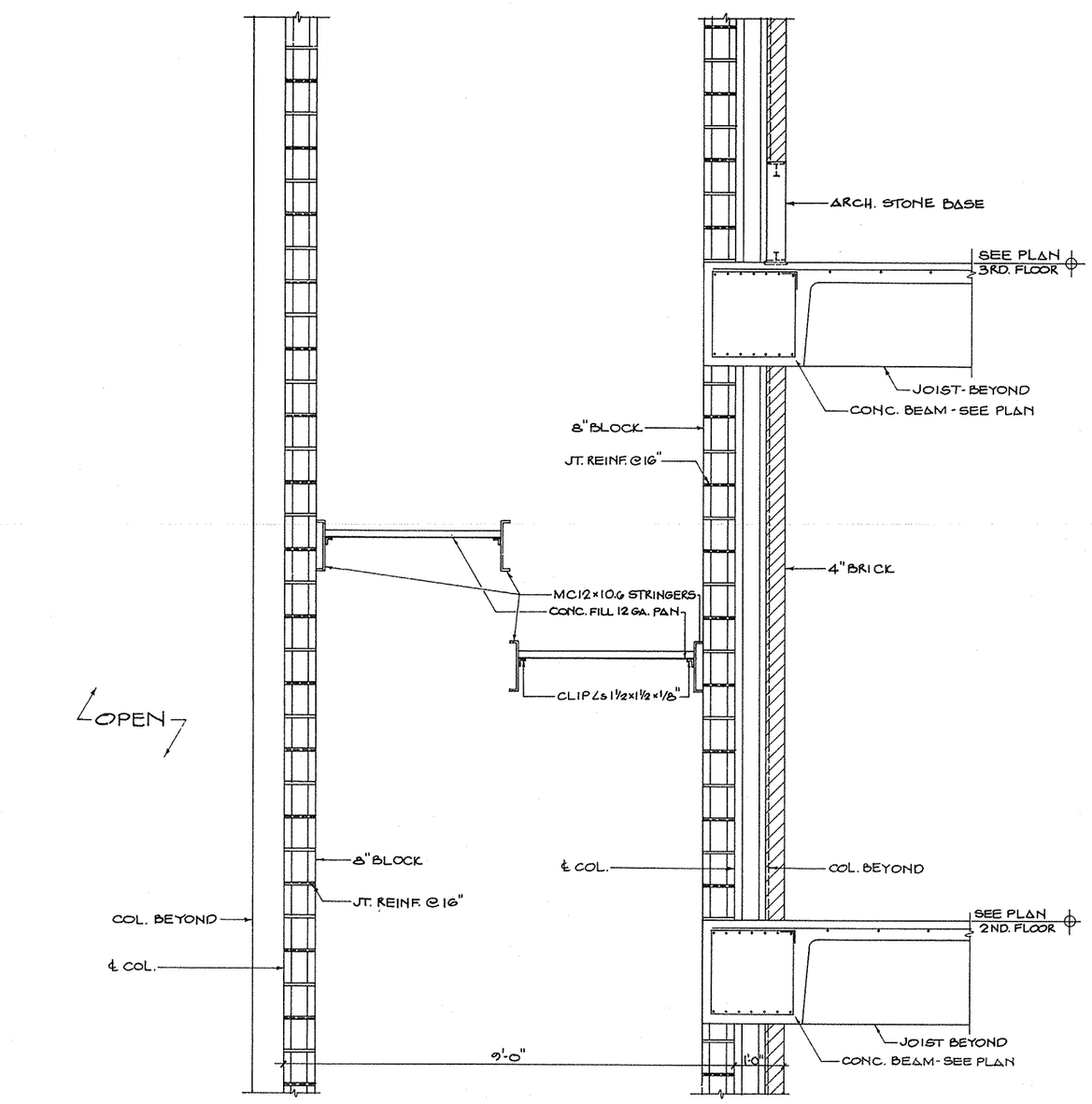

SECTION 1/S-13 3/4"=1'-0"

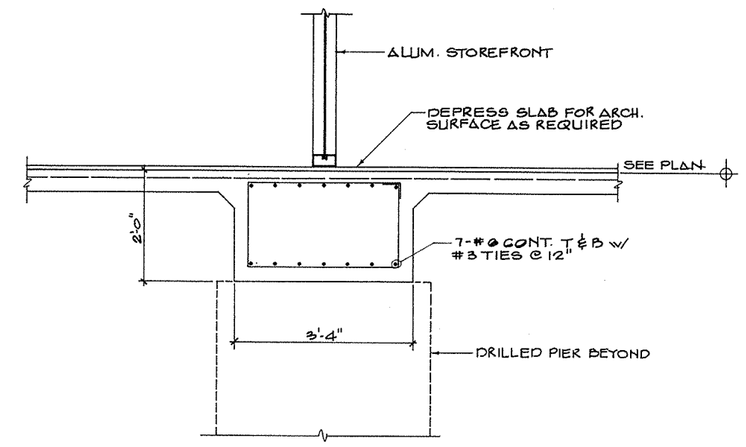

SECTION 2/S-13 3/4"=1'-0"

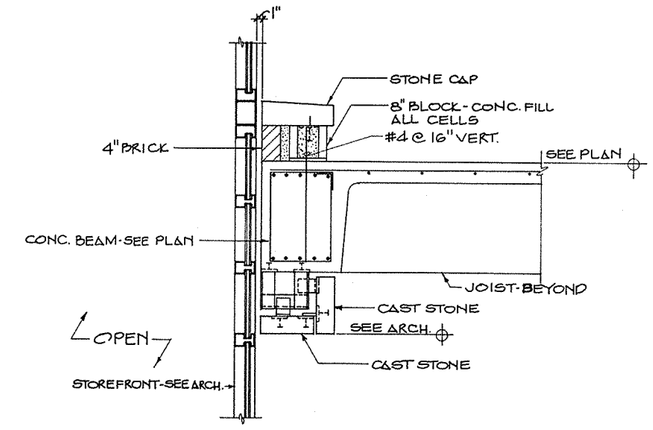

SECTION 3/S-13 3/4"=1'-0"

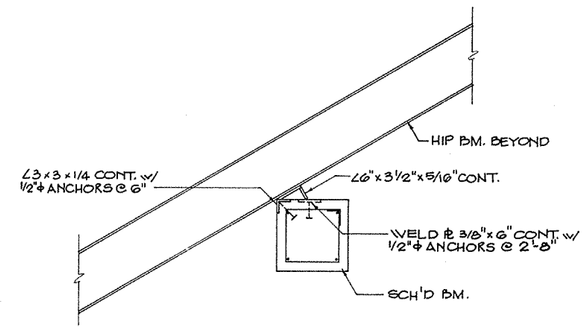

SECTION 4/S-13 3/4"=1'-0"

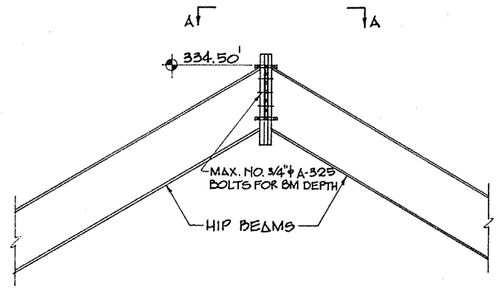

SECTION 5/S-13 3/4"=1'-0"

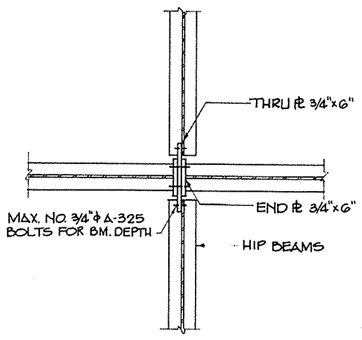

SECTION A-A

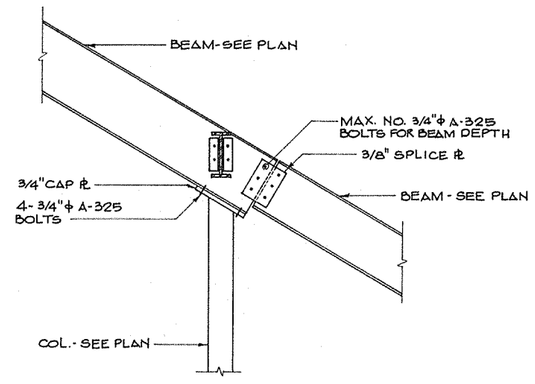

SECTION 8/S-13 3/4"=1'-0"

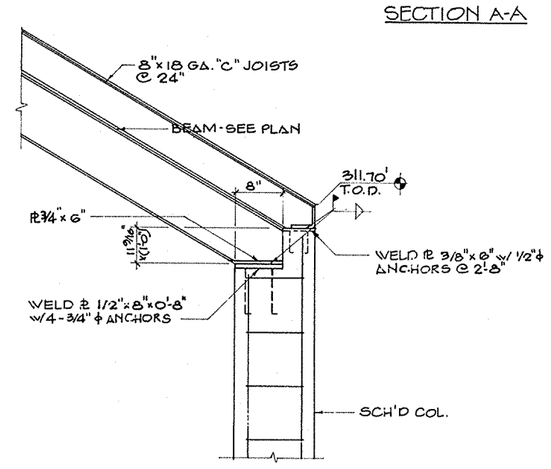

SECTION 9/S-13 3/4"=1'-0"

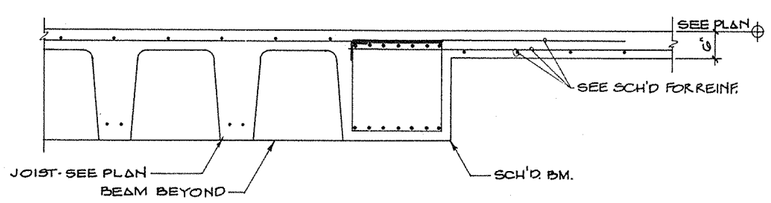

SECTION 6/S-13 3/4"=1'-0"

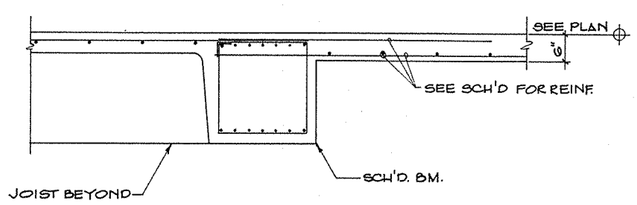

SECTION 7/S-13 3/4"=1'-0"

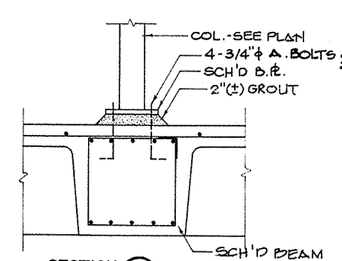

SECTION 10/S-13 3/4"=1'-0"

ALABAMA REGISTERED PROFESSIONAL ENGINEER GORDON L. DAVIS 9-18-91

DAVIS ENGINEERING, INC.
CONSULTING STRUCTURAL ENGINEERS
POST OFFICE BOX 4216
MONTGOMERY, ALABAMA 36103
(205) 265-3366

Fully Sprinklered

Revisions	Date

2WR
Watson Watson Rutland / Architects Inc.
166 Commerce Street
P.O. Box 4834
Montgomery, Alabama 36104
205)263-6401

STATE OF ALABAMA WATSON 503 WATSON 428 RUTLAND 2149 REGISTERED ARCHITECTS

Drawing Title: Framing Details

Approved: Area Project Manger

Project Title: Relocate Regional Office to Department Owned Grounds

Building Number: 42 | Checked: G.L.D. | Drawn: J.H.F.

Location: VMAC Montgomery, Al.

Date: 27 JANUARY 92

Project No. 322-002

DRAWING NO. S-13

Dwg 86 Of 134

Office of Facilities

Department of Veterans Affairs

VA FORM 08-6231A, JAN 1990

GPO U.S. GOVERNMENT PRINTING OFFICE: 1984-440-467