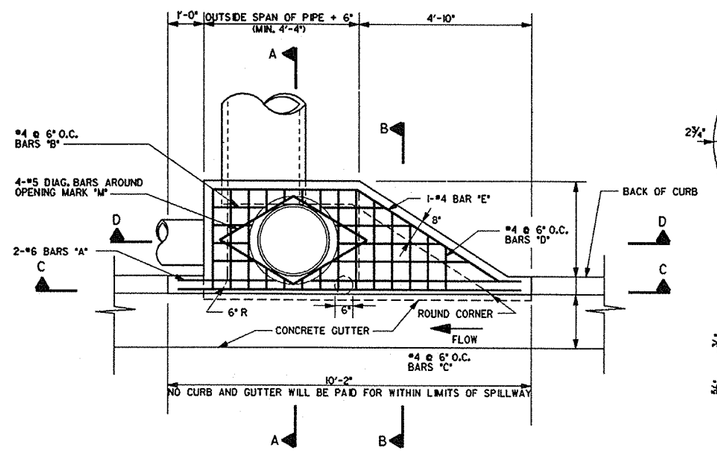

PLAN - TYPE "A"
SCALE: 1/2" = 1'-0"

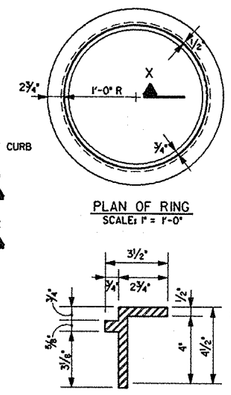

PLAN OF RING
SCALE: 1" = 1'-0"

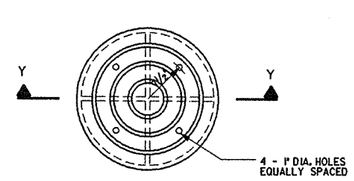

PLAN OF COVER
SCALE: 1" = 1'-0"

SECTION X-X
SCALE: 3" = 1'-0"

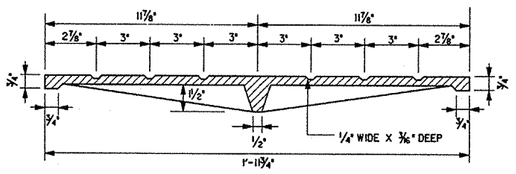

SECTION Y-Y
SCALE: 3" = 1'-0"

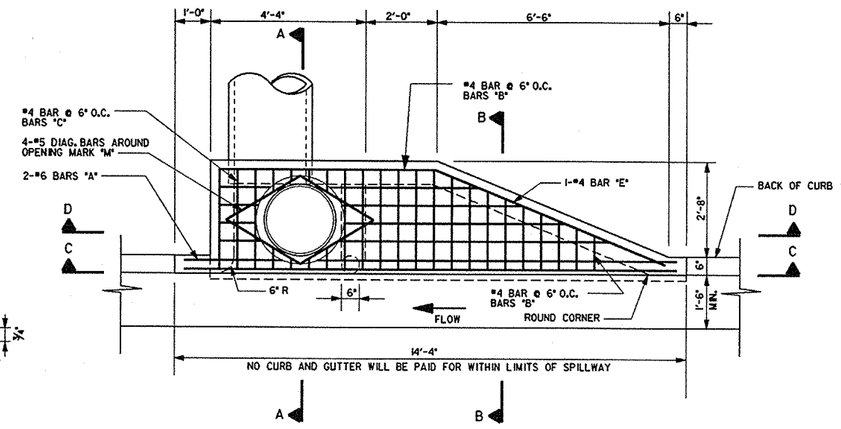

PLAN - TYPE "B"
SCALE: 1/2" = 1'-0"

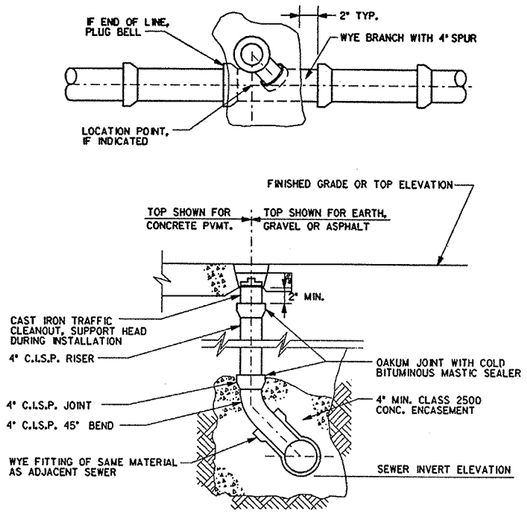

1 / 42-W3 SEWER CLEANOUT ASSEMBLY DETAIL
NOT TO SCALE

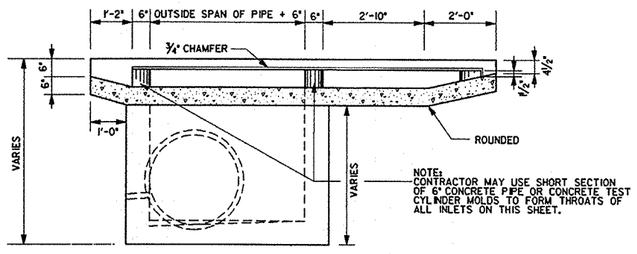

SECTION C-C TYPE "A"
SCALE: 1/2" = 1'-0"

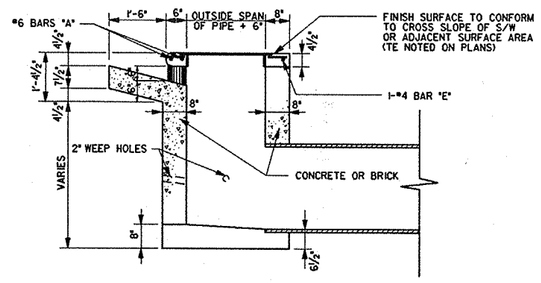

SECTION A-A TYPE "A" AND "E"
SCALE: 1/2" = 1'-0"

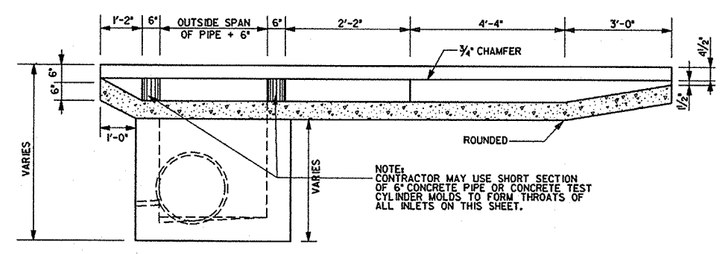

SECTION C-C TYPE "B"
SCALE: 1/2" = 1'-0"

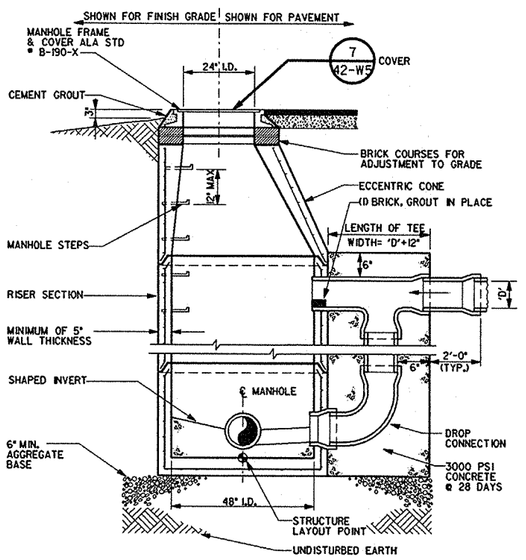

2 / 42-W3 TYPE "A" DROP MANHOLE DETAIL
NOT TO SCALE

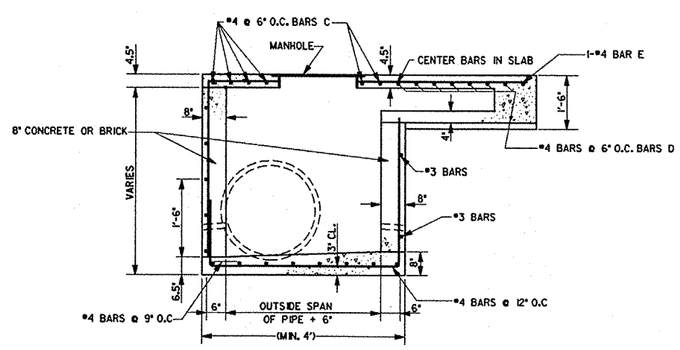

SECTION D-D TYPE "A"
SCALE: 1/2" = 1'-0"

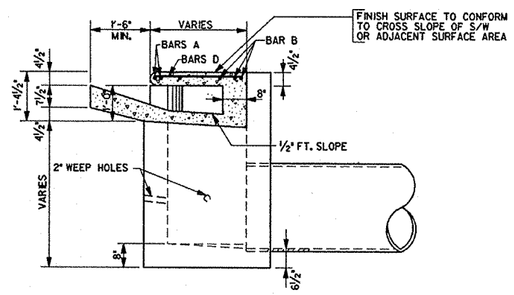

SECTION B-B TYPE "A" AND "B"
SCALE: 1/2" = 1'-0"

4 / 42-W3 TYPE "S" INLET DETAIL
AS NOTED

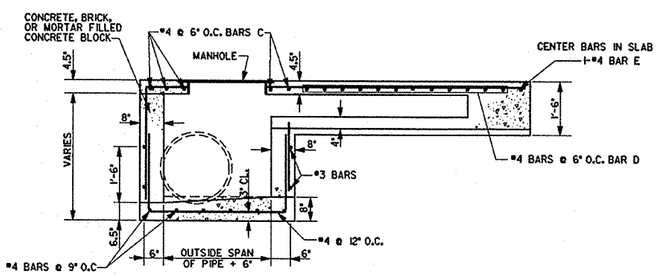

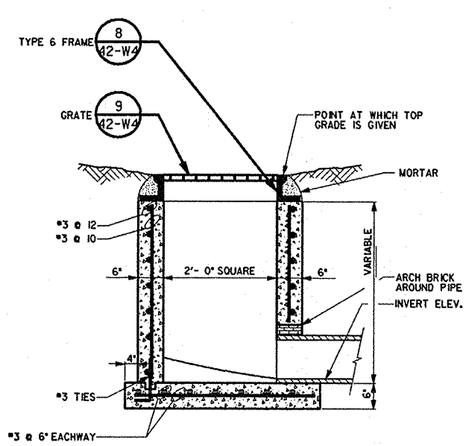

NOTE:
BOTTOM OF FOOTING TO BE A MINIMUM OF 1'- 0" BELOW FROST LINE.

10 / 42-W3 TYPE "D" YARD INLET
NOT TO SCALE

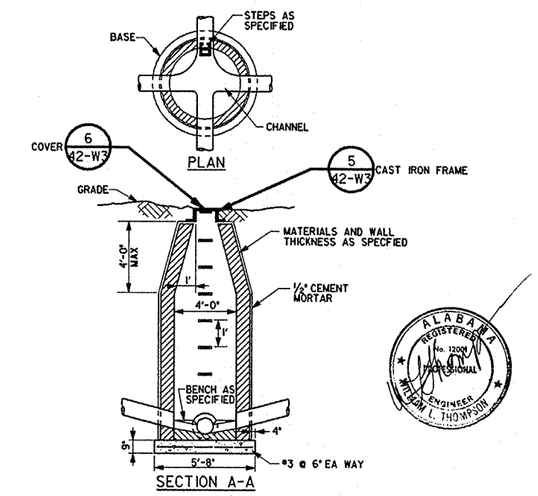

3 / 42-W3 VA SEWER MANHOLE AND TYPE "C" INLET
NOT TO SCALE

one inch = one foot | one-half inches = one foot | three inches = one foot

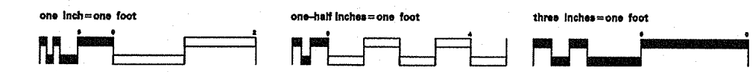

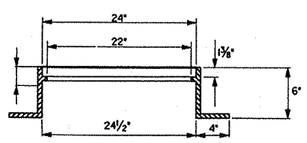

NOTE: TYPE I, STYLE A

5 / 42-W3 FRAME
NOT TO SCALE

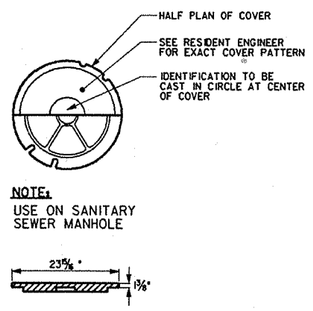

NOTE:
USE ON SANITARY SEWER MANHOLE

6 / 42-W3 COVER
NOT TO SCALE

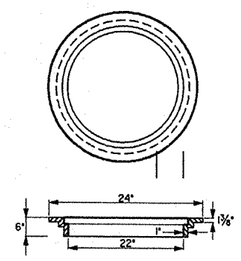

NOTE: TYPE 3

7 / 42-W3 FRAME
NOT TO SCALE

Fully Sprinklered

Revisions	Date

2WR
Watson Watson Rutland / Architects Inc.
166 Commerce Street
P.O. Box 4834
Montgomery, Alabama 36104
205)263-6401

STATE OF ALABAMA — WATSON SEA WATSON NEIL RUTLAND 2149 — REGISTERED ARCHITECTS

Drawing Title: Drainage and Sewer Details
Approved: Area Project Manger
Project Title: Relocate Regional Office to Department Owned Grounds
Building Number: 42
Checked
Drawn
Location: VMAC Montgomery,Al.
Date: 27 JANUARY 92
Project No. 322-002
DRAWING NO. 42-W3
Dwg. 17 Of 134

Office of Facilities
Department of Veterans Affairs

VA FORM 08-6231A, JAN 1990