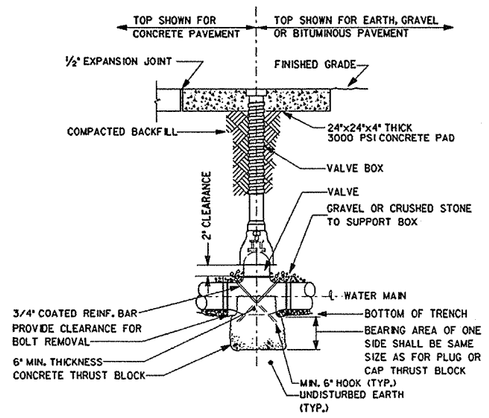

4 / 42-W6 GATE VALVE AND BOX DETAIL
NOT TO SCALE

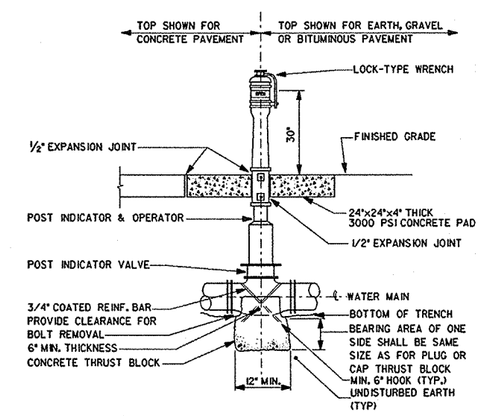

5 / 42-W6 POST INDICATOR AND VALVE DETAIL
NOT TO SCALE

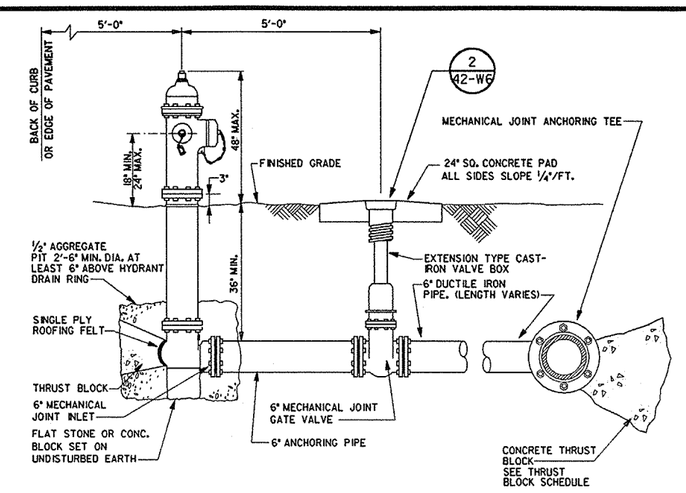

1 / 42-W6 FIRE HYDRANT LAYOUT DETAIL
NOT TO SCALE

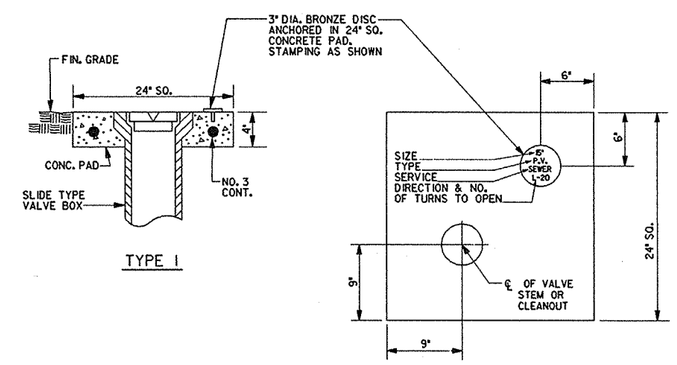

2 / 42-W6 VALVE BOX DETAIL
NOT TO SCALE

NOTE:
CONCRETE PAD SHOWN HERE IS TO BE USED ON ALL SERVICES: WATER, SEWER AND STORM CLEANOUTS, GAS, AND P.I.V.'S

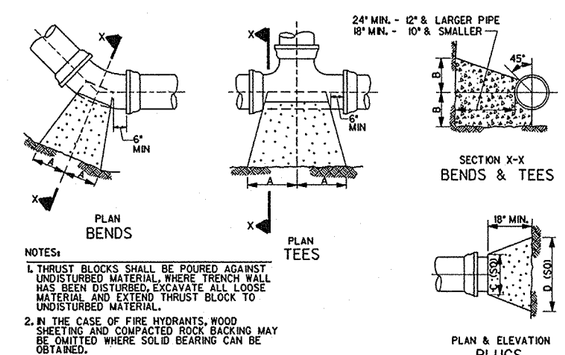

NOTES:

1. THRUST BLOCKS SHALL BE POURED AGAINST UNDISTURBED MATERIAL. WHERE TRENCH WALL HAS BEEN DISTURBED, EXCAVATE ALL LOOSE MATERIAL AND EXTEND THRUST BLOCK TO UNDISTURBED MATERIAL.
2. IN THE CASE OF FIRE HYDRANTS, WOOD SHEETING AND COMPACTED ROCK BACKING MAY BE OMITTED WHERE SOLID BEARING CAN BE OBTAINED.
3. ON TEES AND BENDS, EXTEND THRUST BLOCK FULL LENGTH. PUT WOOD BLOCKING IN FRONT OF PLUG BEFORE POURING CONCRETE THRUST BLOCK.
4. ALL WOOD BLOCKING SHALL BE CREOSOTED 12 LB. EMPTY CELL PER LATEST REVISION UNITED STATES FEDERAL SPEC. TTW-556.
5. BACKFILL SHALL CONSIST ENTIRELY OF CLEAN SAND AND ROCK FRAGMENTS. ANY MUCK ENCOUNTERED SHALL BE REPLACED WITH ACCEPTABLE BACKFILL.

TYPE	SIZE	1/4 BENDS		1/8 BENDS		1/16 BENDS		TEES		PLUGS	
		A	B	A	B	A	B	A	B	C	D
TYPE I SOIL	6"	8"	10"	6"	8"	3"	8"	8"	8"	10"	15"
	8"	12"	12"	8"	10"	5"	9"	9"	12"	12"	20"
	10"	15"	14"	10"	12"	6"	10"	11"	14"	14"	25"
	12"	19"	16"	12"	14"	8"	11"	14"	16"	16"	30"
	14"	23"	18"	14"	16"	10"	12"	16"	18"	18"	34"
	16"	26"	20"	16"	18"	11"	13"	18"	20"	20"	38"
TYPE II SOLID ROCK	6"	15"	10"	9"	10"	6"	8"	10"	12"	10"	21"
	8"	22"	13"	12"	13"	8"	10"	13"	16"	12"	29"
	10"	26"	17"	14"	17"	10"	13"	16"	20"	14"	36"
	12"	29"	21"	16"	21"	11"	16"	18"	24"	16"	41"
	14"	33"	24"	19"	24"	12"	20"	22"	27"	18"	48"
	16"	36"	27"	21"	27"	12"	24"	24"	30"	20"	54"

3 / 42-W6 THRUST BLOCK DETAILS
NOT TO SCALE

Fully Sprinklered

Revisions	Date

2WR
Watson Watson Rutland / Architects Inc.
166 Commerce Street
P.O. Box 4834
Montgomery, Alabama 36104
205)263-6401

STATE OF ALABAMA WATSON 503 WATSON 1928 RUTLAND 2149 REGISTERED ARCHITECTS

Drawing Title: Water Distribution Details	Project Title: Relocate Regional Office to Department Owned Grounds	Date: 27 JANUARY 92	
Approved: Area Project Manger	Building Number: 42	Checked	Drawn
	Location: VMAC Montgomery, Al.	Project No. 322-002	DRAWING NO. 42-W6 Dwg. 20 Of 134

Office of Facilities
Department of Veterans Affairs

VA FORM 08-6231A, JAN 1990

U.S. GOVERNMENT PRINTING OFFICE: 1984-440-487