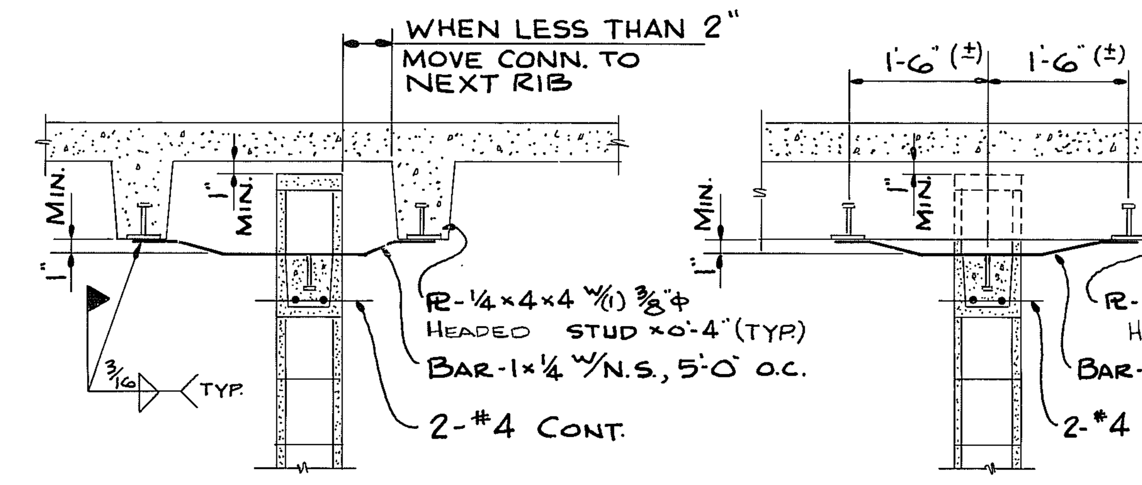

1/S8 TYPICAL WALL ANCHORAGE

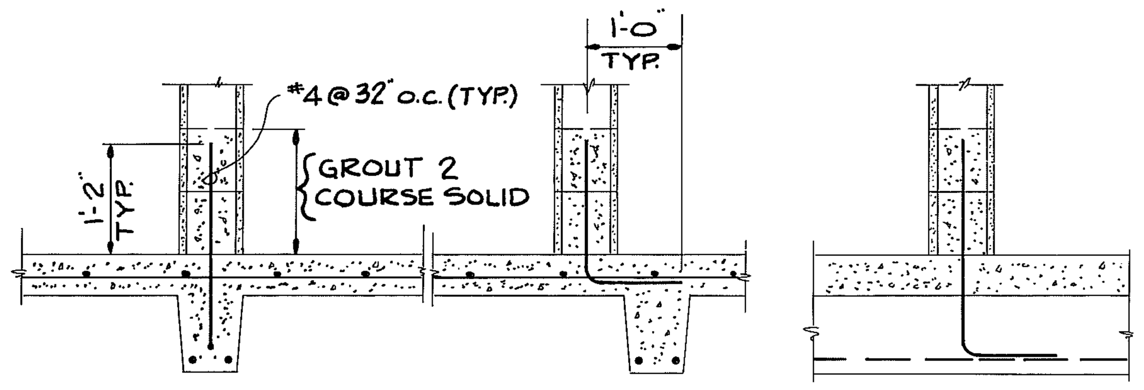

2/S8 TYPICAL WALL ANCHORAGE

JOIST SCHEDULE

JOIST MARK	JOIST SIZE W	JOIST SIZE D	REINFORCING STEEL BOT. BARS	REINFORCING STEEL TOP BARS	STIRRUPS #3s EE REM@12"	REMARKS
EJ1	22	15	4#5	4#8	12 @ 6" O.C.	
EJ2	22	14	4#5	4#5	----------	
EJ3	26	15	5#7	6#7	3 @ 6" O.C.	STIR. CONT. ℄ A2-℄ B
EJ4	26	15	4#5	6#7/5#7	3 @ 6" O.C.	COORD. T. BARS W/ADJ.
EJ5	26	15	4#5	5#7	3 @ 6" O.C.	
EJ6	26	15	4#6	5#7	4 @ 6" O.C.	
EJ7	26	15	6#7	6#7	4 @ 6" O.C.	
EJ8	26	15	5#6	4#7	6" O.C. CONT.	
EJ9	26	15	4#5	4#7	3 @ 6" O.C.	
EJ10	26	15	4#5	4#7/5#7	3 @ 6" O.C.	COORD. T. BARS W/ADJ.
EJ11	26	15	5#5	5#6	6" O.C. CONT.	
EJ12	26	15	4#5	5#6	3 @ 6" O.C.	25" WIDE ℄ 4a 2ND FLOOR
EJ13	26	15	4#5	4#5	----------	14" Deep @ Roof el 231.0'
EJ14	26	15	5#6	5#7	8 @ 6" O.C.	
EJ15	26	15	4#7	5#7	6" O.C. CONT.	
EJ16	26	15	5#5	6#6	6 @ 6" O.C.	
EJ17	26	15	4#5	6#6/5#6	3 @ 6" O.C.	COORD. T. BARS W/ADJ.
EJ18	26	15	4#5	5#6/5#7	3 @ 6" O.C.	COORD. T. BARS W/ADJ.
EJ19	26	15	5#5	5#7	12 @ 6" O.C.	
EJ20	22	15	4#5	6#6	12 @ 6" O.C.	
EJ21	26/22	15	5#5	5#7/6#7	11 @ 6" O.C.	COORD. T. BARS W/ADJ.
EJ22	22	15	4#5	6#7/4#5	----------	14" DEEP @ ROOF EL 237.0' COORD. T. BARS W/ADJ.
EJ23	22	15	4#6	5#7	11 @ 6" O.C.	
EJ24	19	15	5#6	5#7	15 @ 6" O.C.	
EJ25	26	15	6#7	5#6	11 @ 6" O.C.	STIR CONT. ℄ G - ℄ H

JOIST SCHEDULE

JOIST MARK	JOIST SIZE W	JOIST SIZE D	REINFORCING STEEL BOT. BARS	REINFORCING STEEL TOP BARS	REMARKS
J-1	6	5+10	2-#6	2-#7	Use 3 - #3 @ 12" stirrups ℄ E-F
J-2	6	5+10	2-#5	2-#7/2-#6	Coordinate top bars w/adj. span
J-3	6	5+10	#5, #6	2-#6/#6,#7	Coordinate top bars w/adj. span (3 - #3 @ 12" stirrups ℄ E-F)
J-4	6	5+10	2-#6	#6, #7	--
J-5	6	5+10	2-#5	#6, #7	--
J-6	6	5+10	2-#5	#6,#7/#5,#6	Coordinate top bars w/adj. span
J-7	6	5+10	2-#5	#5, #6	--
J-8	6	5+10	#6, #7	#7, #8	-- (4 - #3 @ 12" stirrups ℄ E-F)
J-9	6	5+10	2-#5	#7 #8/2-#5	Coordinate top bars w/adj. span (2 - #3 @ 12" stirrups ℄ E-F)
J-10	6	5+10	2-#5	2-#5/2-#8	Coordinate top bars w/adj. span (2 - #3 @ 12" stirrups ℄ E-F)
J-11	6	5+10	#7, #8	2-#8	-- (8 - #3 @ 12" stirrups ℄ E-F)
J-12	6	5+10	2-#5	2-#8/2-#6	Coordinate top bars w/adj. span (2 - #3 @ 12" stirrups ℄ E-F)
J-13	6	5+10	2-#5	2-#6/#6,#7	Coordinate top bars w/adj. span
J-14	6	3+10	2-#5	#6, #7	--
J-15	6	5+10	2-#5	#7,#8/2-#6	Coordinate top bars w/adj. span (2 - #3 @ 12" stirrups ℄ E-F)
J-16	6	5+10	2-#5	#7,#8/#5,#6	Coordinate top bars w/adj. span (2 - #3 @ 12" stirrups ℄ E-F)
J-17	16	5+10	3-#7	*	* Top steel - Use top steel from adj. joist
J-18	6	5+10	#5, #6	#6, #7/2-#7	Coordinate top bars w/adj. span
J-19	6	3+12	#5, #6	2-#7	4-#3 @ 12" stirrups ℄ E-F
J-20	6	3+12	#5, #6	2-#7/2-#8	Coordinate top bars w/adj. span (2 - #3 @ 12" stirrups ℄ E-F)
J-21	6	5+10	2-#5	#6,#7/2-#8	Coordinate top bars w/adj. span (2 - #3 @ 12" stirrups ℄ E-F)
J-22	6	5+10	2-#7	2-#8	-- (6 - #3 @ 12" stirrups ℄ E-F)
J-23	6	5+10	2-#5	2-#6	--
J-24	6	5+10	#5, #6	2-#6	--
J-25	6	5+10	2-#6	#6,#7/2-#7	Coordinate top bars w/adj. span
J-26	16	3+12	3-#7	2-#8,2-#7	
J-27	6	5+10	2-#6	2-#8	-- (4 - #3 @ 12" stirrups ℄ E-F)
J-28	6	3+12	2 - #5	#6, #7	
J-29	6	5+10	#5, #6	#6,#7/#7,#8	Coordinate top bars w/adj. span (2 - #3 @ 12" stirrups ℄ E-F)
J-30	6	3+10	2-#6	#6 #7	-- (3 - #3 @ 12" stirrups ℄ E-F)
J-31	6	3+10	2-#6	#7, #8	-- (6 - #3 @ 12" stirrups ℄ E-F)
J-32	6	5+10	#7, #8	2-#5	--
J-33	6	5+10	2-#4	2-#5	--
J-34	6	5+10	2-#5	2-#5	--
J-35	6	5+10	2-#5	2-#5/2-#6	Coordinate top bars w/adj. span
J-36	6	5+10	2-#6	2-#6	--
J-37	6	5+10	2-#5	2-#6/2-#7	Coordinate top bars w/adj. span
J-38	6	5+10	#6, #7	2-#7	-- (5 - #3 @ 12" stirrups ℄ E-F)
J-39	6	5+10	#5, #6	2-#7	-- (4 - #3 @ 12" stirrups ℄ E-F)
J-40	6	5+10	#5, #6	2-#7/2-#8	Coordinate top bars w/adj. span (2 - #3 @ 12" stirrups ℄ E-F)
J-41	26	5+10	4-#8	2-#7	#3 stirrups (1 @ 6", R @ 12")
J-42	10	3+10	2-#6	#7, #8	
J-43	6	5+10	#5, #6	#7,#8/2-#7	Coordinate top bars w/adj. span
J-44	6	5+10	#5, #6	#7, #8	--
J-45	6	4+10	2-#5	2-#5	--
J-46	6	4+10	2-#4	2-#5	
J-47	6	5+10	#7, #8	2-#8	#3 @ 12" stirrups continuous
J-48	26	5+10	2-#7	3-#8	#3 stirrups (1 @ 6", remaining @ 12")
J-49	10	5+10	2-#7	2-#8	Coordinate top bars w/adj. span (4 - #3 @ 12" stirrups ℄ E-F)
J-50	18/26	5+10	5-#8	5-#8	#3 stirrups - 6 @ 6", remaining @ 12"
J-51	26	5+10	3-#7	4-#8/3-#8	Coordinate top bars w/adj. span(1@6", R @ 12")
J-52	26	5+10	3-#7	3-#8/2-#8	Coordinate top bars w/adj. span(1@6", R @ 12")
J-53	10	5+10	2-#5	2-#5	
J-54	6	3+10	2-#8	2-#5	
J-55	10	5+10	2-#5	2-#6	
J-56	10	5+10	2-#5	2-#6/2-#8	Coordinate top bars w/adj. span
J-57	10	5+10	2-#7	2-#8	-- (4 - #3 @ 12" stirrups ℄ E-F)
J-58	10	5+10	2-#5	2-#8/#7, #8	Coordinate top bars w/adj. span
J-59	10	3+10	2-#6	#7, #8	
J-60	26	5+10	4-#8	2-#7	#3 stirrups (1 @ 6", R @ 12")

BEAM SCHEDULE

BEAM MARK	BEAM SIZE W	BEAM SIZE D	REINFORCING STEEL BOT. BARS	REINFORCING STEEL TOP BARS	REINFORCING STEEL TOP CONT.	STIRRUPS TYPE	STIRRUPS SIZE	STIRRUPS SPACING	REMARKS
B1	48	21	8 #9	8 #9		A	5	7 @ 9" REM @ 18"	
B2	48	21	9 #9	8#9/10#10		A	5	7 @ 9" REM @ 18"	COORD. TOP BARS W/ADJ. SPAN
B3	48	15	8 #7	10#10/11#9		B/A	4	3B + 8A @ 6 REM @ 12"	COORD. TOP BARS W/ADJ. SPAN
B4	48	15	8 #8	11 #9		B/A	4	3B @ 6 + 8A @ 6 REM A @ 12"	
B5	48	15	9 #7	11 #9		B/A	4	3B @ 6 + 8A @ 6 REM A @ 12"	
B6	48	15	8 #9	11 #9		A	4	3 @ 6" REM @ 12"	
B7	48	21	8 #7	8 #8		A	4	12" O.C.	
B8	48	21	8 #7	8#8/11#9		A	4	12" O.C.	COORD. TOP BARS W/ADJ. SPAN
B9	48	21	8 #7	11#9/11#10		A	5	5 @ 9 REM @ 18"	COORD. TOP BARS W/ADJ. SPAN
B10	48	21	8 #7	11 #10		A	5	5 @ 9 REM @ 18"	
B11	48	21	8 #9	11 #9		A	5	8 @ 9 REM @ 18"	
B12	36	14	6 #7	7#9/6#10		A	3	10 @ 5 REM @ 12"	COORD. TOP BARS W/ADJ. SPAN
B13	36	14	7 #6	7 #9		A	3	8 @ 5 REM @ 12"	
B14	36	21	6 #6	7 #9		A	4	4 @ 9 REM @ 18"	
B15	48	21	9 #8	10 #10		B	4	7 @ 9 REM @ 18"	
B16	48	15	7 #7	10 #10		B	4	10 @ 6 REM @ 12"	
B17	48	21	8 #7	8#8/10#8		A	4	18" O.C.	COORD. TOP BARS W/ADJ SPAN
B18	48	15	10 #9	10#8/10#10	℄ 4a-5	B/A	4	6B + 8A @ 6" REM @ 12"	COORD. TOP BARS W/ADJ SPAN
B19	48	36	20 #10	See Detail		A	5	16" O.C.	SEE DETAIL 19/S9
B20	48	32	14 #9	See Detail		A	5	9 @ 14 REM @ 24"	SEE DETAIL 19/S9
B21	36	30	8 #9	See Detail		A	4	8 @ 12 REM @ 14"	
B22	36	14	8 #4	6 #10	℄4a - 5	A	3	7 @ 5 REM @ 12"	
B23	48	15	8 #7	9 #9		A	4	7 @ 6 REM @ 12"	
B24	48	15	7 #6	9#9/9#8		A	4	3 @ 6 REM @ 12"	COORD. TOP BARS W/ADJ SPAN
B25	48	15	6 #7	9 #8		A	4	3 @ 6 REM @ 12"	
B26	48	15	9 #7	10#10/10#9		A	4	8 @ 6 REM @ 12"	COORD. TOP BARS W/ADJ SPAN
B27	48	15	7 #8	10 #9		A	4	9 @ 6 REM @ 12"	
B28	48	15	6 #7	10#9/9 #8		A	4	3 @ 6 REM @ 12"	
B29	48	21	7 #6	10 #9		A	4	18" O.C.	
B30	48	15	10 #8	10 #10		A/B	4	4B + 6A @ 6" REM @ 12"	
B31	48	21	8 #9	11#9/10#10		A	4	8 @ 9 REM @ 18" O.C.	COORD. TOP BARS W/ADJ SPAN
B32	18	24	4 #9	6 #10	ALL	A	3	11" O.C.	SEE SECTION 2/S6 1ST FLOO
B33	48	15	7 #7	6#10/11#9		A	4	8 @ 6" O.C. REM @ 12"	COORD. TOP BARS W/ADJ SPAN
B34	33	15	7 #8	5 #10		A	4	11 @ 6 REM @ 12"	
B35	33/48	21	5 #8	6 #10		A	5	9" O.C.	
B36	18	24	3 #6	4 #7	ALL	A	3	7 @ 11" O.C. REM @ 12"	
B37	33	14	5 #5	4#7/7#9		A	4	12" O.C.	COORD. TOP BARS W/ADJ SPAN
B38	33/32	14/15	7 #7	7 #9	℄ 9 - ℄ 10	A	3	10 @ 5" O.C. REM @ 12"	
B39	33	21	6 #6	7 #9		A	5	10 @ 9" O.C. REM @ 18"	
B40	33	15	5 #8	6 #9		A	4	7 @ 6" O.C. REM @ 18"	
B41	33	15	5 #8	6#10/5#9		A	4	6 @ 6 REM @ 12" O.C.	COORD. TOP BARS W/ADJ SPAN
B42	33	21	5 #8	5 #9		A	5	11 @ 9 REM @ 12"	
B43	33	14	6 #6	6 #6		A	4	3 @ 5 REM @ 10" O.C.	
B44	33	14	6 #6	7 #7		A	4	12" O.C.	
B45	32	14/15	6 #6	5 #6		A	4	12" O.C.	
B46	8	24	2 #10	2 #10	ALL	A	3	11" O.C.	
B47	8	24	2 #5	2 #5	ALL	A	3	11" O.C.	
B48	26	24	8 #7	6 #7	℄D - ℄E	A	4	14 @ 10" O.C.	
B49	22	24	5 #7	6 #7	℄D - ℄E	A	4	10" O.C.	
B50	18	14/15	5 #9	4 #4	ALL	A	4	18" O.C.	
B51	30/42	14	6 #8	2 #4		A	4	12" O.C.	
B52	26	14	6 #8	4 #5		A	4	12" O.C.	
B53	12	14/15	2 #5	2 #4		A	3	18" O.C.	
B54	24	14/15	5 #5	3 #5	ALL	A	4	18" O.C.	
B55	15	15	3 #7	2 #7	ALL	A	4	10 @ 6" O.C. REM @ 12" O.C.	
B56	16	34	3 #7	3 #7	ALL	A	3	16" O.C.	SEE DETAIL 10/S9
B57	24	15	5 #6	3 #5	ALL	A	4	5 @ 6" O.C. REM @ 18 O.C.	
B58	42/48	15	9 #8	*	SPLICE @ ℄	A	4	5 @ 6" O.C. REM @ 18 O.C.	* TOP STEEL USE TOP STEE FROM ADJACENT SPAN
B59	46 ½	15	9 #8	7 #9	ALL	A	4	10 @ 6" O.C. REM @ 12" O.C.	
B60	33/16	15	3 #8	2 #7	ALL	A	3	10 @ 6" O.C. REM @ 12" O.C.	
B61	15	15	3 #5	3 #5		A	3	18" O.C.	
B62	18 ½	15	5 #8	4 #5	ALL	A	4	6" O.C.	

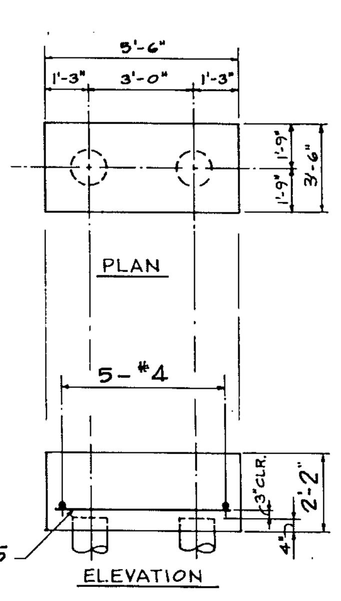

PILE CAP DETAIL

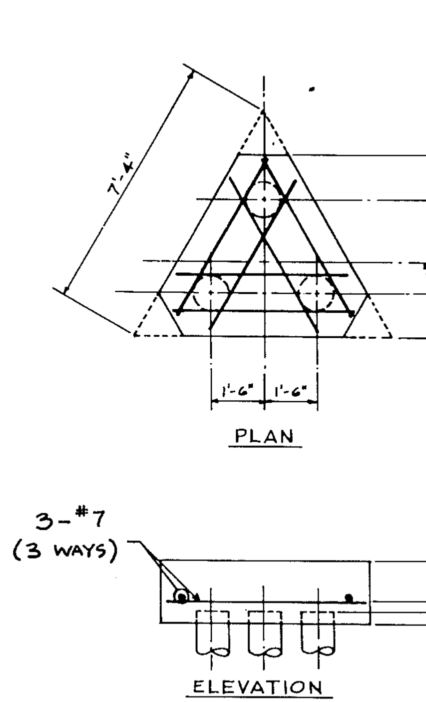

PILE CAP DETAIL

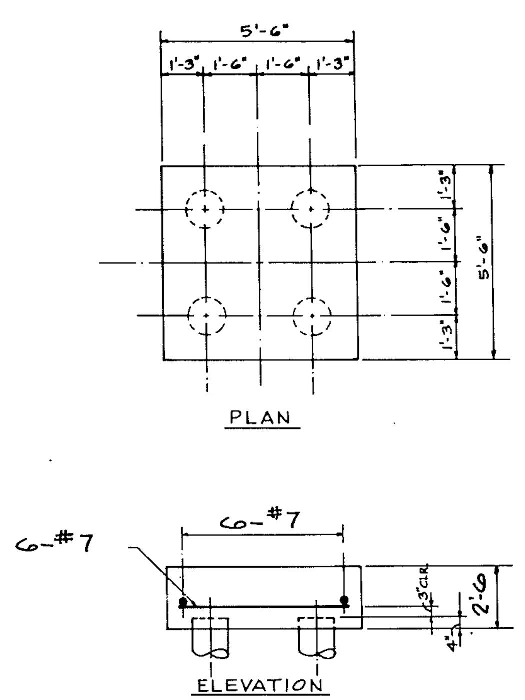

PILE CAP DETAIL

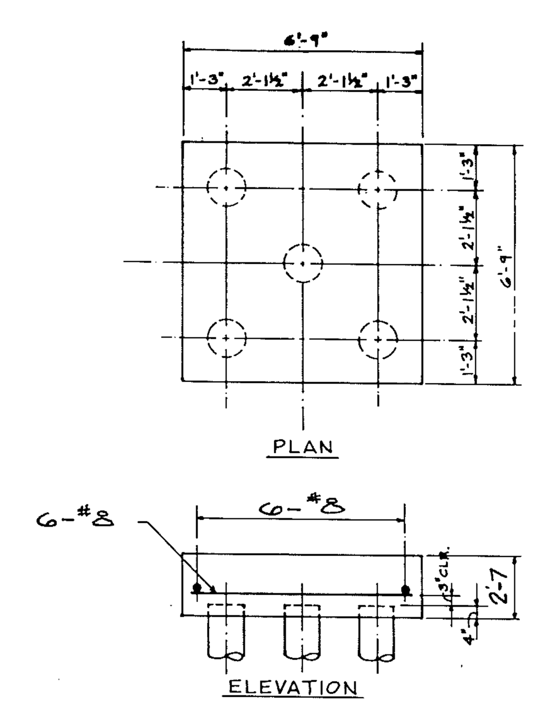

PILE CAP DETAIL

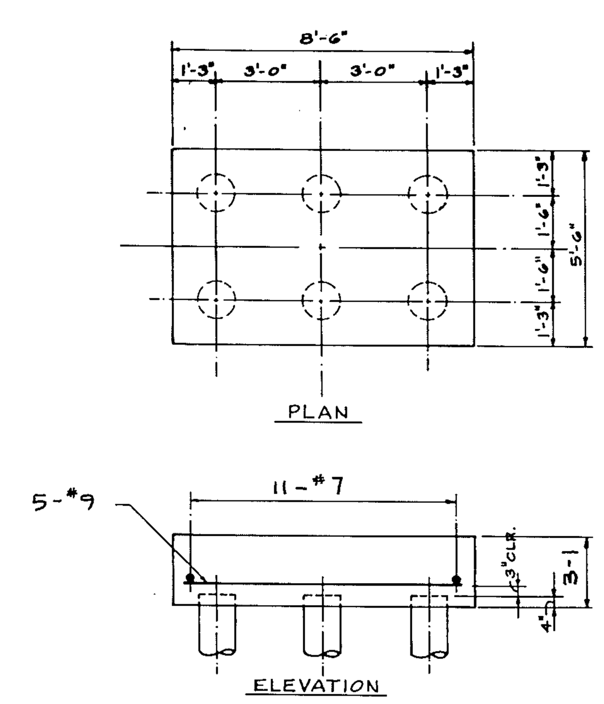

PILE CAP DETAIL

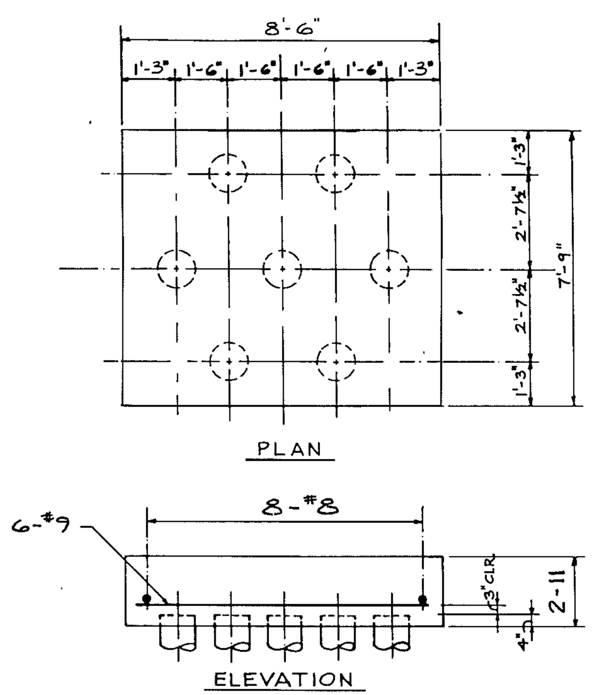

PILE CAP DETAIL

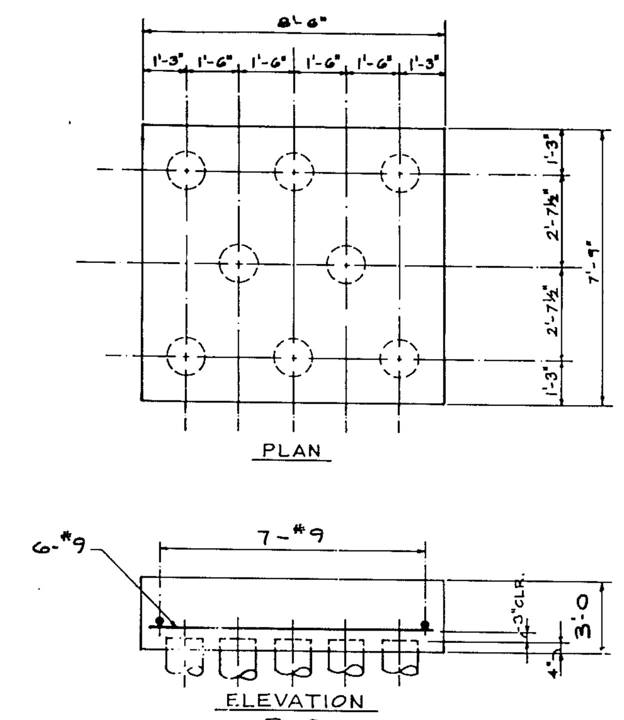

PILE CAP DETAIL

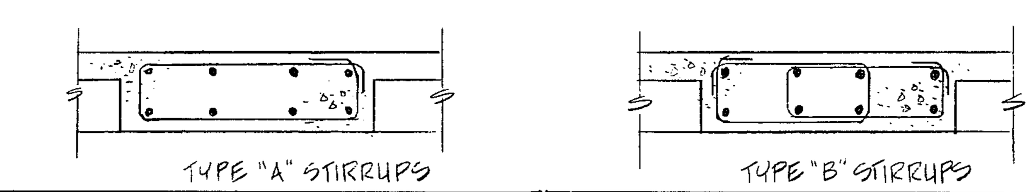

7-2-1-2472

AS BUILT JUN 1 1988

Revisions | Date

ODELL Associates Inc. (SEAL 1970, Charlotte, N.C.) — North Carolina Registered Engineer Seal 4640, Donald D. Haigh, 1-13-85

Planning Architecture Engineering
ODELL
Odell Associates Inc.
222 South Church Street
Charlotte, NC 28202

Drawing Title: SCHEDULES & PILE CAPS	Project Title: CLINICAL ADDITION	Date: MAR. 29, 1985	Veterans Administration
Approved: Division Chief	Drawn	Building Number: 1	Project No. 565-027
Approved: Service Director	Checked	Location: V.A.M.C. FAYETTEVILLE, N.C.	DRAWING No. 1-S8 Dwg. Of

VA FORM 08-6231, OCT 1978

Proj. # 1920