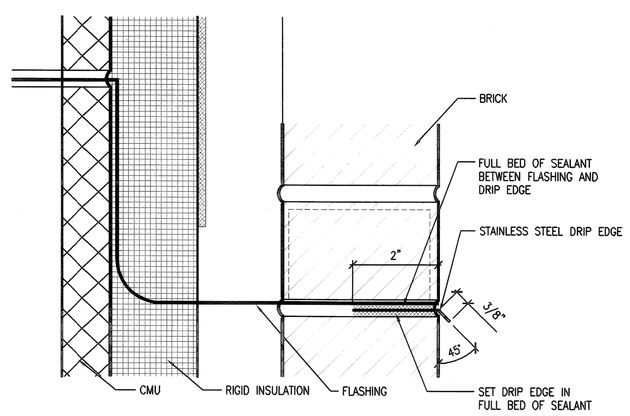

D1 THRU WALL FLASHING DRIP EDGE DETAIL

SCALE: NOT TO SCALE

NOTES:

1. THOROUGHLY CLEAN ALL JOINTS, REMOVING ALL FORIEGN MATTER INCLUDING DUST, PAINT, OIL, WATERPROOFING OR REPELLENT, WATER, SURFACE DIRT, AND FROST.
2. PROVIDE MASKING TAPE WHERE REQUIRED ON VISIBLE SURFACES TO PROVIDE A CLEAN SMOOTH JOINT WITHOUT SMEARS.
3. DO NOT TWIST OR BRAID BACKER ROD.
4. INSTALL SEALANT SO AS TO ELIMINATE AIR POCKETS.

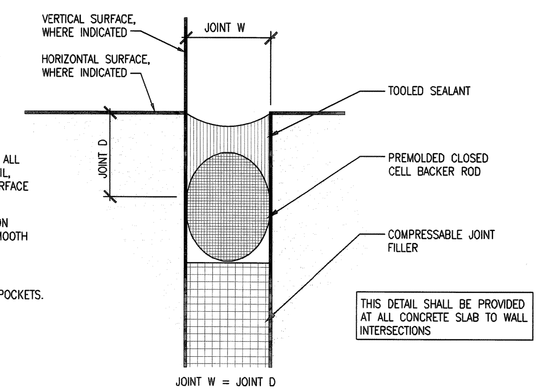

D4 TYPICAL CONTROL JOINT DETAIL

SCALE: NOT TO SCALE

NOTE:
MEMBRANE FLASHING OVER THRU-WALL FLASHING NOT SHOWN FOR CLARITY

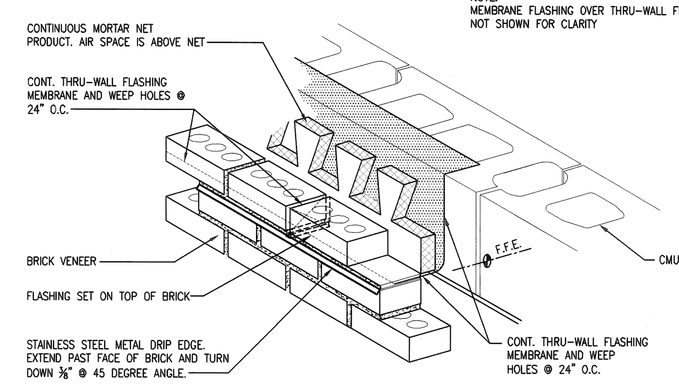

D7 TYPICAL BRICK VENEER BASE OF WALL FLASHING DETAIL

SCALE: NOT TO SCALE

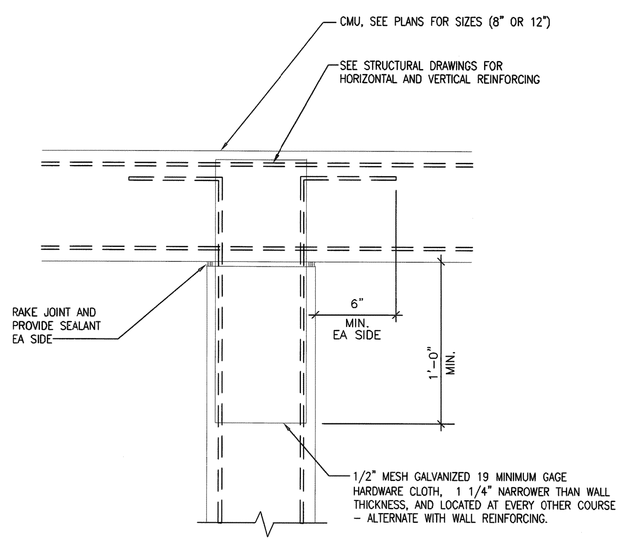

F1 TYPICAL CMU INTERSECTION DETAIL

SCALE: NOT TO SCALE

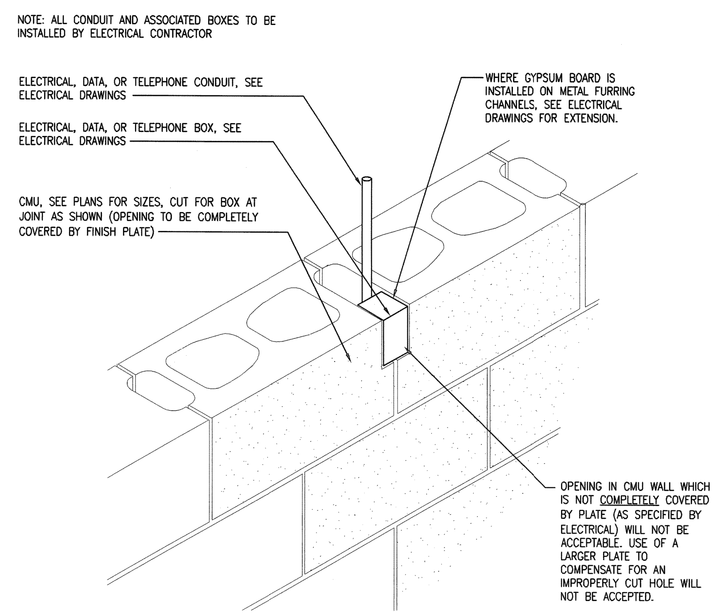

F4 TYPICAL CMU ELECT. BOX CUT OUT DETAIL

SCALE: NOT TO SCALE

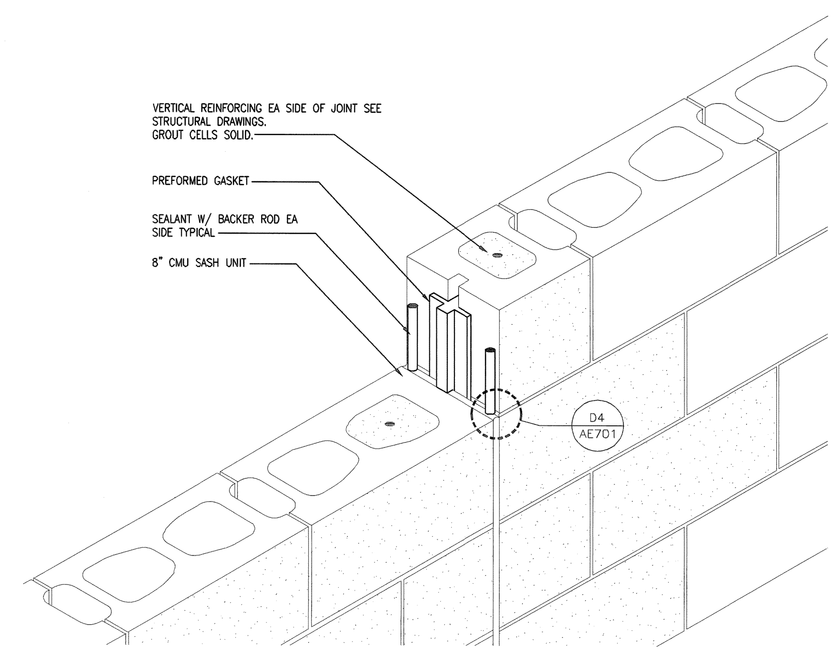

F7 TYPICAL CMU CONTROL JOINT DETAIL

SCALE: NOT TO SCALE

100% CONSTRUCTION DOCUMENTS

REVISION NO.	REVISION DESCRIPTION	By	Date

Revisions

Department of Veterans Affairs
William Jennings Bryan Dorn
VA Medical Center
6439 Garners Ferry Road
Columbia, SC 29209

SEAL

Architect/Engineer Address
Harrell, Saltrick & Hopper
Design & Management Solutions for the Built Environment
8016 TOWER POINT DRIVE
CHARLOTTE, NC 28227
P 704.814.1320
F 704.321.0833
WWW.HSHPC.COM
COPYRIGHT © 2011 HARRELL SALTRICK & HOPPER, PC
HSH PROJECT # 11015

Recommended Approvals:	
1. MEDICAL DIRECTOR	6. OPERATIONS SERVICE LINE MANAGER
2. ASSOCIATE DIRECTOR	7. INFECTION CONTROL MANAGER
3. CHIEF OF STAFF	8. SAFETY MANAGER
4. ASSOC. DIRECTOR	9. GENERAL ENGINEER
5. SERVICE LINE MGRS.	10. COTR

Drawing Title: MISCELLANEOUS DETAILS

Project Title: REPLACE BOILER PLANT/ COGEN/CHP

Date: APRIL 30, 2012

Project Number: 544-11-101

★BUILDING IS FULLY SPRINKLERED★

Drawn: RLS, MJF

Building Number: 21

AutoCAD File Name

Checked

Reviewed

Const. Contract No.

DRAWING No. AE701

Veterans Affairs