TYPICAL DETAILS

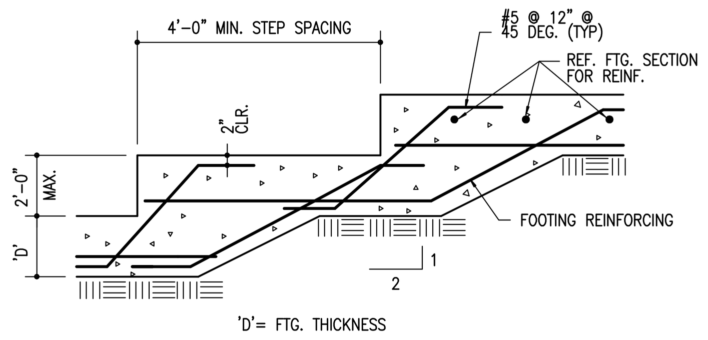

B1 TYP. STEPPED FOOTING
SCALE: NONE

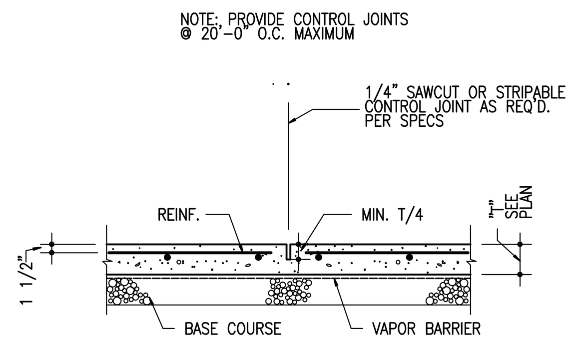

B4 TYP. CONTROL JOINT
SCALE: NONE
@ SLAB ON GRADE

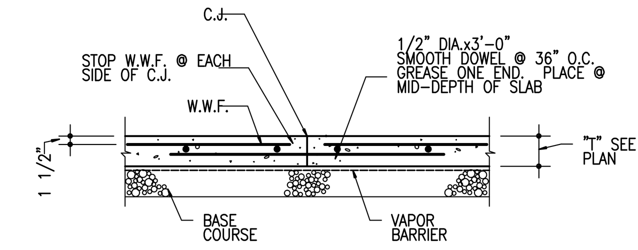

B5 TYP. CONSTRUCTION JOINT
SCALE: NONE
@ SLAB ON GRADE

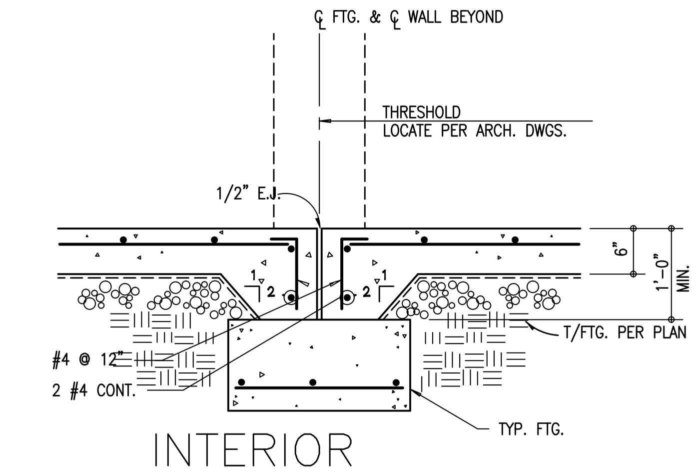

B8 INTERIOR THRESHOLD DETAIL
SCALE: NONE
@ CONTINUOUS FOOTING U.O.N. ON PLAN

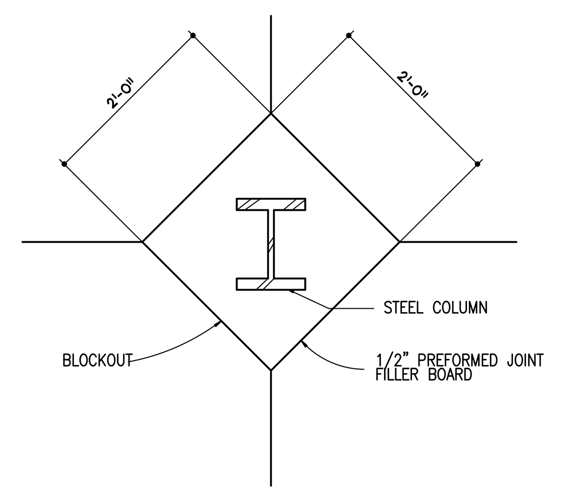

C1 TYP. ISOLATION JOINT
SCALE: NONE
@ COLUMN

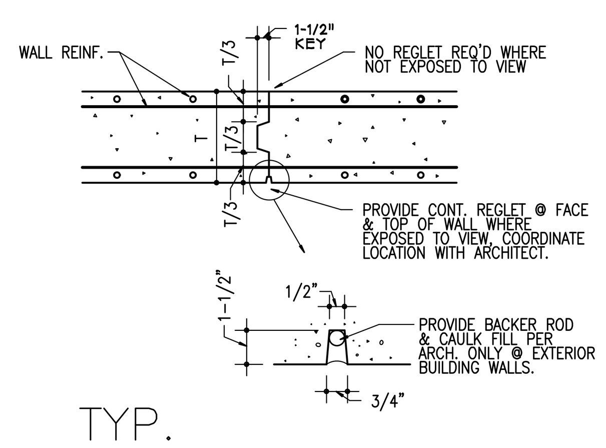

C2 TYP. CONSTRUCTION JOINT
SCALE: NONE
@ CONCRETE WALLS

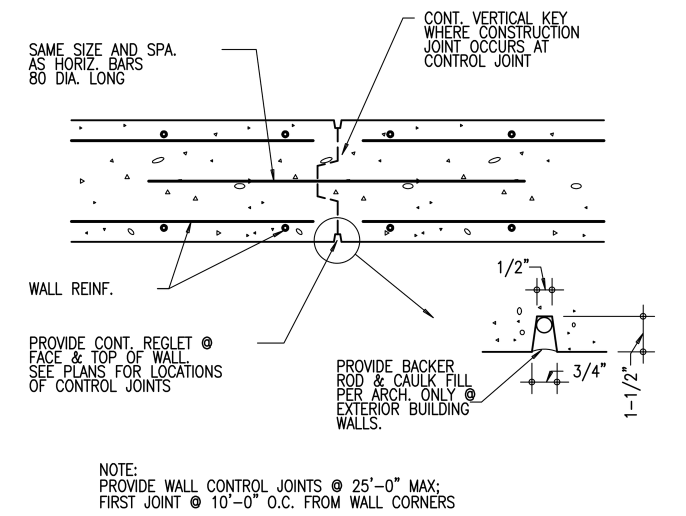

C4 TYP. WALL CONTROL JT.
SCALE: NONE
AT CONCRETE WALLS EXPOSED TO VIEW

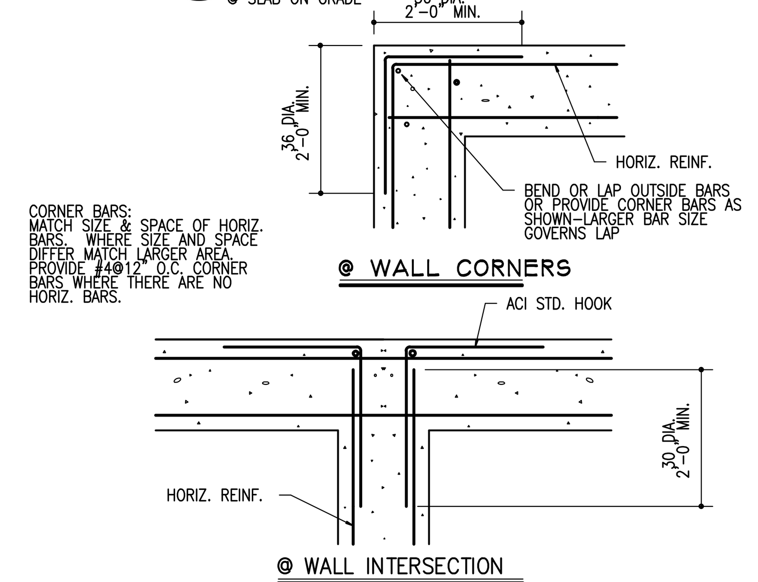

C5 TYP. CORNERS REINFORCING
SCALE: NONE
@ CONCRETE WALLS

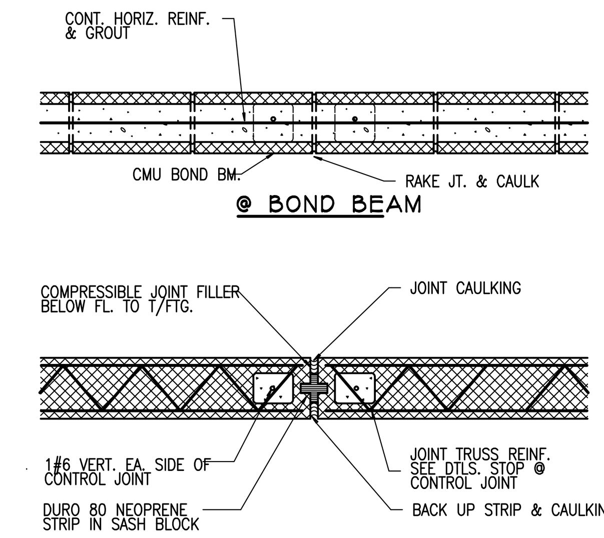

C7 TYP. CONTROL JOINT
SCALE: NONE
@ CMU WALLS
REF. ARCH. DWGS. FOR JOINT LOCATIONS

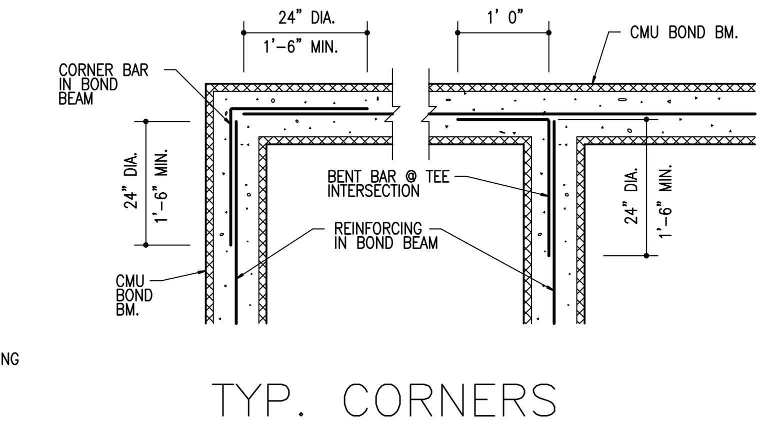

C8 TYP. CORNERS REINFORCING
SCALE: NONE
@ MASONRY BOND BEAMS

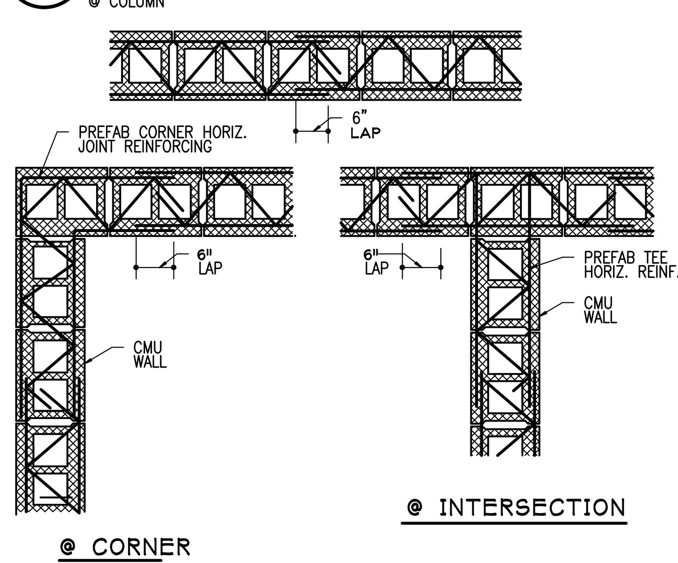

D1 TYP. LAP SPLICE
SCALE: NONE
@ JOINT REINFORCEMENT

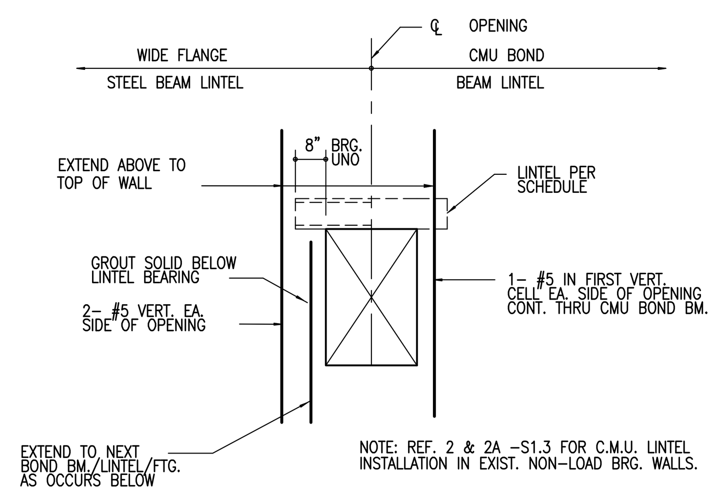

D2 TYP. REINFORCING AT MASONRY WALL OPENING
SCALE: NONE

CMU MASONRY LINTEL SCHEDULE

CLEAR OPENING	DEPTH	REINFORCING 6" CMU	8" CMU	12" CMU	MIN. BRG.
0'-8" TO 3'-4"	8"	1-#4	1-#4	2-#5	8"
3'-4" TO 4'-8"	8"	1-#4	1-#4	2-#5	8"
4'-8" TO 6'-0"	8"	1-#4	1-#5	2-#5	8"
6'-0" TO 8'-0"	16"	1-#4	2-#5	2-#5	8"
8'-0" TO 10'-0"	16"	1-#4	2-#5	2-#5	12"

TYPICAL DETAILS

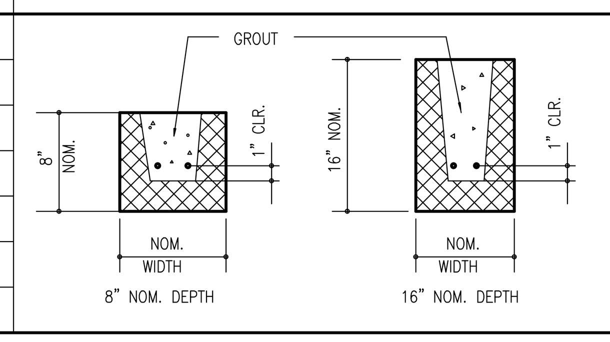

NOTES:

1. EXTEND REINFORCING TO END OF BEARING AT EACH SIDE OF OPENING.
2. FILL WITH GROUT ALL CORES UNDER BEARING FROM BOTTOM OF LINTEL TO 48" MINIMUM BELOW LINTEL.
3. LINTELS OVER 12'-0" CLEAR SPAN OR SUPPORTING FLOOR OR ROOF REQUIRE SPECIAL DESIGN.
4. THIS SCHEDULE IS FOR LIGHTWEIGHT BLOCK ONLY (95PCF MAX.)

STEEL LINTEL SCHEDULE

CLEAR OPENING	ONE ANGLE FOR EA. 4" WYTHE FOR 4",8",& 12" WALLS	6" WALL	10" WALL	MIN. BRG.
0'-8" TO 3'-4"	L 3 1/2"x 3 1/2"x 1/4"	WT5x6	2-L'S 4x4x1/4	4"
3'-4" TO 5'-4"	L 4"x 3 1/2" x 1/4" LLV	WT5x6	2-L'S 4x4x5/16	6"
5'-4" TO 7'-4"	L 5"x 3 1/2" x 5/16" LLV	WT7x11	2-L'S 6x4x1/4	8"
7'-4" TO 10'-0"	L 6" x 3 1/2"x 5/16" LLV	WT7x13	2-L'S 6x4x5/16	8"

TYPICAL DETAILS

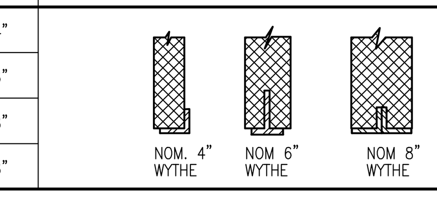

NOTES:

1. WHERE LINTELS BEAR ON HOLLOW MASONRY UNITS FILL ALL CORES UNDER BEARING WITH GROUT FROM BOTTOM OF LINTEL TO 16" MINIMUM BELOW LINTEL.
2. THESE LINTELS ARE NOT DESIGNED FOR MASONRY WALLS THAT CARRY FLOOR LOAD.

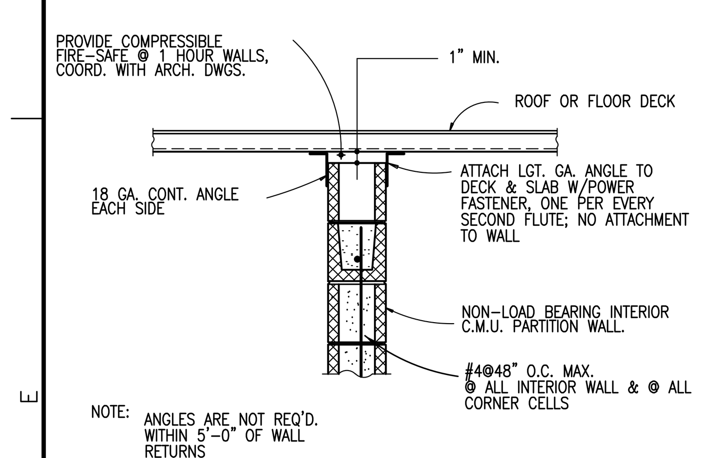

E1 TYPICAL INT. SECTION
SCALE: NONE
TOP SUPPORT FOR NON-LOAD BEARING INTERIOR C.M.U. PARTITION WALLS.

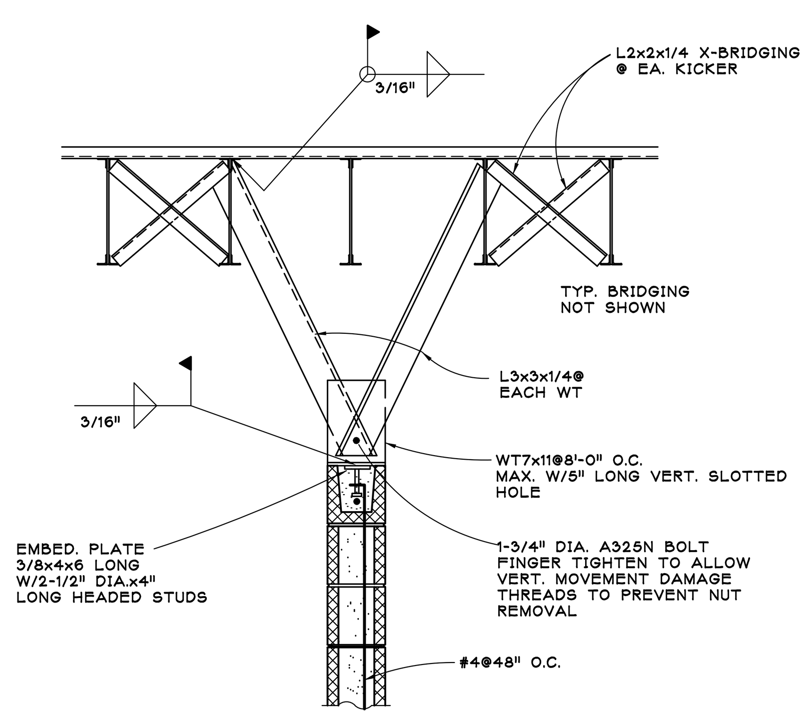

F2 TYP INT. SECTION
SCALE: NONE

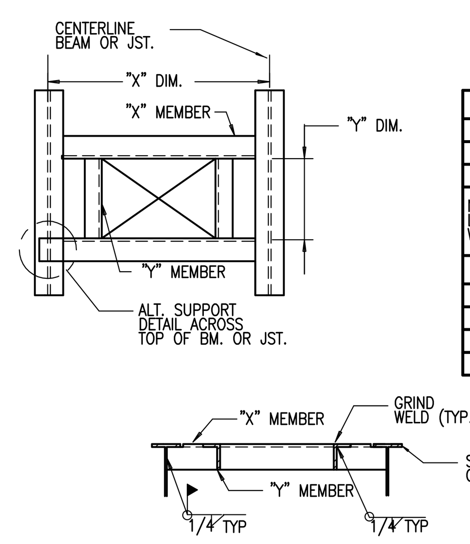

MAX. "X" DIM.	"X" MEMBER (LLV)
4'-0"	L3x3x1/4
5'-0"	L4x3x5/16
6'-6"	L5x3x5/16

NOTE: "X" MEMBER SHALL NOT BE OF LESSER SIZE THAN "Y" MEMBER TO WHICH IT CONNECTS.

MAX. "Y" DIM.	"Y" MEMBER (LLV)
1'-6"	L2 1/2x2 1/2x1/4
4'-0"	L3x3x1/4
7'-0"	L4x3x1/4
9'-0"	L6x4x3/8

E4 ROOF SUPPORT @ OPENING
SCALE: NONE

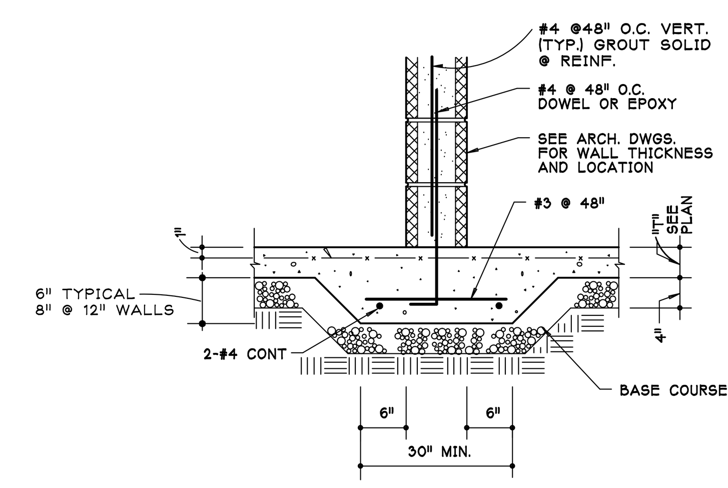

E6 TYP. INTERIOR CMU WALL
SCALE: NONE
NON-LOAD BEARING MASONRY WALL PARTITIONS

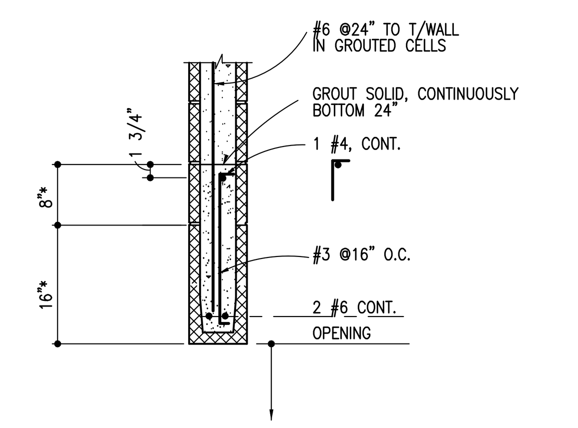

E8 12' LINTEL
SCALE: NONE

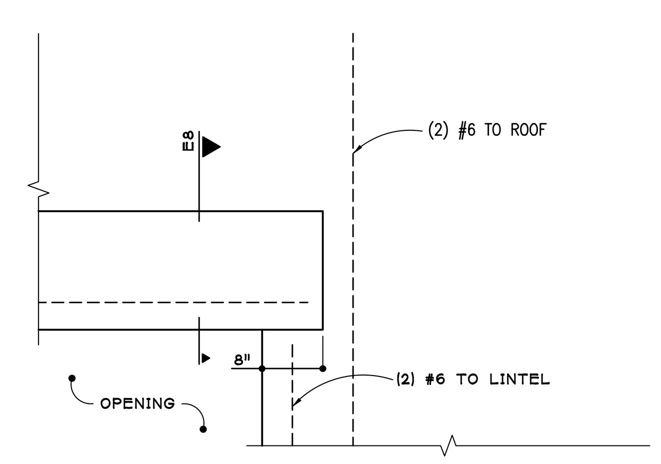

F6 BEARING
SCALE: NONE

100% CONSTRUCTION DOCUMENTS

LAURENE, RICKHER & SORRELL, P.C.
Consulting Structural Engineers
8701 RED OAK BLVD. SUITE 500
CHARLOTTE, NORTH CAROLINA 28217
PHONE 704-522-0495 FAX 704-522-0499
EMAIL mail@lrspc.net WEB www.lrspc.net

LRS #11370

REVISION NO.	REVISION DESCRIPTION	By	Date
Revisions			

Department of Veterans Affairs
William Jennings Bryan Dorn
VA Medical Center
6439 Garners Ferry Road
Columbia, SC 29209

SEAL

Architect/Engineer Address
LAURENE, RICKHER & SORRELL, P.C.
Consulting Structural Engineers
8701 RED OAK BLVD. SUITE 500
CHARLOTTE, NORTH CAROLINA 28217
PHONE 704-522-0495 FAX 704-522-0499
EMAIL mail@lrspc.net WEB www.lrspc.net
Harrell, Saltrick & Hopper
Design & Management Solutions for the Built Environment
8016 TOWER POINT DRIVE
CHARLOTTE, NC 28227
P 704.814.1320
F 704.321.0833
WWW.HSHPC.COM

COPYRIGHT © 2011 HARRELL SALTRICK & HOPPER, PC

HSH PROJECT # 11015

Recommended Approvals:	
1. MEDICAL DIRECTOR	6. OPERATIONS SERVICE LINE MANAGER
2. ASSOCIATE DIRECTOR	7. INFECTION CONTROL MANAGER
3. CHIEF OF STAFF	8. SAFETY MANAGER
4. ASSOC. DIRECTOR	9. GENERAL ENGINEER
5. SERVICE LINE MGRS.	10. COTR

Drawing Title: TYPICAL DETAILS

★ BUILDING IS FULLY SPRINKLERED ★

Project Title: REPLACE BOILER PLANT/ COGEN/CHP

Date: APRIL 30, 2012

Project Number: 544-11-101

Drawn: RJM | Building Number: 21 | AutoCAD File Name:

Checked: MEH | Reviewed: | Const. Contract No.:

DRAWING No. SS002

Veterans Affairs