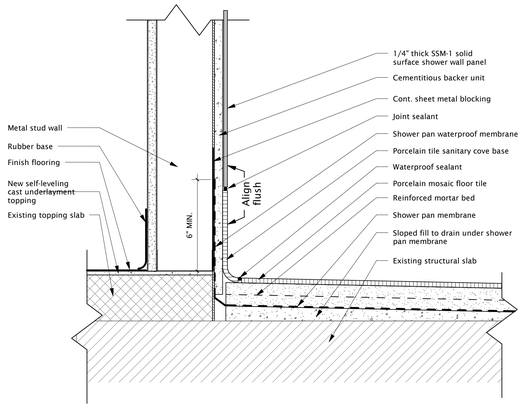

1 A303 Patient Toilet/Shower - Detail at Shower Wall
3" = 1'-0"

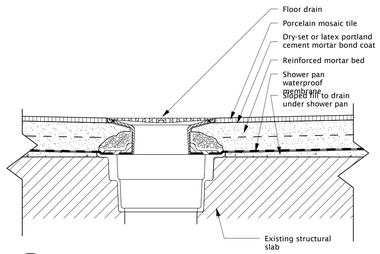

2 A303 Patient Toilet/Shower - Detail at Floor Drain
3" = 1'-0"

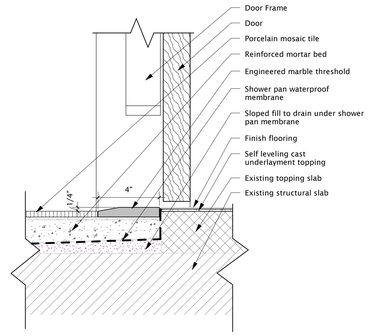

3 A303 Patient Toilet/Shower - Detail at Door Threshold
3" = 1'-0"

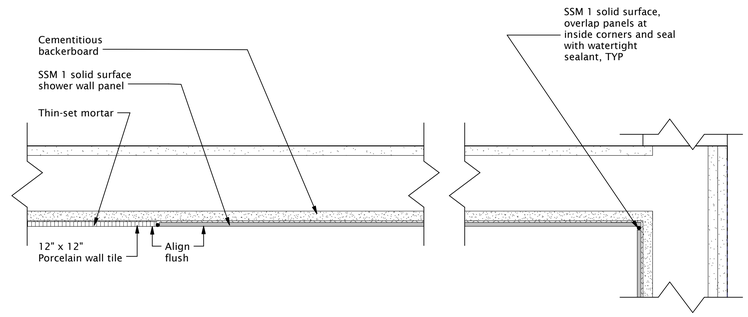

4 A303 Patient Toilet/Shower Wall - Plan Detail - Typ.
3" = 1'-0"

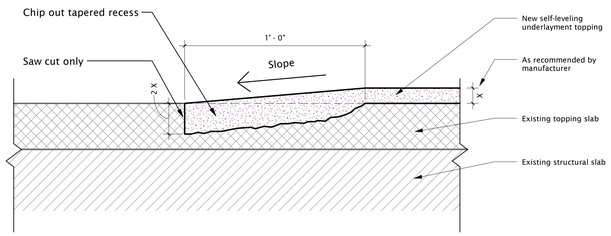

5 A303 Self-Leveling Topping - Detail at Transition
3" = 1'-0"

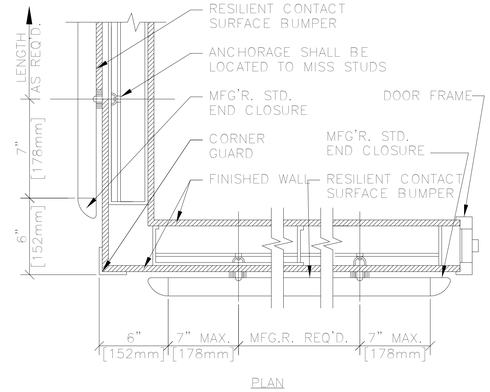

6 A303 Wall Guard Detail - Plan
Not to Scale

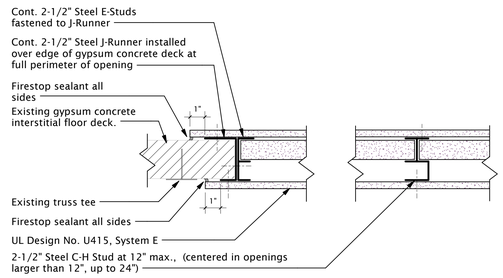

NOTE: When the existing conditions do not permit proper installation of the various components shown in this detail, the contractor shall:
1- Grind and/or saw cut as necessary to make opening sides vertical and square.
2- Saw cut as necessary to modify round openings larger than 7" diameter to make rectangular.

7 A303 Interstitial Floor Deck Repair Detail At Rectangular Openings
3" = 1'-0"

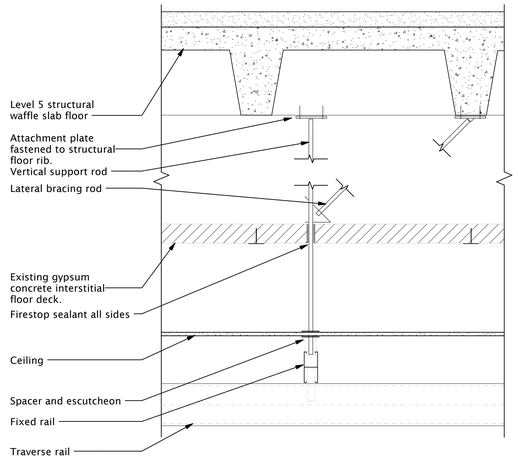

Note: All lift track items shown are schematic in nature. Layout, components, method of installation, structural calculations are the responsibility of the lift vendor. Lift vendor shall be responsible for the furnishing and the installation of all of the items shown plus any other(s) that the vendor considers necessary to provide a complete turnkey job.

12 A303 Patient Lift Support Detail
1 1/2" = 1'-0"

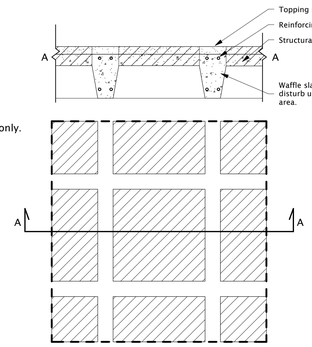

NOTES

1. Holes may be placed in shaded areas only.
2. Maximum voided shear area = 10%
3. Holes shall be core drilled only.

8 A303 Structural Slab - Anchor Detail
3/4" = 1'-0"

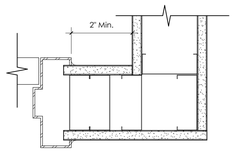

9 A303 Interior Partition - Plan Detail at Corner Condition
3" = 1'-0"

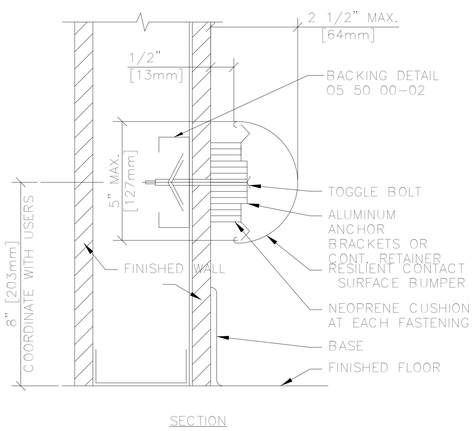

10 A303 Wall Guard Detail - Section
Not to Scale

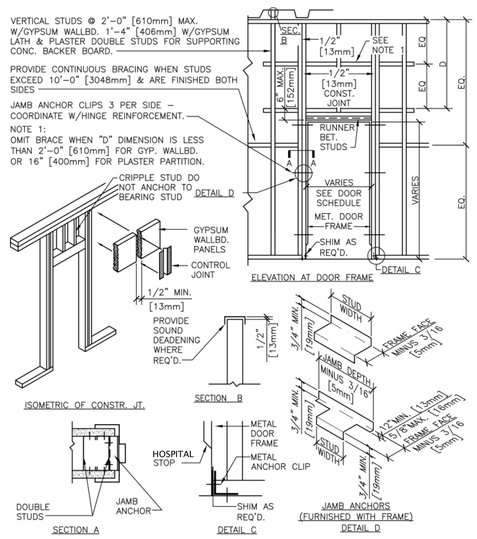

11 A303 Int. Partition -Typ. Door Framing Detail
1/8" = 1'-0"

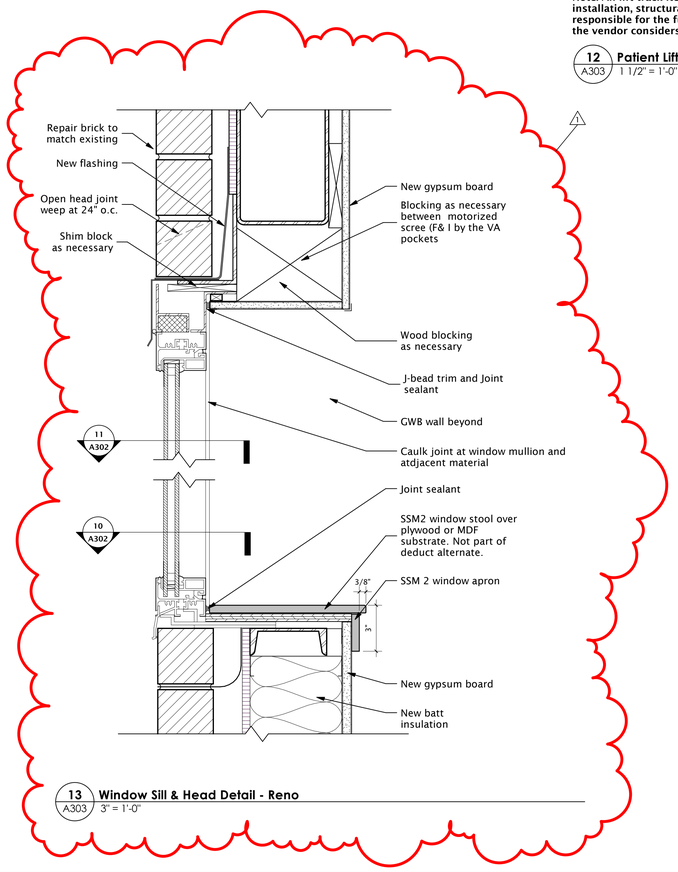

13 A303 Window Sill & Head Detail - Reno
3" = 1'-0"

ROUGHTON•NICKELSON•DE LUCA
Architects, PA
3608 University Drive, Suite 204
Durham, NC 27707
T 919.490.1266 F 919.490.1396
www.RNDpa.com

ROUGHTON NICKELSON DE LUCA ARCHITECTS PA
REGISTERED ARCHITECTURAL CORPORATION
CERT. NO. 400
DURHAM, N. C.
NORTH CAROLINA

COMMONWEALTH OF VIRGINIA
Gustavo C. De Luca
0401012343
ARCHITECT
6/12/2013

REVISIONS

REV.	DESCRIPTION	DATE
1	Addendum # 2	11/18/13

© 2013 Roughton Nickelson De Luca Architects, PA. These drawings and specifications are instruments of service whose ownership and copyright are transferred to the US Department of Veterans Affairs(client) upon project completion, under the following conditions. Their use is restricted to the original site for which they were prepared and publication there-of is expressly limited to such use. The documents are *project-specific* and are not intended for re-use on other projects. Any re-use by the client without the involvement of Roughton Nickelson De Luca Architects (RND) will be at the client's sole risk. The client agrees to defend, indemnify, and hold RND harmless from any claims brought against RND arising out of the re-use. RND reserves the right to re-use standard details of the contract documents.

RECOMMEND APPROVAL

Requestor:	Date:
Chief of Service:	Date:
Infection Control:	Date:
Chief of Staff:	Date:
Assoc. Med. Ctr. Dir.:	Date:

Drawing Title:
Details

Approved Chief, Engineering Svc.	Date:
APPROVED BY: MEDICAL CENTER DIRECTOR	Date:

Project Title:
Improve Patient Privacy 4D/C Richmond VA

Building No.	Designed by:	Drawn by:	Checked by:
Main	GDL	RS	GDL

Location
1201 Broad Rock Blvd Richmond, VA 23224

Date 06/12/2013

Project No. Owner Proj. # 652-11-112

Project ID No. RND 1232

DRAWING NO.
A303
Sheet of

Department of VETERANS AFFAIRS

11/18/2013 3:15:46 PM