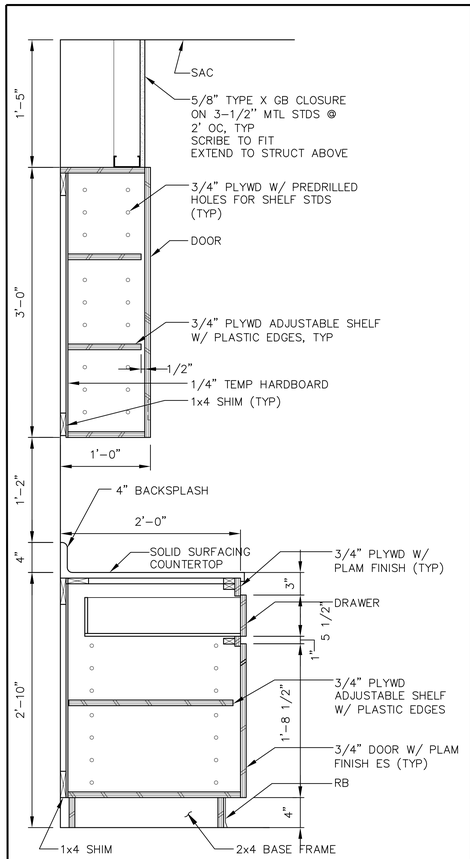

1 SECTION – CASEWORK
AF601AS503 SCALE: 3" = 1'-0"

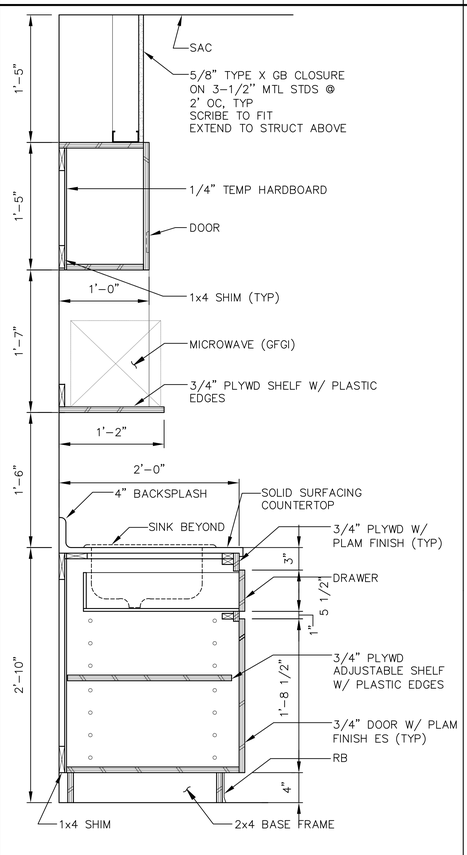

2 SECTION – CASEWORK
AS402AS503 SCALE: 6" = 1'-0"

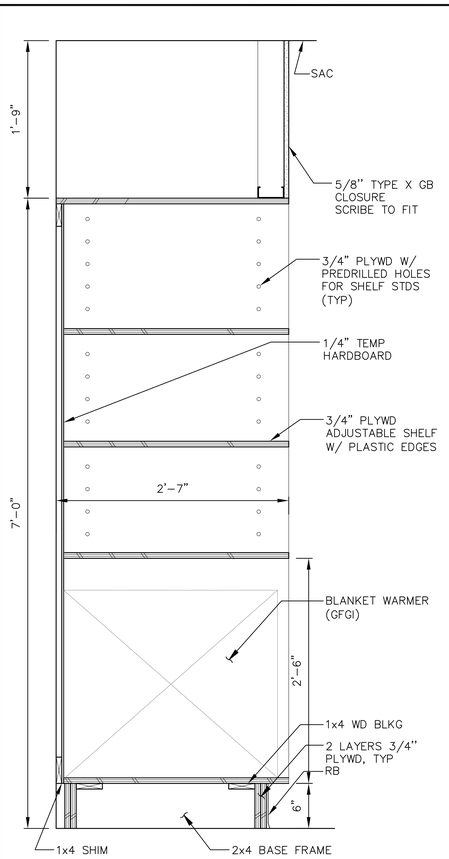

3 SECTION – CASEWORK
AS401AS503 SCALE: 6" = 1'-0"

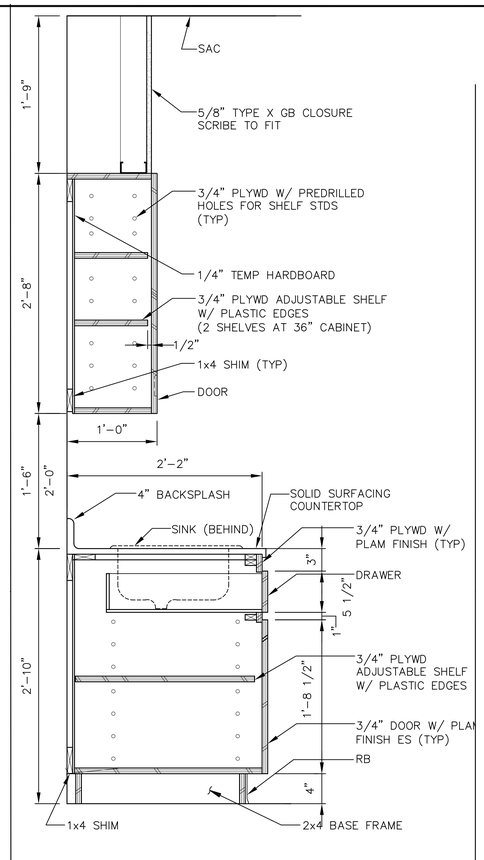

4 SECTION – CASEWORK
AF601AS503 SCALE: 3" = 1'-0"

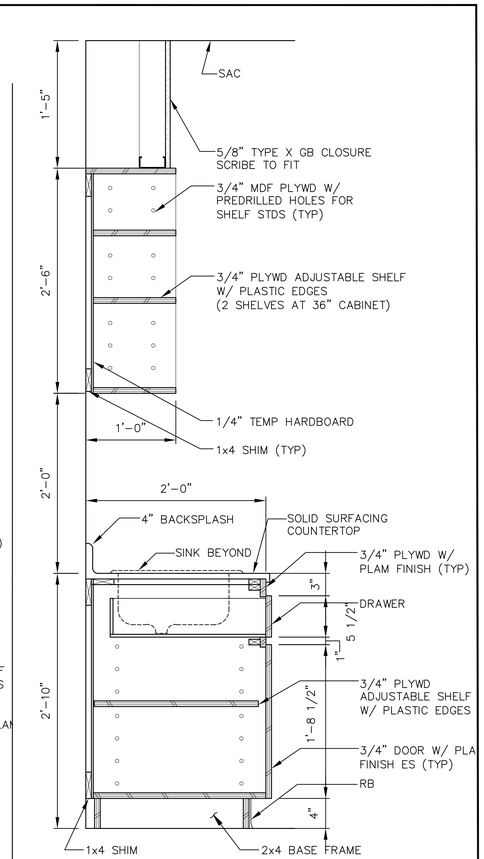

5 SECTION – CASEWORK
AF601AS503 SCALE: 3" = 1'-0"

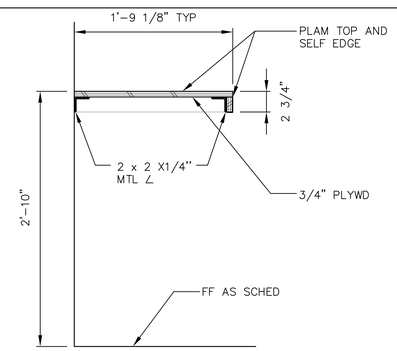

6 SECTION – CASEWORK
AF601AS503 SCALE: 3" = 1'-0"

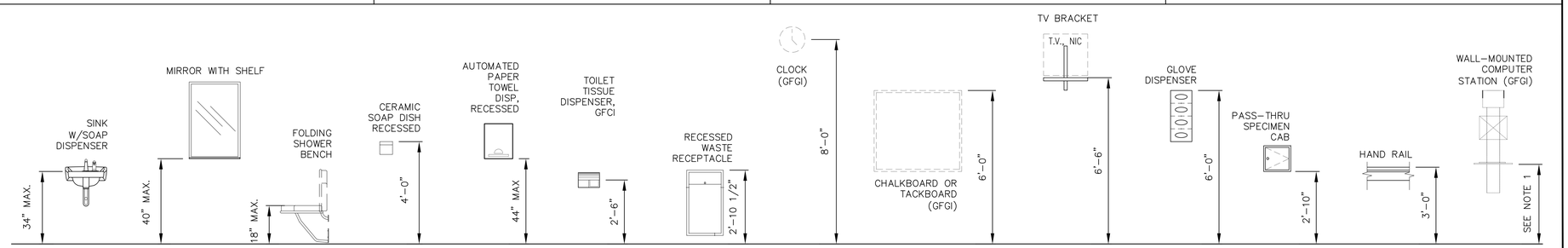

7 TYPICAL MOUNTING HEIGHTS
AF601AS503 SCALE: 3" = 1'-0"

GRAPHIC SCALES:
3" = 1'-0" 1" 0 3" 6" 9" 1'
1 1/2" = 1'-0" 12" 9" 6" 3" 0 1'

100% DESIGN - NOT FOR CONSTRUCTION

Revisions:	Date

CONSULTANTS:

DUANE H. BOX, STATE OF WASHINGTON, REGISTERED ARCHITECT

ARCHITECT/ENGINEERS:
MANDEVILLE · BERGE · BOX
ARCHITECTS ENGINEERS PLANNERS
500 UNION ST. SEATTLE, WA 98101

Drawing Title: CASEWORK AND TYPICAL MOUNTING HEIGHTS

Approved: Project Director

Project Title: Design Services to Remodel Building 100, 4E MICU CCU

Location: PUGET SOUND HEALTH CARE SYSTEM, SEATTLE 1660 SOUTH COLUMBIAN WAY, SEATTLE, WA 98108

Date: 01 OCT 2013 | Checked: SCB | Drawn: BKL

Project Number: 663-C21943
Building Number: 100
Drawing Number: 100-AS701
Dwg. 28 of 77

Office of Construction and Facilities Management

VA FORM 08-6231

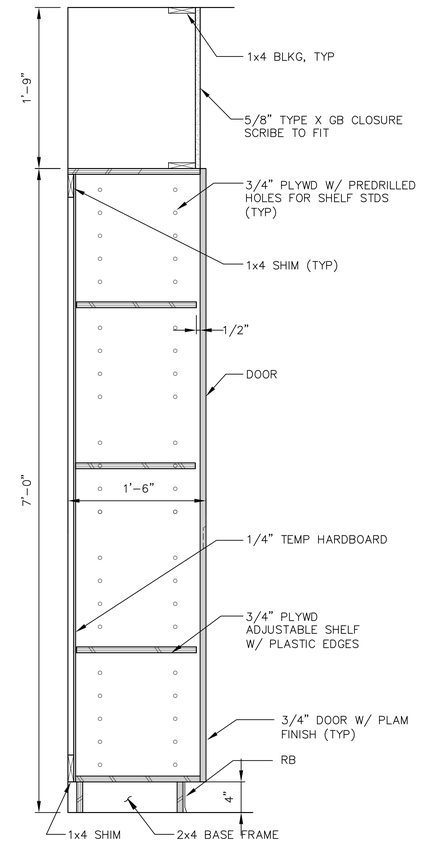

1 SECTION – CASEWORK
AS303AS702 SCALE: 1-1/2" = 1'-0"

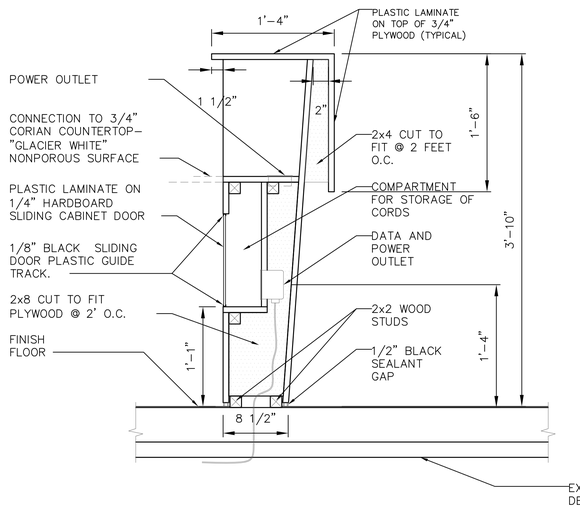

2 SECTION – NURSE STATION
AS405AS702 SCALE: 1-1/2" = 1'-0"

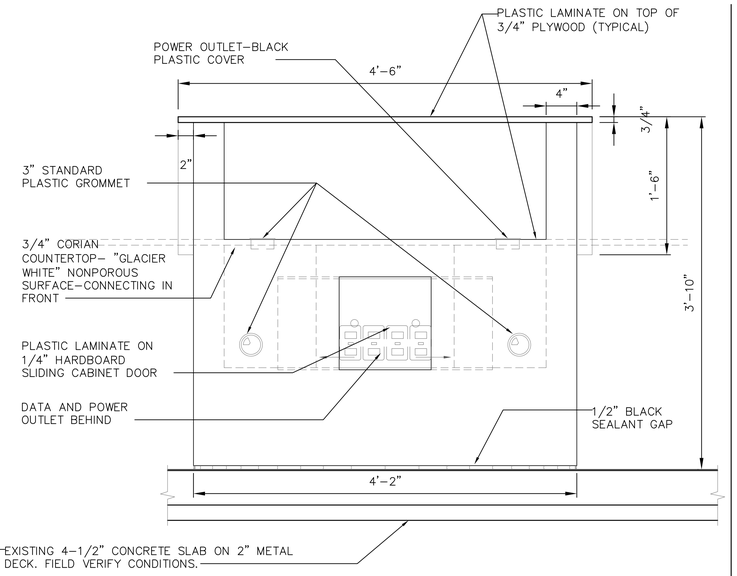

3 SECTION – NURSE STATION
AS405AS702 SCALE: 1-1/2" = 1'-0"

4 NOT USED
SCALE: 1-1/2" = 1'-0"

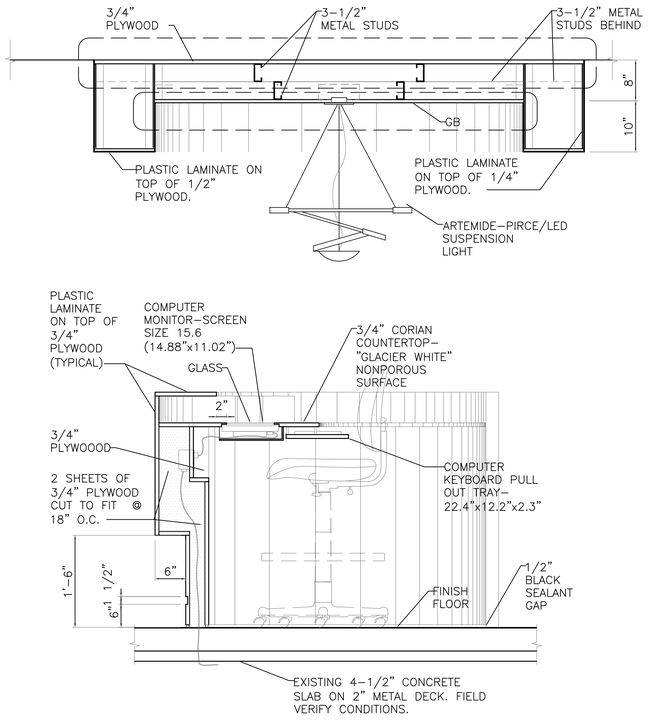

6 SECTION – NURSE STATION
AS405AS702 SCALE: 1" = 1'-0"

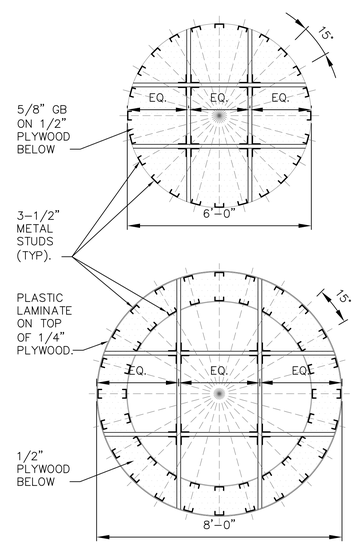

7 SECTION – CEILING
AS405AS702 SCALE: 1/2" = 1'-0"

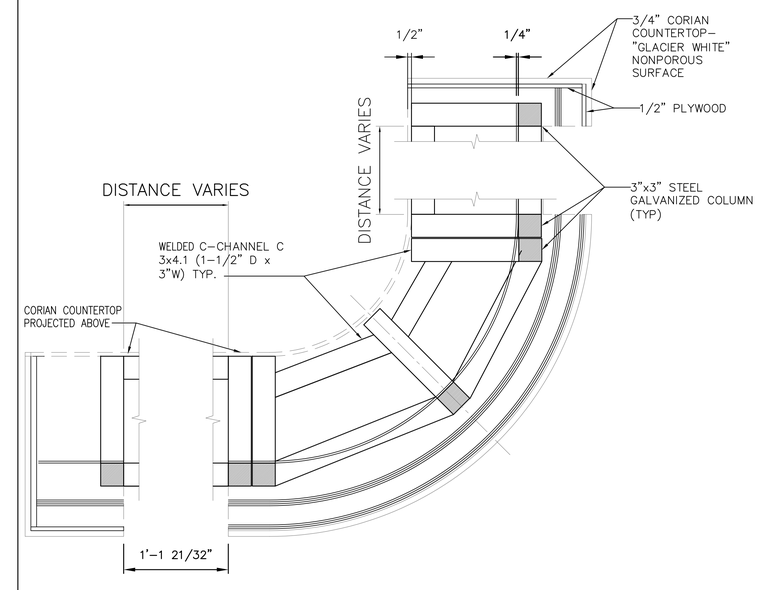

8 SECTION – NURSE STATION, TYP
AS405AS702 SCALE: 1/2" = 1'-0"

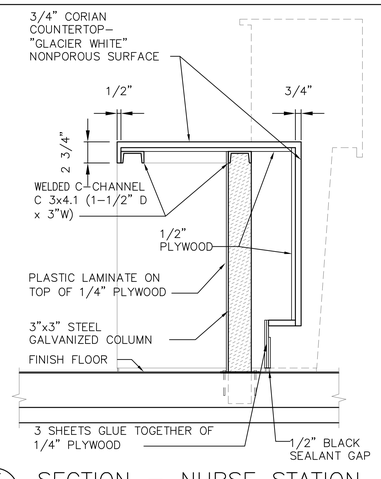

5 SECTION – NURSE STATION
AS405AS702 SCALE: 1-1/2" = 1'-0"

GRAPHIC SCALES:
3" = 1'-0" 1" 0 3" 6" 9" 1'
1 1/2" = 1'-0" 12" 9" 6" 3" 0 1'

100% DESIGN - NOT FOR CONSTRUCTION

Revisions:	Date

CONSULTANTS:

REGISTERED ARCHITECT
DUANE H. BOX
STATE OF WASHINGTON

ARCHITECT/ENGINEERS:
MANDEVILLE · BERGE · BOX
ARCHITECTS ENGINEERS PLANNERS
500 UNION ST. SEATTLE, WA 98101

Drawing Title: CASEWORK
Approved: Project Director

Project Title: Design Services to Remodel Building 100, 4E MICU CCU
Project Number: 663-C21943
Building Number: 100
Location: PUGET SOUND HEALTH CARE SYSTEM, SEATTLE 1660 SOUTH COLUMBIAN WAY, SEATTLE, WA 98108
Drawing Number: 100-AS702
Date: 01 OCT 2013 | Checked: SCB | Drawn: BKL
Dwg. 29 of 77

Office of Construction and Facilities Management

VA FORM 08-6231