LEGEND

SYMBOL	LIGHTING
	WALL MOUNTED FIXTURE
	SITE POLE MOUNTED FIXTURE
SYMBOL	**COMMUNICATIONS**
	SECURITY CAMERA
	FLOOR MOUNT COMMUNICATIONS RACK
SYMBOL	**DEVICES & POWER**
	RECEPTACLE - DUPLEX - HOSPITAL GRADE EMERGENCY GFI GROUND FAULT INTERRUPT S SURGE PROTECTED
J	JUNCTION BOX
	EMERGENCY PUSHBUTTON
	SPECIAL PURPOSE CONNECTION, WORK AS NOTED
	ELECTRIC MOTOR CONNECTION
	CONTROL PANEL
	EXISTING PANELBOARD, SURFACE MOUNTED
	CONTROL PANEL

SYMBOL	ABBREVIATIONS AND MISCELLANEOUS
AC	ABOVE COUNTER, 4" ABOVE BACK SPLASH
AFG	ABOVE FINISHED GRADE
AFF	ABOVE FINISHED FLOOR
BLG	BELOW GRADE
BOD	BOTTOM OF DEVICE
C	CONDUIT
COD	CENTER OF DEVICE
CU	COPPER
EC	ELECTRICAL CONTRACTOR
GC	GENERAL CONTRACTOR
GND	GROUND
TTB	TELEPHONE TERMINAL BOARD
U/G	UNDERGROUND
W/	WITH
WM	WIRE MOLD
WP	WEATHER PROOF
BN1L-2,4,6	CIRCUIT DESIGNATION, PANELBOARD BN1L, CIRCUITS 2, 4, 6
1/E5.2	INDICATES DETAIL 1 ON SHEET E5.2
1	SHEET WORK NOTE
	HOME RUN TO PANELS, NUMBER OF ARROWS INDICATES NUMBER OF CIRCUITS
	CONDUIT CONCEALED IN CEILING OR WALL
	CONDUIT CONCEALED UNDER FLOOR
LV	LOW VOLTAGE CIRCUIT
	CIRCUIT, NUMBER OF HASH MARKS INDICATES NUMBER OF CONDUCTORS IN CABLE/RACEWAY. GROUND WIRE NOT SHOWN BUT SHALL BE INCLUDED. NO HASH MARKS INDICATES 2 CONDUCTORS PLUS GROUND.

INTERIOR BOX MOUNTING HEIGHTS

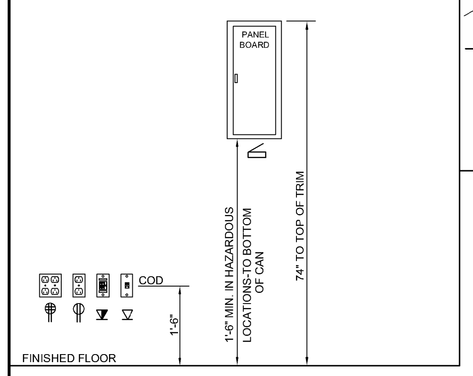

GENERAL NOTES

1. COMPLY WITH LATEST NFPA 70 AND NFPA 30A.
2. CONDUCTORS FOR POWER SHALL BE THWN OR THHN AND ENCLOSED IN CONDUIT.
3. A SEPARATE EQUIPMENT GROUNDING CONDUCTOR SHALL BE INCLUDED WITH ALL POWER CIRCUITS.

PANEL: 'FS'

LOCATION: RACK | AMPS: 30 | MINIMUM AIC RATING: 10,000
TYPE OF MAIN: MLO | VOLTAGE: 208Y/120 | MOUNTING TYPE: SURFACE, '3R'
MANUFACTURER: SEE SPECS | PHASE: 3 | NOTES:
MODEL TYPE: BOLT-ON | WIRES: 4

NOTES	CIRCUIT DESCRIPTION	CKT	BRK	POL	A		B		C		POL	BRK	CKT	CIRCUIT DESCRIPTION	NOTES
	POS	1	20	2	1248	500					1	15	2	DATA/COMM J-BOX HEAT	
	- -	3	-	-			1248	0			1	15	4	SPARE	
	LIGHTS	5	15	1					326	200	1	15	6	SECURITY CAMERAS	
	SPARE	7	15	1	0	0					1	15	8	SPARE	
	SPARE	9	15	1			0	0			1	15	10	SPARE	
	SPARE	11	15	1					0	200	1	15	12	TANK CONTROLLER (VEEDER-ROOT)	
				Total Load:	1748		1248		526						
				Total Amps:	15		10		4						
	TOTAL WATTS							3522							
	TOTAL AMPS							10							

LIGHT FIXTURE SCHEDULE

TYPE	MAN.	CATALOG NUMBER	LOC	TYPE	HT	TYPE	NO	VOLT	WATT	NOTES
A1	LITHONIA (OR APPROVED EQUAL)	CSX2-LED-3-30B530/50K-SR3-MVOLT-SPA-PER-DS-DDBXD	POLE		20'	LED		MVOLT	168	NOTE #1
	LITHONIA (OR APPROVED EQUAL)	SSS-20-4C-DM19AS-CPL12XX-DDBXD								POLE
	WATTSTOPPER	EW-205-24-G W/ POWER PACK								NOTE #2

NOTES:
1. FIXTURE HAS 3 LIGHT ENGINES, 2 ON MOTION SENSOR, AND 1 ON PHOTOCELL ONLY.
2. MOUNT OCCUPANCY SENSOR AT 10' UP ON FIXTURE SIDE OF POLE.

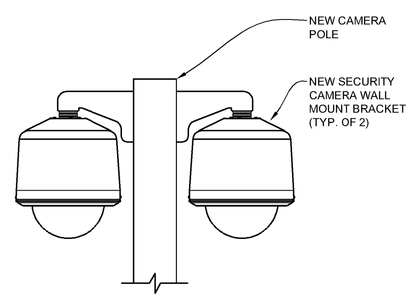

POLE: LITHONIA #SSS-10-4G-DDBXD W/ VIBRATION DAMPENER. FIELD DRILL FOR CAMERA MOUNTS.

6 E2 POLE MOUNTED CAMERA DETAIL — NOT TO SCALE

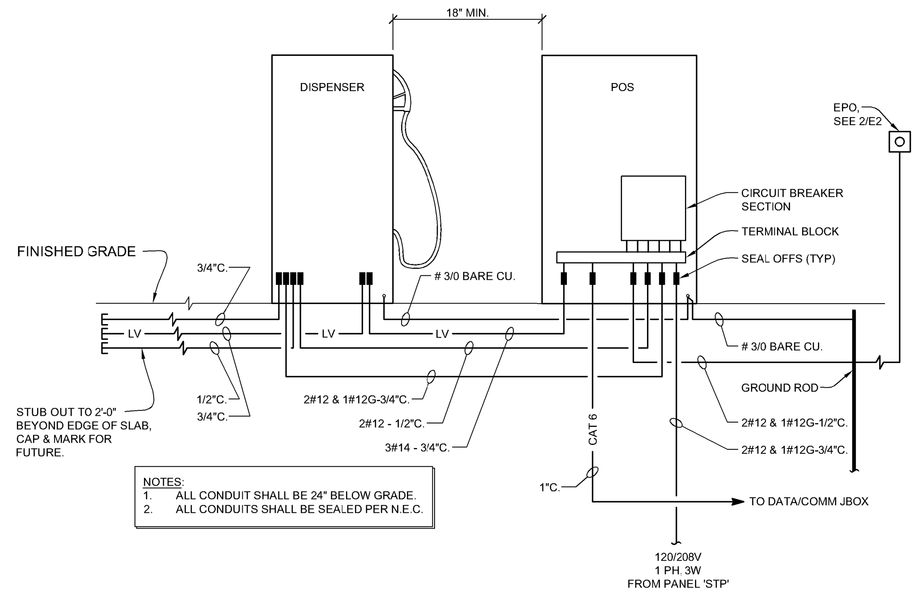

NOTES:
1. ALL CONDUIT SHALL BE 24" BELOW GRADE.
2. ALL CONDUITS SHALL BE SEALED PER N.E.C.

1 E2 SYSTEM RISER DIAGRAM — NO SCALE

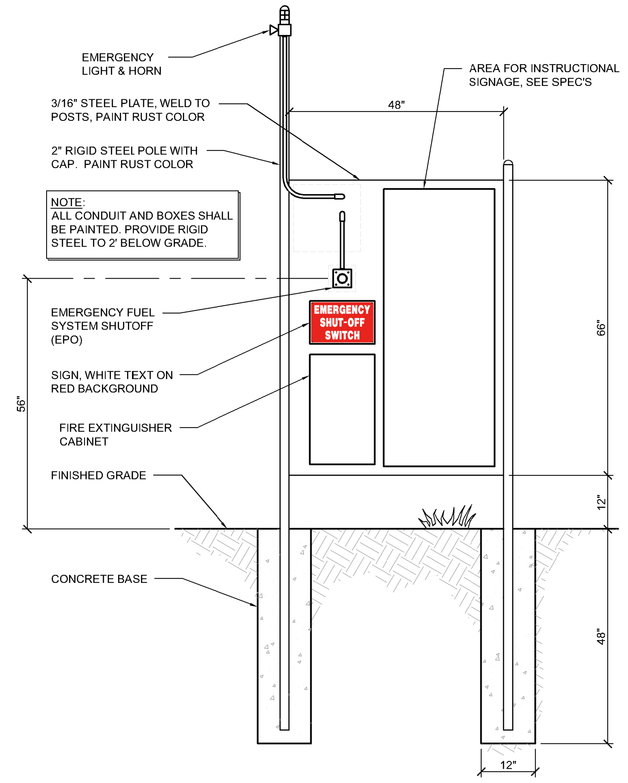

2 E2 FRONT SIDE SITE ELECTRICAL EQUIPMENT MOUNTING DETAIL — NO SCALE

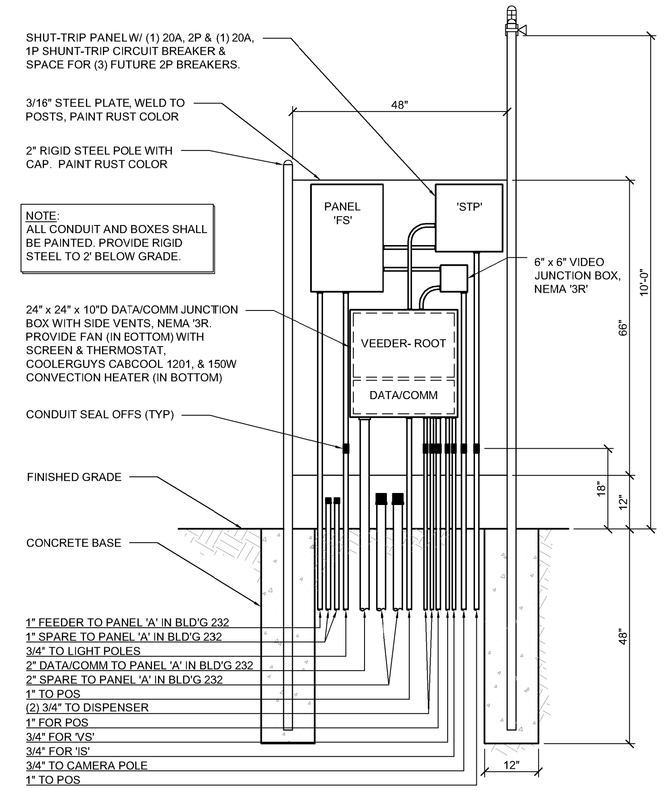

3 E2 BACK SIDE SITE ELECTRICAL EQUIPMENT MOUNTING DETAIL — NO SCALE

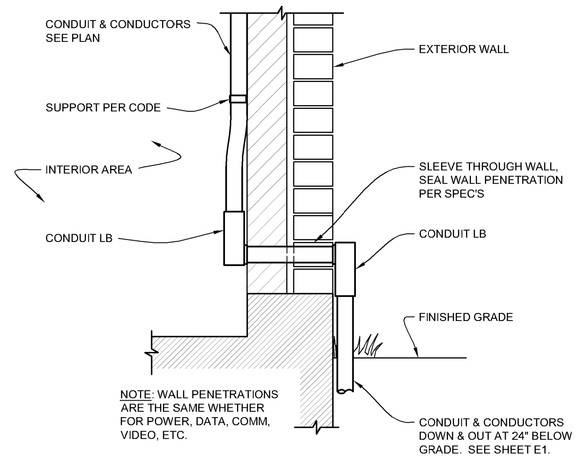

4 E2 WALL PENETRATION DETAIL — NTS

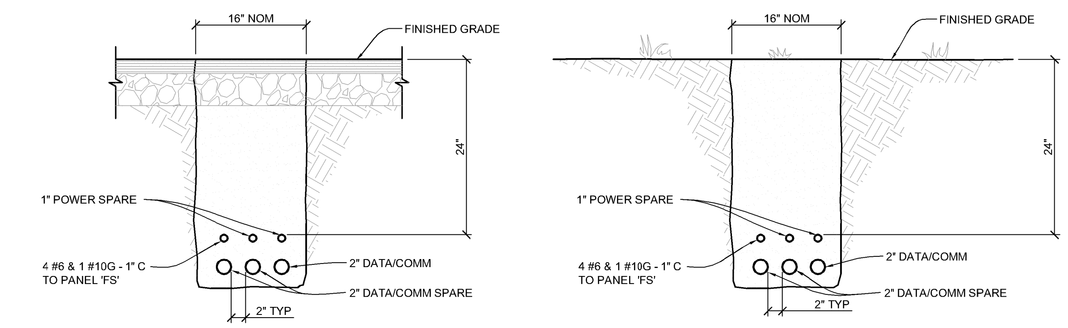

NOTES:
1. SPARE CONDUITS SHALL BE STUBBED UP TO 6" ABOVE FINISHED GRADE AT BUILDING 232 & CAPPED.
2. SEE DETAIL 1/C4 FOR FURTHER TRENCH SPECS.

5 E2 TRENCH DETAILS — NOT TO SCALE

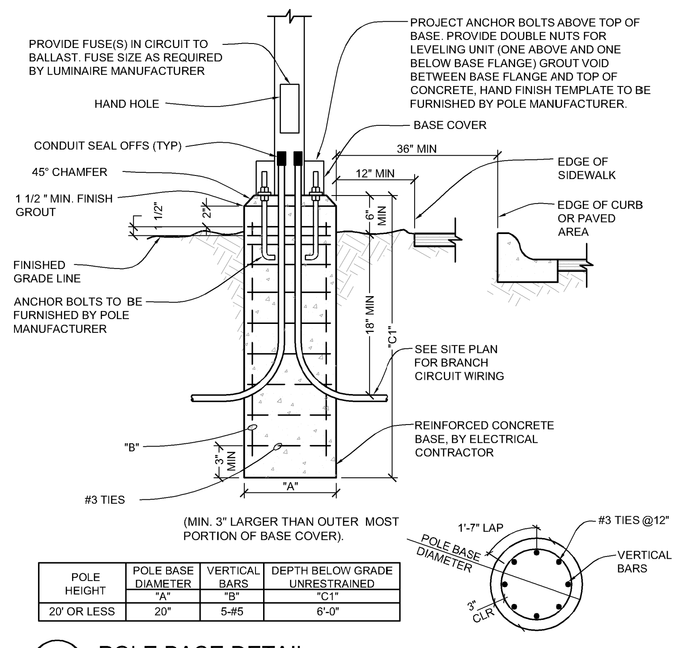

POLE HEIGHT	POLE BASE DIAMETER "A"	VERTICAL BARS "B"	DEPTH BELOW GRADE UNRESTRAINED "C1"
20' OR LESS	20"	5-#5	6'-0"

7 E2 POLE BASE DETAIL (SIMILAR FOR LIGHT & CAMERA POLE) — NOT TO SCALE

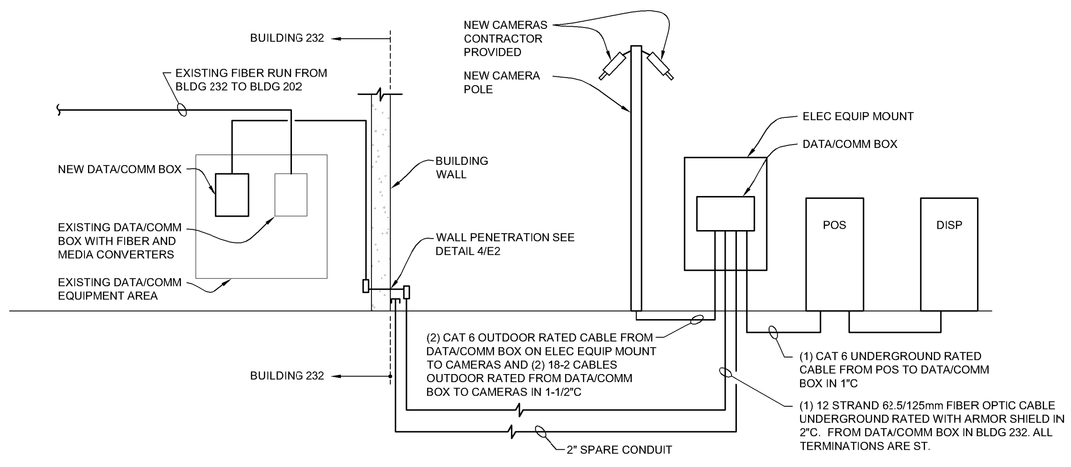

8 E2 COMMUNICATIONS RISER DIAGRAM — NO SCALE

Revisions: | Date

CONSULTANTS:

REGISTERED PROFESSIONAL ENGINEER — OREGON — GARY GLASSLEY — 10/24/2013 — EXPIRATION DATE: 06/30/15

ARCHITECT/ENGINEERS:

CTA®
1185 GROVE STREET
BOISE, IDAHO
P:208-336-4900/F:208-343-3531
WWW.CTAGROUP.COM

Drawing Title: ELECTRICAL SCHEDULES, DETAILS & DIAGRAMS

Project Title: WHITE CITY VA E85 FUELING STATION

Project Number: 692-342 VA 701-13-J-0090(WC)

Building Number: EAST OF 243

Approved: Project Director
APPROVED-BY-NAME
APPROVED-BY-TITLERANK
STATION-MNGT

Location: WHITE CITY MEDICAL CENTER, WHITE CITY, OREGON

Date: 10/24/2013 | Checked: KCB | Drawn: BCS

Drawing Number: E2 — Dwg. 9 of 9

Office of Construction and Facilities Management
Department of Veterans Affairs

VA FORM 08-6231

C:\WC\VSN20_E85\Elec\E2.dwg 10-23-13 05:21:41 PM govrg