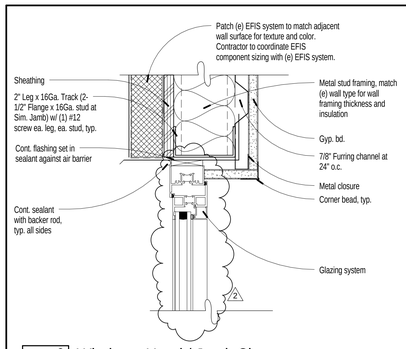

9 Window - Head / Jamb Sim.

3" = 1'-0"

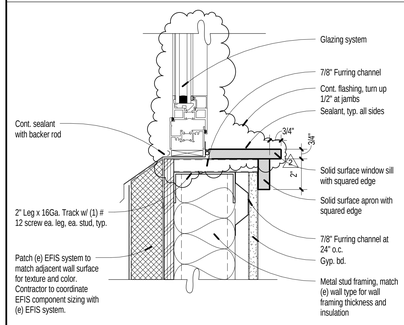

8 Window -Sill

3" = 1'-0"

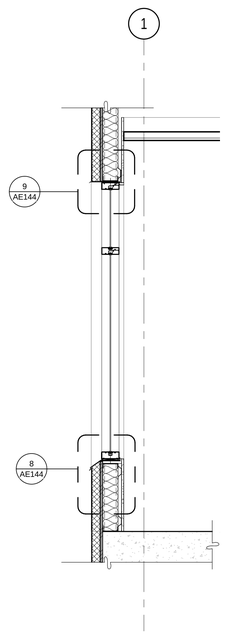

7 Section Detail

3/4" = 1'-0"

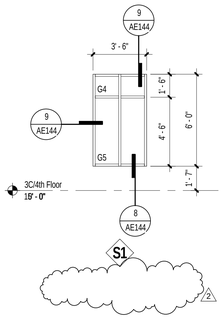

Glazing, Material, and Type Legend

Glazing Legend:

G1	1/4" Clear float glass
G2	1/4" Clear tempered glass
G3	Fire-rated glazing
G4	1" Insulated glass
G5	1" Insulated & tempered glass
G6	1" Spandrel glass
G7	5/8" Insulated & tempered glass

Material and Type Legend:

WV	Solid Core Wood Veneer-faced
HM	Steel Hollow Metal - painted
AL	Aluminum
GS	Galvanized Steel
SS	Stainless Steel
VD	Vault Door - see Spec.

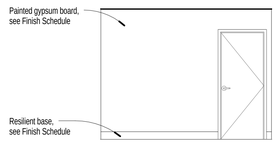

6 Staff Lounge B4263 - South

1/4" = 1'-0"

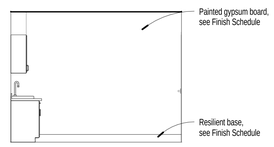

5 Staff Lounge B4263 - North

1/4" = 1'-0"

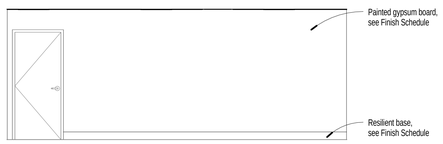

4 Staff Lounge B4263 - East

1/4" = 1'-0"

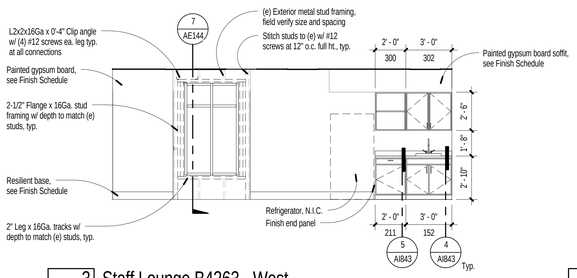

3 Staff Lounge B4263 - West

1/4" = 1'-0"

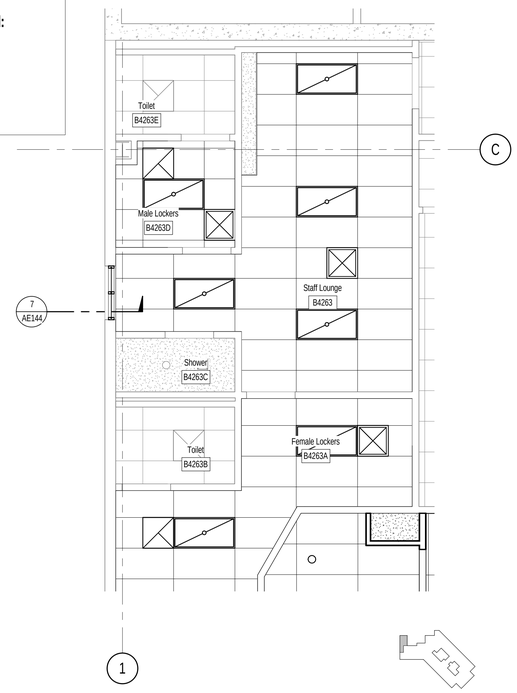

2 Enlarged Reflected Ceiling Plan

1/4" = 1'-0"

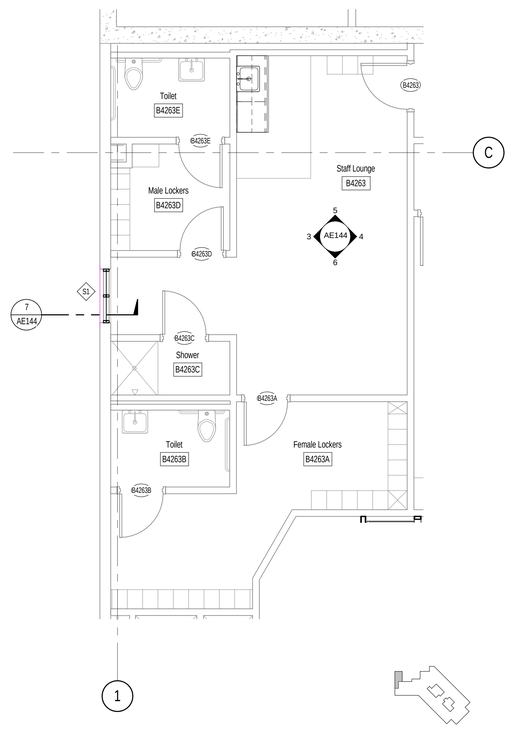

1 Equipment and Dimension Plan

1/4" = 1'-0"

Ceiling Plan Legend

- (e) Ceiling system and finishes to remain. Touch up and repair at ceilings affected by Alteration construction.
- Gypsum board ceiling, see Specifications for requirements. See suspended framing detail 3 / AE644
- 2' x 4' Acoustical Lay-in Ceiling System. Grid and tile layout as indicated on the Reflected Ceiling Plan. See Specifications for requirements of suspended grid and acoustic lay-in panels and see Finish Schedule for ceiling types. In rooms larger then 144 SF see detail 1 / AE644 for seismic bracing detail.
- 2' x 4' Acoustical Lay-in Ceiling Tiles in (e) grid.
- (e) 12" x 12" Acoustical Tile Ceiling System.
- Patient lift track, Arjo Maxi Sky 600 OFCI, refer to Structural drawings for bracing requirements
- 0' - 0" — Indicates the ceiling height, see Plan. Ceiling height above finish floor.
- 1x4 Fluorescent light fixture - see Electrical for size and type
- 2x4 Fluorescent light fixture - see Electrical for size and type
- 2x2 Fluorescent light fixture - see Electrical for size and type
- Recessed can light fixture - see Electrical for size and type
- Supply air diffuser - see Mechanical for size and type
- Return air diffuser - see Mechanical for size and type
- Exhaust air grille - see Mechanical for size and type
- Access door - see Project Manual for configuration and type. Door shall be rated in accordance with the rating of the ceiling it is installed within.

Sheet Notes

1. All door locations in gypsum board partitions not dimensioned will be 4" from the studs of perpendicular wall to door edge (U.N.O.).
2. All dimensions are from face-of-stud, face of CMU, or center of framed opening, unless noted otherwise.
3. For dimensions of masonry walls and rough openings, see the Structural drawings. Masonry dimensions shown on this plan are for reference only. Any discrepancies found between the dimensions on this sheet and the Structural drawings shall be brought to the immediate attention of the Architect.
4. Provide 6" wide, 24 gage flat strap blocking behind all fixtures and wall mounted accessories. This includes cabinets and any other items that are wall mounted. Blocking shall span a minimum of three studs and be connected to each stud with a minimum of two screws.
5. ~~Provide 2x6 solid wood blocking behind all fixtures and wall mounted accessories. This includes cabinets and any other items that are wall mounted.~~
6. Refer to Mechanical and Electrical plans for equipment related to those disciplines. All required equipment not necessarily noted on this sheet.
7. Room Signage:
   Provide signs adjacent to doors where indicated on plan. Signs will be ADA compliant and the text will be that indicated on the Room Signage Schedule.
8. Openings, pockets, etc. shall not be placed in slabs, beams, columns, walls, etc., unless specifically detailed on the drawings.
9. Cap all open ends in structural steel components, typical.
10. Exposed concrete floors will have all exposed construction and control joints sealed with a polyurethane sealant bead (backer rod where required).
11. Provide a rubber-vinyl reducer or transition trim at all intersections of carpet and resilient tile, carpet and vinyl sheet goods, or at all edges of carpet that abut a raised or lowered surface of dissimilar material. Note: Provide replacement transitions or reducers only where removal of existing flooring is not required for transition of reducer trim replacement.
12. Systems furniture and patient beds are shown for reference only. Systems furniture and patient beds are to be provided by Owner and installed under separate contract.
13. Kitchen equipment is Owner supplied and Contractor installed. Contractor is to provide rough-ins for Plumbing and Electrical. The Contractor shall also provide the Mechanical exhaust, exhaust hood and make-up air. The Contractor shall complete the final hookup and installation of the kitchen equipment as provided by the Owner. Coordinate exact locations of rough-ins with the owner's kitchen consultant prior to construction. See Food Service, Mechanical, Plumbing and Electrical Drawings.
14. There should be no surface mounted conduit. All conduit to be concealed.
15. Plumbing fixtures that are not dimensioned shall be located horizontally in the same place as the existing fixture that was removed, see Plumbing drawings.
16. Sand, grind, or patch (e) concrete floor as required to accommodate new construction. Install leveling compound as required.
17. Where new gypsum board walls abut existing CMU scribe to fit tightly and caulk. Rated walls shall receive fire rated sealant where required to maintain rating.
18. Repair and repaint the entire wall where alteration work is performed, U.N.O. Paint color to match (e) walls and areas adjacent.
19. All touch up and new painting will be as follows:
    Bottom coat: Latex primer
    Intermediate coat and top coat: Acrylic Latex Enamel

    Sheen shall match existing adjacent surfaces. Contractor to coordinate paint manufacturer with Owner to match (e) maintenance paint stock.
20. Texture all existing gypsum board walls to match texture of new walls where noted.
21. Where plumbing fixtures are to be removed and no new fixture is to be installed, patch water supply hole with gypsum board, texture and paint to match wall. At waste opening, provide new chrome clean out cover plate with vandal resistant screw. Plate to be attached to cap inside chase. Provide interior sealant around perimeter of new cover plate.
22. Where plumbing fixtures are to be installed, provide water resistant gypsum board.
23. The Contractor shall clean all existing ceramic tile prior to installing and new fixtures and toilet partitions.
24. Protect (e) Telecom & Electrical Equipment closets with a dust control barrier during construction.

Bid Documents

Number	Revision	Date
2	Addendum #2	11/27/13
3	Addendum #3	12/05/13

CONSULTANTS:

MAX HERSHENOW REGISTERED 2260 08/22/13 ARCHITECT STATE OF NEVADA

Professional Seal

ARCHITECT/ENGINEERS:
H+K ARCHITECTS
5485 Reno Corporate Drive, Suite 100
Reno, Nevada 89511-2262
P 775+332+6640
F 775+332+6642
hkarchitects.com

Drawings Title: Enlarged Floor Plan/Dimension Plan and Interior Elevations

Approved: Project Director

Project Title: Renovation of 3C/4th Floor to Single Patient Rooms

Location: 975 Kirman Avenue, Reno NV 89520

Date: August 22, 2013 | Checked: MMH | Drawn: EL

Project Number: 654-12-724

Building Number: Bldg. 12

Drawing Number: AE144

Office of Construction and Facilities Management

Department of Veterans Affairs

VA FORM 08-6231

12/5/2013 8:39:19 AM M:\Active\HC011 project\11-1201\11-1201L Reno\11-1201L VA 3C-4th Floor Renovations.rvt