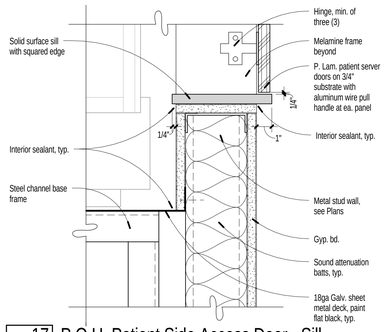

17 P.O.U. Patient Side Access Door - Sill

3" = 1'-0"

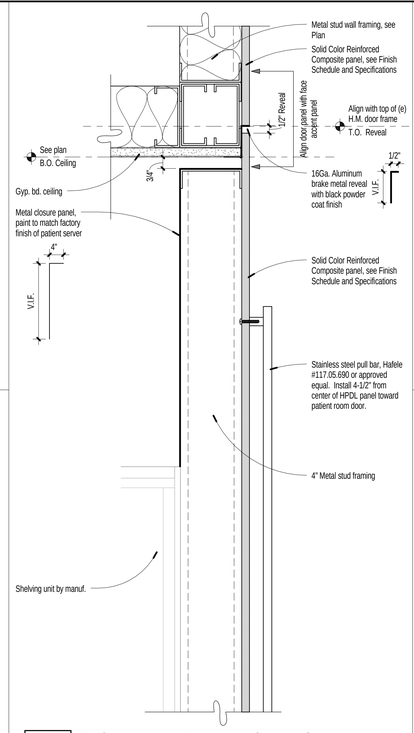

14 Patient Server Door Panel - Head

3" = 1'-0"

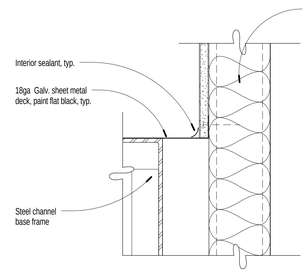

11 Patient Server Floor Deck to Wall Framing

3" = 1'-0"

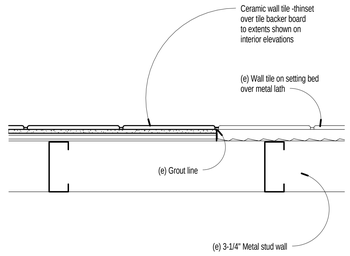

8 Wall Tile Patch

3" = 1'-0"

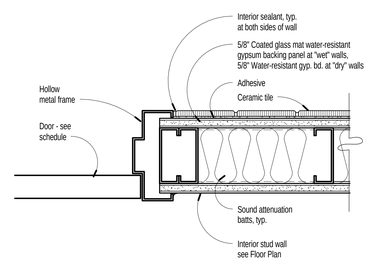

4 Ceramic Tile at Door Jamb

3" = 1'-0"

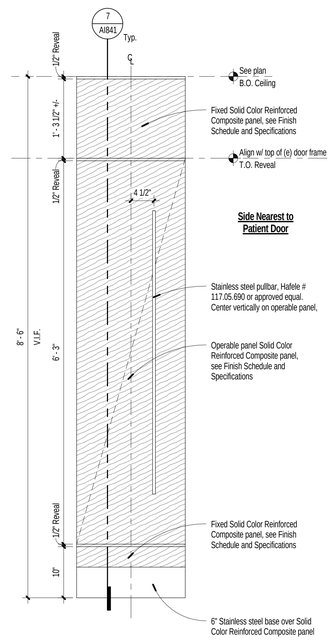

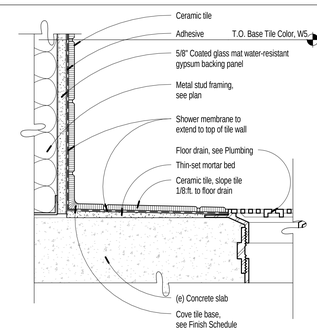

7 Ceramic Tile Wall to Floor at Shower

3" = 1'-0"

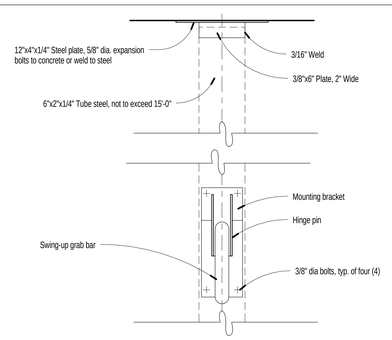

3 Swing-Up Grab Bar Detail - Front Elevation

1 1/2" = 1'-0"

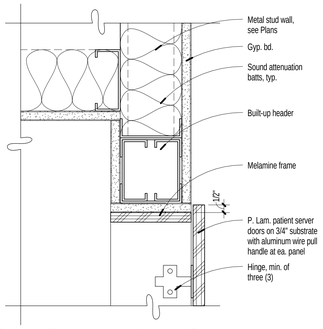

19 P.O.U. Patient Side Access Door - Head

3" = 1'-0"

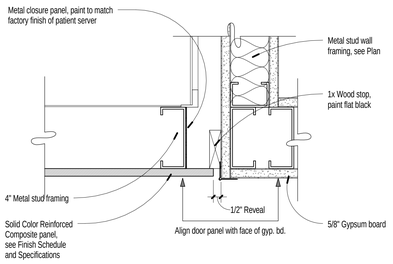

13 Patient Server Door Panel Jamb

3" = 1'-0"

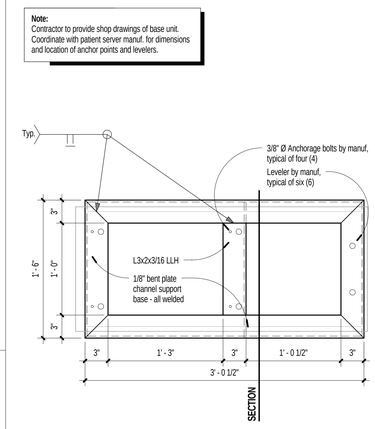

Plan

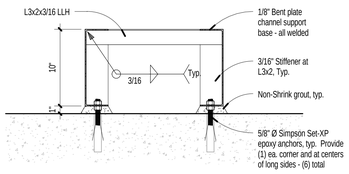

Section

10 Patient Server Steel Channel Base Frame

1 1/2" = 1'-0"

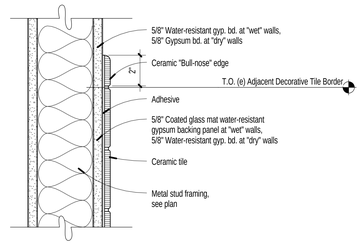

6 Ceramic Tile Wainscot

3" = 1'-0"

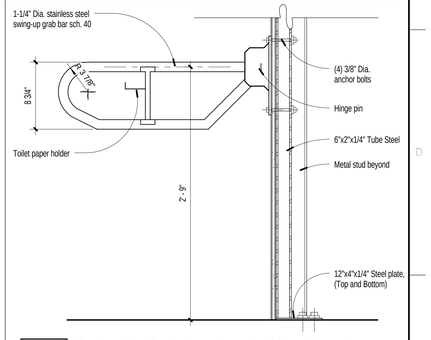

2 Swing-Up Grab Bar Detail - Side Elevation

1 1/2" = 1'-0"

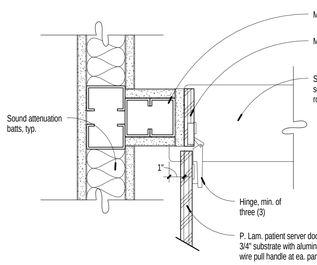

18 P.O.U. Patient Side Access Door - Jamb

3" = 1'-0"

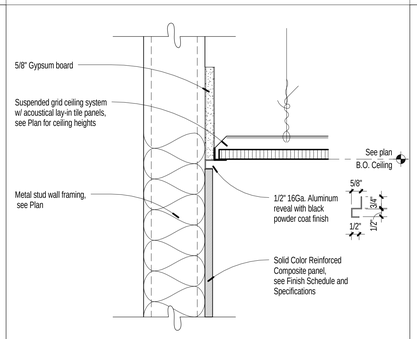

15 Patient Server Decorative Panel at Ceiling

3" = 1'-0"

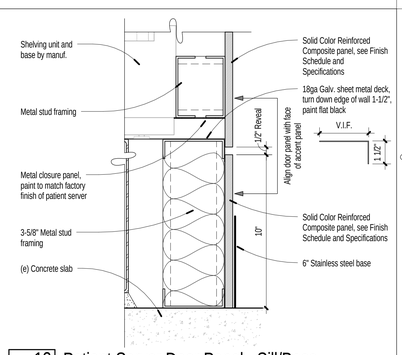

12 Patient Server Door Panel - Sill/Base

3" = 1'-0"

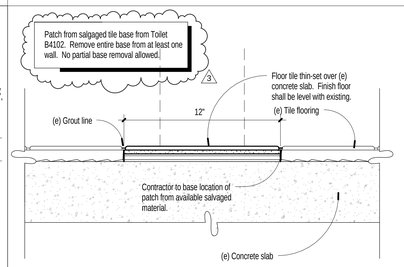

9 Marble Floor Tile Patch

3" = 1'-0"

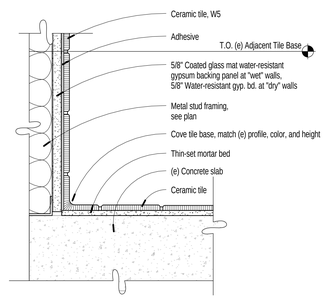

5 Ceramic Tile Wall to Floor

3" = 1'-0"

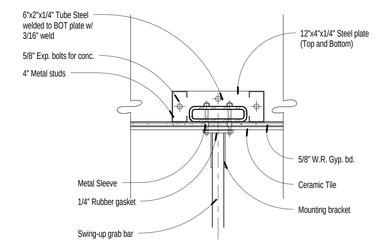

1 Swing-Up Grab Bar Detail - Plan

1 1/2" = 1'-0"

Bid Documents

Number	Revision	Date
3	Addendum #3	12/05/13

CONSULTANTS:

Professional Seal

ARCHITECT/ENGINEERS:

H+K ARCHITECTS
5485 Reno Corporate Drive, Suite 100
Reno, Nevada 89511-2262
P 775+332+6640
F 775+332+6642
hkarchitects.com

Drawings Title: Details

Approved: Project Director

Project Title: Renovation of 3C/4th Floor to Single Patient Rooms

Location: 975 Kirman Avenue, Reno NV 89520

Date: August 22, 2013 | Checked: MMH | Drawn: EL

Project Number: 654-12-724

Building Number: Bldg. 12

Drawing Number: AI842

Office of Construction and Facilities Management

Department of Veterans Affairs

VA FORM 08-6231