Seeding mixture

Species	Rate (lb/acre)
Rye (grain)	120
Annual lespedeza	50

Seeding dates
Jan. 1 – May 1

Soil amendments
Follow recommendations of soil tests or apply 2,000 lb/acre ground agricultural limestone and 750 lb/acre 10–10–10 fertilizer.

Mulch
Apply 4,000 lb/acre straw. Anchor straw by tacking with asphalt, netting, or a mulch anchoring tool. A disk with blades set nearly straight can be used as a mulch anchoring tool.

Maintenance
Refertilize if growth is not fully adequate. Reseed, refertilize and mulch immediately following erosion or other damage.

Seeding mixture

Species	Rate (lb/acre)
German millet	40

Seeding dates
May 1 – Aug. 15

Soil amendments
Follow recommendations of soil tests or apply 2,000 lb/acre ground agricultural limestone and 750 lb/acre 10–10–10 fertilizer.

Mulch
Apply 4,000 lb/acre straw. Anchor straw by tacking with asphalt, netting, or a mulch anchoring tool. A disk with blades set nearly straight can be used as a mulch anchoring tool.

Maintenance
Refertilize if growth is not fully adequate. Reseed, refertilize and mulch immediately following erosion or other damage.

Seeding mixture

Species	Rate (lb/acre)
Rye (grain)	120

Seeding dates
Aug. 15 – Dec. 30

Soil amendments
Follow recommendations of soil tests or apply 2,000 lb/acre ground agricultural limestone and 1000 lb/acre 10–10–10 fertilizer.

Mulch
Apply 4,000 lb/acre straw. Anchor straw by tacking with asphalt, netting, or a mulch anchoring tool. A disk with blades set nearly straight can be used as a mulch anchoring tool.

Maintenance
Repair and refertilize damaged areas immediately. Topdress with 50 lb/acre nitrogen in March. If it is necessary to extend temporary cover beyond Jue 15, overseed with 50 lb/acre Kobe lespedeza in late February or early March.

TEMPORARY SEEDING SCHEDULE

Seeding mixture

Species[1]	Rate (lb/acre)
Pensacola Bahiagrass	50
Sericea lespedeza	30
Common Bermudagrass	10
German millet	10

Seeding notes
1. Where a neat appearance is desired, omit sericea.
2. Use common Bermudagrass only on isolated sites where it cannot become a pest. Bermudagrass may be replaced with 5 lb/acre centipedegrass.

Seeding dates
Apr. 1 - July 15

Soil amendments
Apply lime and fertilizer according to soil tests, or apply 3,000 lb/acre ground agricultural limestone and 500 lb/acre 10-10-10 fertilizer.

Mulch
Apply 4,000 lb/acre grain straw or equivalent cover of another suitable mulch. Anchor by tacking with asphalt, roving, or netting or by crimping with a mulch anchoring tool. A disk with blades set nearly straight can be used as a mulch anchoring tool.

Maintenance
Refertilize the following Apr. with 50 lb/acre nitrogen. Repeat as growth requires. May be mowed only once a year. Where a neat appearance is desired, omit sericea and mow as often as needed.

PERMANENT SEEDING SCHEDULE

STATE OF NORTH CAROLINA
DEPT. OF TRANSPORTATION
DIVISION OF HIGHWAYS
RALEIGH, N.C.
7-06

ENGLISH STANDARD DRAWING FOR
TEMPORARY SILT FENCE

SHEET 1 OF 1
1605.01

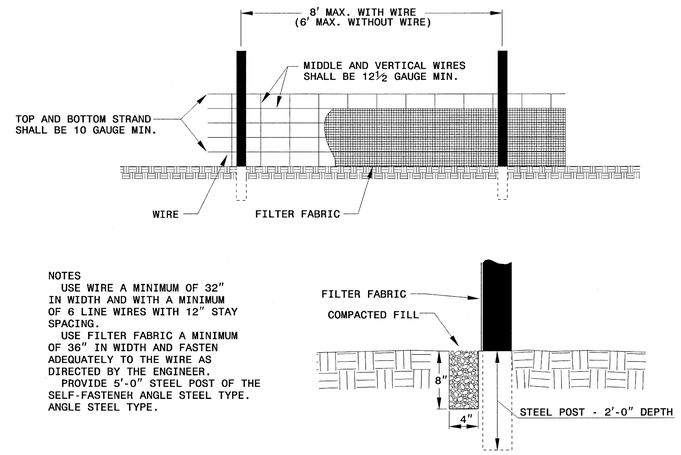

NOTES
USE WIRE A MINIMUM OF 32" IN WIDTH AND WITH A MINIMUM OF 6 LINE WIRES WITH 12" STAY SPACING.
USE FILTER FABRIC A MINIMUM OF 36" IN WIDTH AND FASTEN ADEQUATELY TO THE WIRE AS DIRECTED BY THE ENGINEER.
PROVIDE 5'-0" STEEL POST OF THE SELF-FASTENEH ANGLE STEEL TYPE. ANGLE STEEL TYPE.

STATE OF NORTH CAROLINA
DEPT. OF TRANSPORTATION
DIVISION OF HIGHWAYS
RALEIGH, N.C.
7-06

ENGLISH STANDARD DRAWING FOR
TEMPORARY SILT FENCE

SHEET 1 OF 1
1605.01

STATE OF NORTH CAROLINA
DEPT. OF TRANSPORTATION
DIVISION OF HIGHWAYS
RALEIGH, N.C.
7-06

ENGLISH STANDARD DRAWING FOR
GUIDE FOR RIP RAP AT PIPE OUTLETS

SHEET 1 OF 1
876.02

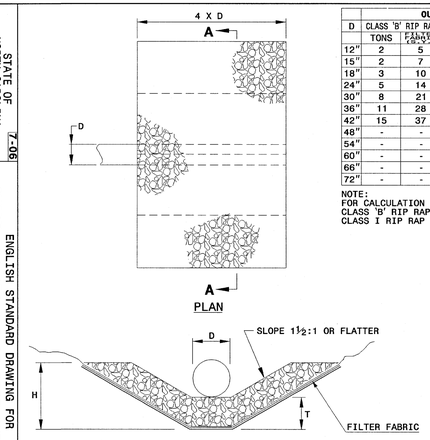

H= RIP RAP TO TOP OF PIPE (MAX. H = D + T)
T= 15" CLASS I RIP RAP, UNLESS OTHERWISE SHOWN ON PLANS
T= 12" CLASS 'B' RIP RAP, UNLESS OTHERWISE SHOWN ON PLANS

D	OUTLET W/DITCH					OUTLET W/O DITCH				
	CLASS 'B' RIP RAP		CLASS I RIP RAP			CLASS 'B' RIP RAP		CLASS I RIP RAP		
	TONS	FABRIC (SQ.YD.)	S.Y.	TONS	FABRIC (SQ.YD.)	TONS	FABRIC (SQ.YD.)	S.Y.	TONS	FABRIC (SQ.YD.)
12"	2	5	5	2	5	1	4	2	1	4
15"	2	7	7	3	7	1	5	3	2	6
18"	3	10	9	4	10	2	7	4	2	8
24"	5	14	15	7	15	3	11	7	4	12
30"	8	21	21	11	22	5	16	11	7	17
36"	11	28	29	15	30	7	22	16	10	23
42"	15	37	39	20	39	10	28	22	13	30
48"	-	-	49	26	50	-	-	28	17	38
54"	-	-	60	33	62	-	-	36	21	47
60"	-	-	73	40	75	-	-	44	26	56
66"	-	-	87	48	89	-	-	54	32	67
72"	-	-	102	57	104	-	-	64	38	78

NOTE:
FOR CALCULATION PURPOSES
CLASS 'B' RIP RAP = 100 LBS./FT^3
CLASS I RIP RAP = 105 LBS./FT^3

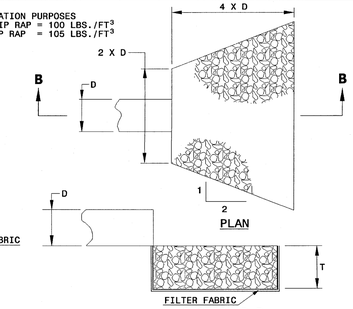

STATE OF NORTH CAROLINA
DEPT. OF TRANSPORTATION
DIVISION OF HIGHWAYS
RALEIGH, N.C.
7-06

ENGLISH STANDARD DRAWING FOR
GUIDE FOR RIP RAP AT PIPE OUTLETS

SHEET 1 OF 1
876.02

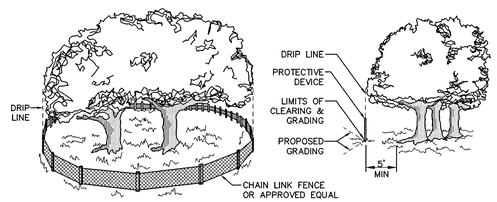

TREE PROTECTION (TP)

NCDENR STD & SPEC 6.05 NTS

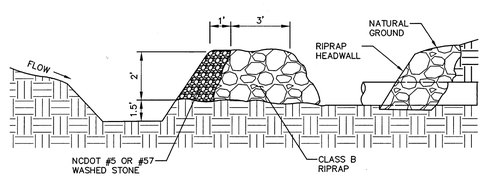

ROCK PIPE INLET PROTECTION

NCDENR STD & SPEC 6.55 NTS

SAFETY FENCE

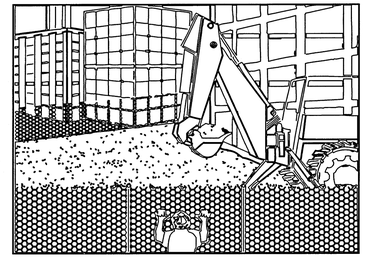

PERSPECTIVE VIEW

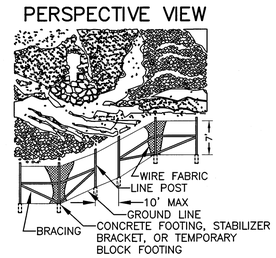

PERSPECTIVE VIEW
7' CHAIN LINK FENCE

SAFETY FENCE (SAF)

NTS

STATE OF NORTH CAROLINA
DEPT. OF TRANSPORTATION
DIVISION OF HIGHWAYS
RALEIGH, N.C.
7-06

ENGLISH STANDARD DRAWING FOR
ROCK INLET SEDIMENT TRAP TYPE 'C'

SHEET 1 OF 1
1632.03

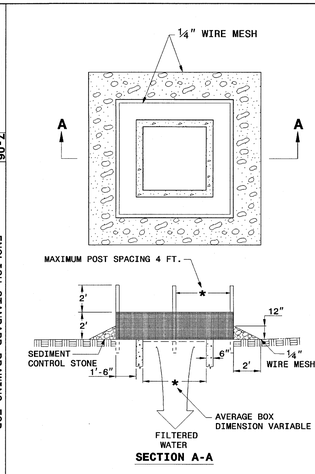

MULTI-DIRECTIONAL FLOW

NOTE
USE NO. 5 OR NO. 57 STONE FOR SEDIMENT CONTROL.
USE 24 GAUGE MINIMUM WIRE MESH HARDWARE CLOTH WITH ¼ INCH MESH OPENINGS.
PLACE TOP OF WIRE MESH A MINIMUM OF ONE FOOT BELOW THE SHOULDER OR ANY DIVERSION POINT.
INSTALL WIRE MESH UNDER SEDIMENT CONTROL STONE.
USE 5' STEEL POST, INSTALLED 1.5' DEEP MINIMUM, AND OF THE SELF-FASTENER ANGLE STEEL TYPE.
SPACE POST A MAXIMUM OF 4'.

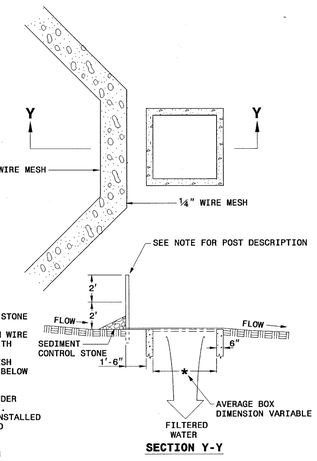

SINGLE-DIRECTIONAL FLOW

STATE OF NORTH CAROLINA
DEPT. OF TRANSPORTATION
DIVISION OF HIGHWAYS
RALEIGH, N.C.
7-06

ENGLISH STANDARD DRAWING FOR
ROCK INLET SEDIMENT TRAP TYPE 'C'

SHEET 1 OF 1
1632.03

Revisions	Date

NORTH CAROLINA PROFESSIONAL SEAL 035935 ENGINEER DOUGLAS M. WILLIS

MSA, P.C.
Environmental Sciences • Planning • Surveying
Civil & Environmental Engineering • Landscape Architecture
5033 Rouse Drive, Virginia Beach, VA 23462
757-490-9264 (Ofc) 757-490-0634 (Fax)
www.msaonline.com

McEntire Design ARCHITECTS
1001 WEST WASHINGTON STREET
SUFFOLK VIRGINIA 23434
phone 757-923-9800 fax 757-923-9830

FAYETTEVILLE
DEPARTMENT OF VETERANS AFFAIRS

Drawing Title: GENERAL NOTES & DETAILS

Project Title: STORMWATER STRUCTURE REPAIR

Date: 10/11/13

Project No.: 565-13-119

Building Number | Checked: GBH | Drawn: MSA

Location: VAMC, FAYETTEVILLE, NORTH CAROLINA

DRAWING NO. C7.0
DWG. 11 of 15

Department of Veterans Affairs

MSA #08126J

GENERAL NOTES: 2012 SPECIFICATIONS EFFECTIVE: 01-17-2012 REVISED: 07-30-2012

GRADING AND SURFACING:

THE GRADE LINES SHOWN DENOTE THE FINISHED ELEVATION OF THE PROPOSED SURFACING AT GRADE POINTS SHOWN ON THE TYPICAL SECTIONS. GRADE LINES MAY BE ADJUSTED AT THEIR BEGINNING AND ENDING AND AT STRUCTURES AS DIRECTED BY THE ENGINEER IN ORDER TO SECURE A PROPER TIE-IN.

GRADING AND SURFACING OR RESURFACING AND WIDENING:

THE GRADE LINES SHOWN DENOTE THE FINISHED ELEVATION OF THE PROPOSED SURFACING AT GRADE POINTS SHOWN ON THE TYPICAL SECTIONS. WHERE NO GRADE LINES ARE SHOWN, THE PROFILES SHOWN DENOTE THE TOP ELEVATION OF THE EXISTING PAVEMENT ALONG THE CENTER LINE OF SURVEY ON WHICH THE PROPOSED RESURFACING WILL BE PLACED. GRADE LINES MAY BE ADJUSTED BY THE ENGINEER IN ORDER TO SECURE A PROPER TIE-IN.

GRADING:

THE GRADE LINES SHOWN DENOTE THE FINISHED ELEVATION OF THE PROPOSED OR FUTURE SURFACING AT GRADE POINTS SHOWN ON THE TYPICAL SECTIONS. GRADE LINES MAY BE ADJUSTED AT THEIR BEGINNING AND ENDING AND AT STRUCTURES AS DIRECTED BY THE ENGINEER IN ORDER TO SECURE A PROPER TIE-IN.

CLEARING:

CLEARING ON THIS PROJECT SHALL BE PERFORMED TO THE LIMITS ESTABLISHED BY METHOD II.

SAFETY CLEARING:

THE CONTRACTOR'S ATTENTION IS DIRECTED TO THE AREAS IN THE PLANS DESIGNATED SAFETY CLEARING. THE LIMITS ARE AS SHOWN AND THE CLEARING AND GRUBBING IS CONSIDERED A PART OF THE LUMP SUM ITEM FOR "CLEARING AND GRUBBING".

SUPERELEVATION:

ALL CURVES ON THIS PROJECT SHALL BE SUPERELEVATED IN ACCORDANCE WITH STD. NO. 225.04.

SUPERELEVATION IS TO BE REVOLVED ABOUT THE GRADE POINTS SHOWN ON THE TYPICAL SECTIONS.

SHOULDER CONSTRUCTION:

ASPHALT, EARTH, AND CONCRETE SHOULDER CONSTRUCTION ON THE HIGH SIDE OF SUPERELEVATED CURVES SHALL BE IN ACCORDANCE WITH STD. NO. 560.01.

SIDE ROADS:

THE CONTRACTOR WILL BE REQUIRED TO DO ALL NECESSARY WORK TO PROVIDE SUITABLE CONNECTIONS WITH ALL ROADS, STREETS, AND DRIVES ENTERING THIS PROJECT. THIS WORK WILL BE PAID FOR AT THE CONTRACT UNIT PRICE FOR THE PARTICULAR ITEMS INVOLVED.

BERM DITCHES:

BERM DITCHES SHALL BE CONSTRUCTED IN ACCORDANCE WITH STD. NO. 240.01 AT LOCATIONS SHOWN ON THE PLANS OR AS DIRECTED BY THE ENGINEER.

SUBSURFACE DRAINS:

SUBSURFACE DRAINS SHALL BE CONSTRUCTED IN ACCORDANCE WITH STD. NO. 815.02 AT LOCATIONS DIRECTED BY THE ENGINEER.

DRIVEWAYS:

DRIVEWAYS SHALL BE CONSTRUCTED IN ACCORDANCE WITH STD. 848.03 AT LOCATIONS SHOWN ON PLANS OR AS DIRECTED BY THE ENGINEER.

STREET TURNOUT:

STREET RETURNS SHALL BE CONSTRUCTED IN ACCORDANCE WITH STD. NO. 848.04 USING THE RADII NOTED ON PLANS.

GUARDRAIL:

THE GUARDRAIL LOCATIONS SHOWN ON THE PLANS MAY BE ADJUSTED DURING CONSTRUCTION AS DIRECTED BY THE ENGINEER. THE CONTRACTOR SHOULD CONSULT WITH THE ENGINEER PRIOR TO ORDERING GUARDRAIL MATERIAL.

SUBSURFACE PLANS:

NO SUBSURFACE PLANS ARE AVAILABLE ON THIS PROJECT. THE CONTRACTOR SHOULD MAKE HIS OWN INVESTIGATION AS TO THE SUBSURFACE CONDITIONS.

UTILITIES:

ANY RELOCATION OF EXISTING UTILITIES WILL BE ACCOMPLISHED BY OTHERS, EXCEPT AS SHOWN ON THE PLANS.

CURB RAMPS:

CURB RAMPS ARE SHOWN ON THE PLANS AT APPROXIMATE LOCATIONS. CONSTRUCT ALL CURB RAMPS ACCORDANCE WITH STD 848.05 and/or 848.06.

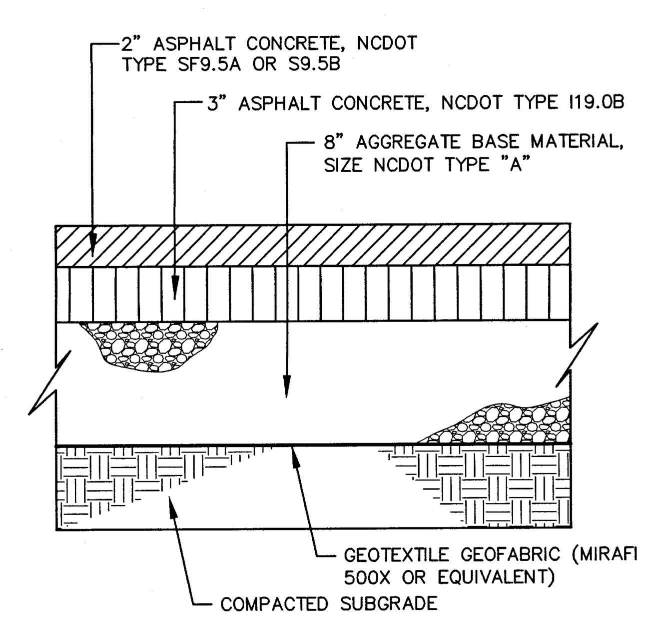

NOTES:

* AGGREGATE BASE MUST BE COMPACTED TO AT LEAST 100% OF THE STANDARD PROCTOR (ASTM D 698)

* SUBGRADE MUST BE STABLE AND APPROVED BY THE GEOTECHNICAL ENGINEER AND COMPACTED TO AT LEAST 95% OF ASTM D 698

PAVEMENT SECTION

NTS

STATE OF NORTH CAROLINA DEPT. OF TRANSPORTATION DIVISION OF HIGHWAYS RALEIGH, N.C.

7-06

ENGLISH STANDARD DRAWING FOR **PAVEMENT REPAIRS** FOR SUPERPAVE MIX TYPES

D	X	W
12"	1'-4"	7'-4"
15"	1'-7"	7'-7"
18"	1'-10"	7'-10"
24"	2'-6"	8'-6"
30"	3'-1"	9'-1"
36"	3'-8"	9'-8"
42"	4'-5"	10'-5"
48"	5'-0"	11'-0"

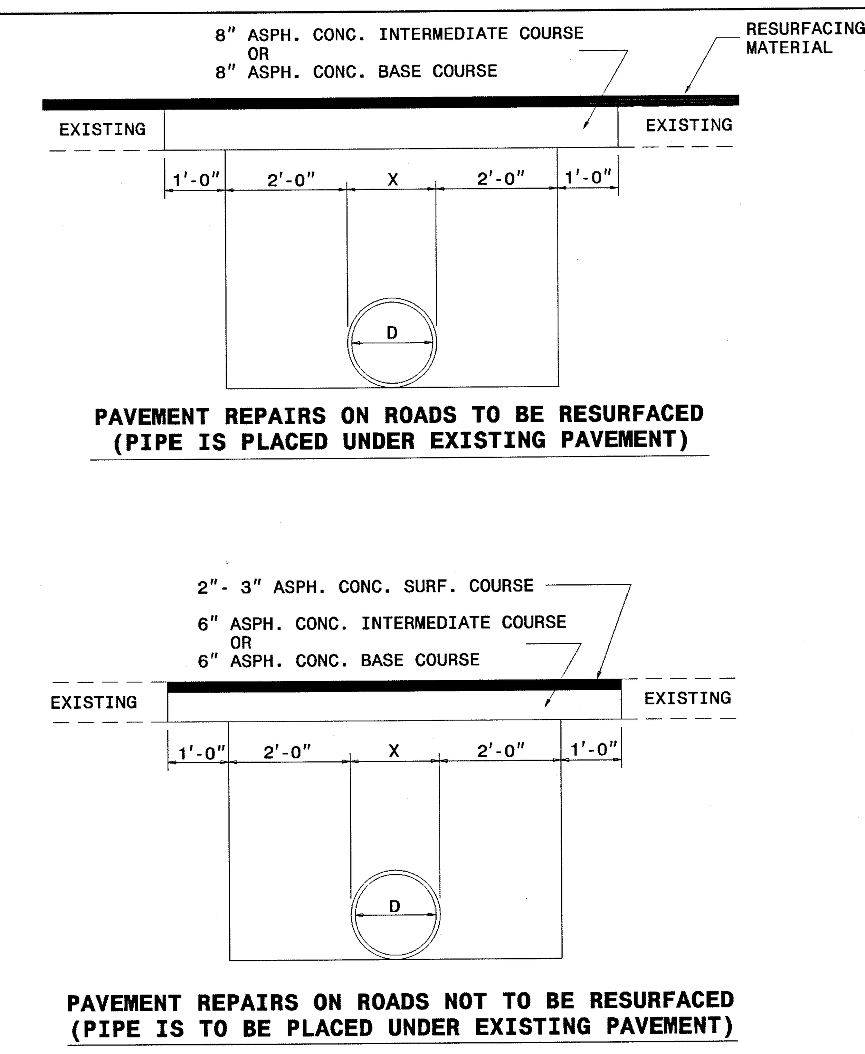

SHEET 1 OF 1

654.01

STATE OF NORTH CAROLINA DEPT. OF TRANSPORTATION DIVISION OF HIGHWAYS RALEIGH, N.C.

1-12

ENGLISH STANDARD DRAWING FOR **PRECAST CONCRETE ENDWALL** FOR SINGLE 12" THRU 72" PIPE - 90° SKEW

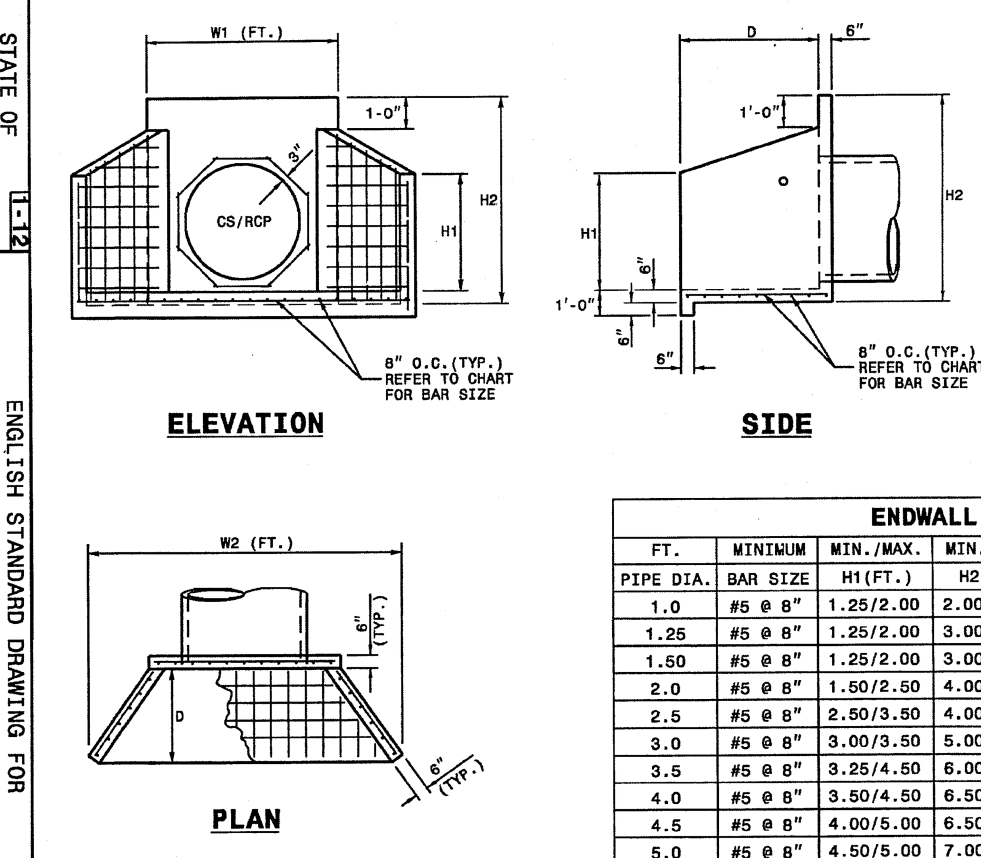

NOTES:

* THIS PRECAST ENDWALL MAY BE USED FOR THE FOLLOWING STANDARDS: 838.01, 838.11, 838.21, 838.27, 838.33, 838.39, 838.51, 838.57, 838.63 AND 838.69.
* INSTALL PRECAST ENDWALLS WITH WINGS AND PAY FOR IN ACCORDANCE WITH SPECIFICATION SECTION 838.
* USE 4000 PSI CONCRETE.
* PROVIDE ALL REINFORCING STEEL WHICH MEETS ASTM A615 FOR GRADE 60 AND WELDED WIRE FABRIC CONFORMING TO ASTM A185 WITH 2" MIN. CLEARANCE.
* PLACE LIFT HOLES OR PINS IN ACCORDANCE WITH OSHA STANDARD 1926.704.
* PIPE TO BE GROUTED INTO HEADWALL AT JOB SITE BY CONTRACTOR
* ALL ELEMENTS PRECAST TO MEET ASTM C913.
* WELDED WIRE FABRIC MAY BE SUBSTITUTED FOR REBAR AS LONG AS THE SAME AREA OF STEEL IS PROVIDED.
* CHAMFER ALL CORNERS 1" OR HAVE A RADIUS OF 1".

NOTE: THE MINIMUM BAR SIZE SHALL BE #5 BARS AT 8" CTS.THE CONTRACTOR WILL HAVE THE OPTION TO INCREASE THIS BAR SIZE AS NEEDED.

ENDWALL DIMENSIONS

FT. PIPE DIA.	MINIMUM BAR SIZE	MIN./MAX. H1(FT.)	MIN./MAX. H2(FT.)	MIN./MAX. D (FT.)	MIN./MAX. W1	MIN./MAX. W2
1.0	#5 @ 8"	1.25/2.00	2.00/3.75	1.25/1.75	3.00/3.75	5.50/6.00
1.25	#5 @ 8"	1.25/2.00	3.00/3.75	1.25/2.00	3.50/3.75	6.50/6.75
1.50	#5 @ 8"	1.25/2.00	3.00/4.25	1.50/2.50	3.50/3.75	6.50/6.75
2.0	#5 @ 8"	1.50/2.50	4.00/4.75	1.75/2.50	4.00/4.25	7.50/8.25
2.5	#5 @ 8"	2.50/3.50	4.00/6.00	2.00/3.00	4.50/5.50	10.00/11.50
3.0	#5 @ 8"	3.00/3.50	5.00/6.00	2.75/3.50	5.25/5.75	11.50/11.75
3.5	#5 @ 8"	3.25/4.50	6.00/6.75	3.25/3.50	6.00/6.75	12.00/13.25
4.0	#5 @ 8"	3.50/4.50	6.50/7.00	3.25/3.50	6.50/6.75	13.00/13.25
4.5	#5 @ 8"	4.00/5.00	6.50/8.50	3.25/4.00	7.00/9.25	13.50/15.75
5.0	#5 @ 8"	4.50/5.00	7.00/8.50	3.25/4.00	7.25/9.25	13.75/15.75
5.5	#5 @ 8"	4.50/5.00	7.50/8.50	3.25/4.00	7.25/9.25	14.00/15.75
6.0	#5 @ 8"	4.50/5.00	7.50/8.50	3.25/4.00	7.75/9.25	14.75/16.75

SHEET 1 OF 1

838.80

STATE OF NORTH CAROLINA DEPT. OF TRANSPORTATION DIVISION OF HIGHWAYS RALEIGH, N.C.

7-06

ENGLISH STANDARD DRAWING FOR **FRAME, GRATES, AND HOOD** FOR USE ON STANDARD CATCH BASIN

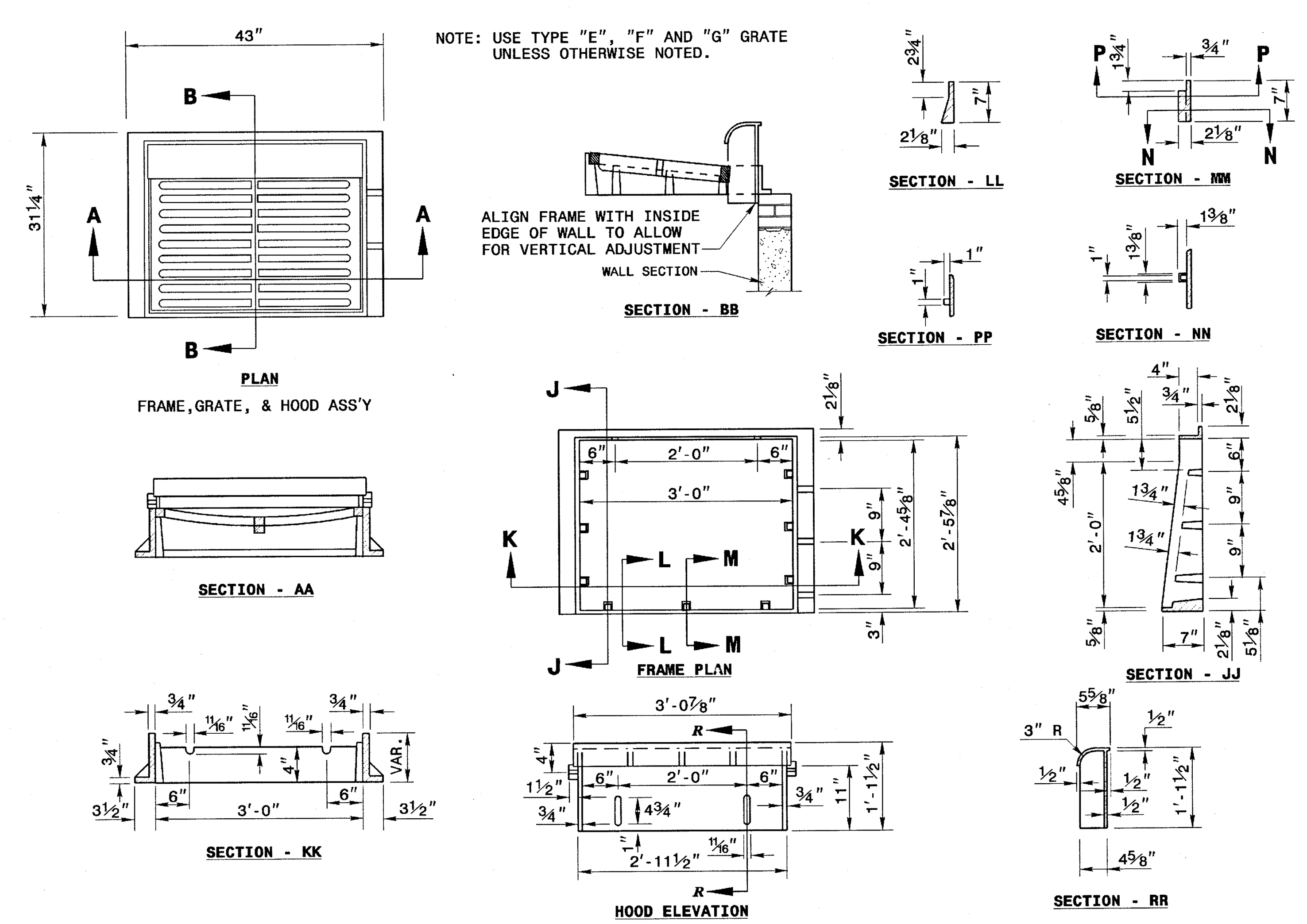

SHEET 1 OF 2

840.03

STATE OF NORTH CAROLINA DEPT. OF TRANSPORTATION DIVISION OF HIGHWAYS RALEIGH, N.C.

7-06

ENGLISH STANDARD DRAWING FOR **FRAME, GRATES, AND HOOD** FOR USE ON STANDARD CATCH BASIN

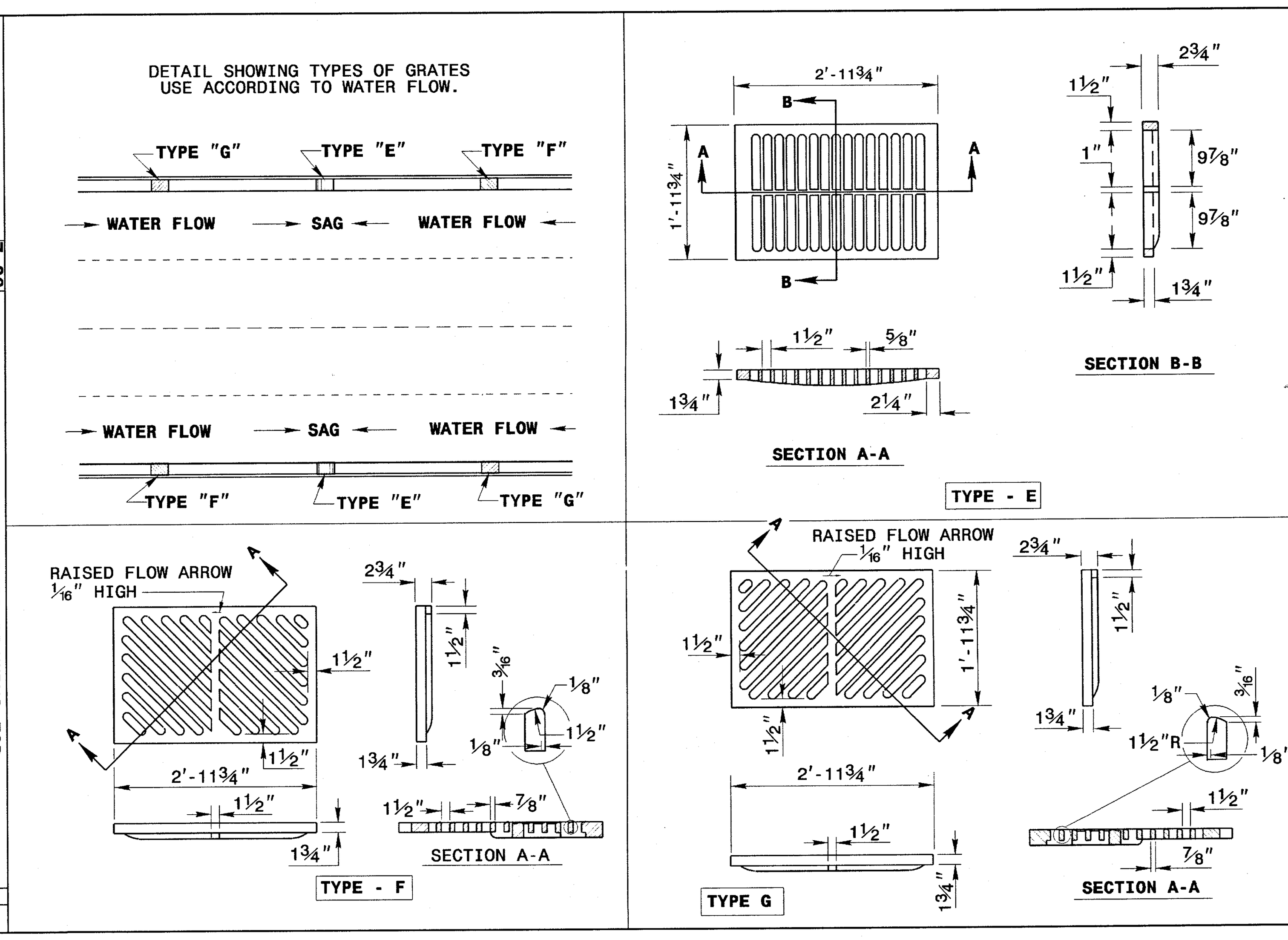

SHEET 2 OF 2

840.03

Revisions	Date

MSA, P.C.
Environmental Sciences • Planning • Surveying
Civil & Environmental Engineering • Landscape Architecture
5033 Rouse Drive, Virginia Beach, VA 23462
757-490-9264 (Ofc) 757-490-0634 (Fax)
www.msaonline.com

McEntire Design ARCHITECTS
1001 WEST WASHINGTON STREET
SUFFOLK VIRGINIA 23434
phone 757-923-9800 fax 757-923-9830

FAYETTEVILLE
DEPARTMENT OF VETERANS AFFAIRS

Drawing Title	GENERAL NOTES & DETAILS
Project Title	STORMWATER STRUCTURE REPAIR
Date	10/11/13
Project No.	565-13-119
Building Number	
Checked	GBH
Drawn	MSA
Location	VAMC, FAYETTEVILLE, NORTH CAROLINA
DRAWING NO.	C7.1
DWG.	12 of 15

Department of Veterans Affairs

MSA #08126J

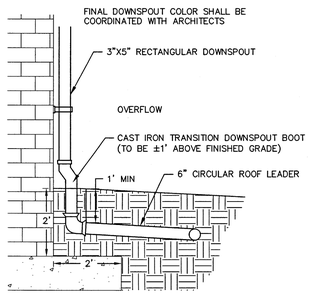

DOWNSPOUT CONNECTION

NTS

STATE OF NORTH CAROLINA DEPT. OF TRANSPORTATION DIVISION OF HIGHWAYS RALEIGH, N.C.

1-12

ENGLISH STANDARD DRAWING FOR **CONCRETE CATCH BASIN** 12" THRU 54" PIPE

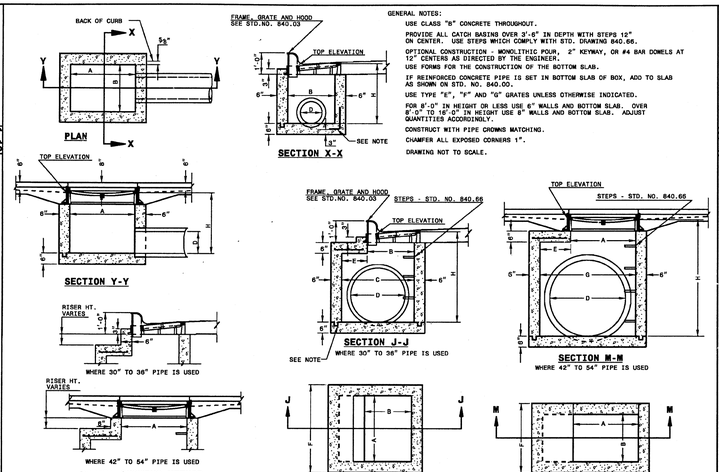

GENERAL NOTES:

USE CLASS "B" CONCRETE THROUGHOUT.

PROVIDE ALL CATCH BASINS OVER 3'-6" IN DEPTH WITH STEPS 12" ON CENTER. USE STEPS WHICH COMPLY WITH STD. DRAWING 840.66.

OPTIONAL CONSTRUCTION - MONOLITHIC POUR. 2" KEYWAY, OR #4 BAR DOWELS AT 12" CENTERS AS DIRECTED BY THE ENGINEER.

USE FORMS FOR THE CONSTRUCTION OF THE BOTTOM SLAB.

IF REINFORCED CONCRETE PIPE IS SET IN BOTTOM SLAB OF BOX, ADD TO SLAB AS SHOWN ON STD. NO. 840.00.

USE TYPE "E", "F" AND "G" GRATES UNLESS OTHERWISE INDICATED.

FOR 8'-0" IN HEIGHT OR LESS USE 6" WALLS AND BOTTOM SLAB. OVER 8'-0" TO 16'-0" IN HEIGHT USE 8" WALLS AND BOTTOM SLAB. ADJUST QUANTITIES ACCORDINGLY.

CONSTRUCT WITH PIPE CROWNS MATCHING.

CHAMFER ALL EXPOSED CORNERS 1".

DRAWING NOT TO SCALE.

SHEET 1 OF 2

840.02

STATE OF NORTH CAROLINA DEPT. OF TRANSPORTATION DIVISION OF HIGHWAYS RALEIGH, N.C.

1-12

ENGLISH STANDARD DRAWING FOR **CONCRETE CATCH BASIN** 12" THRU 54" PIPE

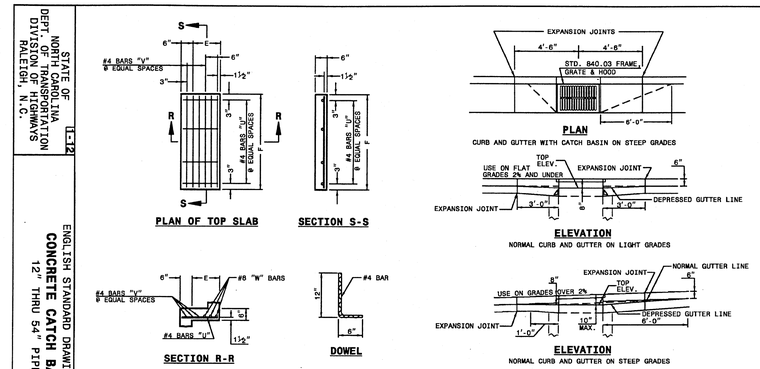

MINIMUM DIMENSIONS AND QUANTITIES FOR CONCRETE CATCH BASIN(BASED ON MIN. HEIGHT, H, WITH NO RISER) *

DIMENSIONS OF BOX AND PIPE						COVER DIMENSION		BARS-U		BARS-V		BARS-W		TOTAL LBS.	CU.YDS. CONC. IN BOX		DEDUCTIONS ONE PIPE	
PIPE D	SPAN A	WIDTH B	WIDTH C	SPAN Q	MIN. HEIGHT H	E	F	NO.	LENGTH	NO.	LENGTH	NO.	LENGTH		TOP SLAB	BOTTOM SLAB	TOP SLAB & BOTTOM SLAB	C.M.	R.C.
12"	3'-0"	2'-2"	--	--	2'-9"	--	--	--	--	--	--	--	--	--	0.235	0.772	0.015	0.026
15"	3'-0"	2'-2"			3'-0"										0.235	0.829	0.033	0.036
18"	3'-0"	2'-2"			3'-3"										0.235	0.887	0.033	0.049
24"	3'-0"	2'-2"			3'-9"										0.235	1.001	0.059	0.085
30"	3'-0"	2'-2"	3'-4"		4'-3"	1'-2"	4'-0"	4	1'-5"	2	3'-9"	3	3'-9"	39	0.123	0.321	1.433	0.092	0.127
36"	3'-0"	2'-2"	3'-10"		4'-9"	1'-8"	4'-0"	4	1'-11"	3	3'-9"	3	3'-9"	43	0.161	0.358	1.714	0.132	0.178
42"	3'-0"	2'-2"		4'-5"	5'-3"	1'-5"	3'-2"	4	1'-8"	2	2'-11"	3	2'-11"	32	0.112	0.318	1.738	0.180	0.243
48"	3'-0"	2'-2"		5'-0"	5'-9"	2'-0"	3'-2"	4	2'-3"	3	2'-11"	3	2'-11"	35	0.145	0.352	2.062	0.235	0.317
54"	3'-0"	2'-2"		5'-7"	6'-3"	2'-7"	3'-2"	4	2'-10"	5	2'-11"	3	2'-11"	41	0.180	0.386	2.387	0.297	0.401

* RISER HAS .228 CUBIC YARDS OF CONCRETE PER FOOT HEIGHT

SHEET 2 OF 2

840.02

STATE OF NORTH CAROLINA DEPT. OF TRANSPORTATION DIVISION OF HIGHWAYS RALEIGH, N.C.

1-12

ENGLISH STANDARD DRAWING FOR **DROP INLET** 12" THRU 30" PIPE

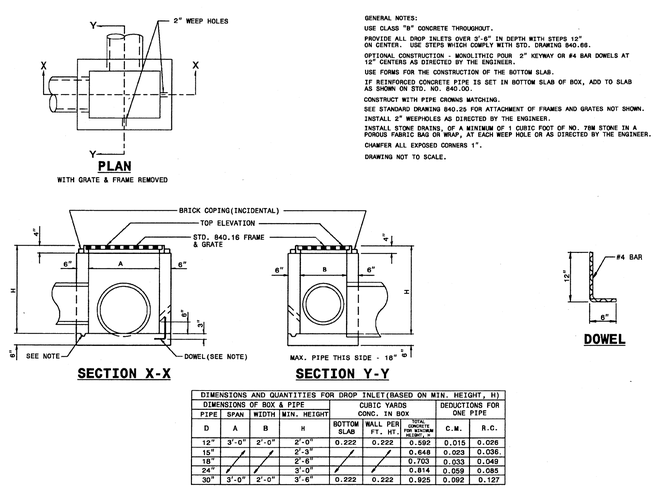

GENERAL NOTES:

USE CLASS "B" CONCRETE THROUGHOUT.

PROVIDE ALL DROP INLETS OVER 3'-6" IN DEPTH WITH STEPS 12" ON CENTER. USE STEPS WHICH COMPLY WITH STD. DRAWING 840.66.

OPTIONAL CONSTRUCTION - MONOLITHIC POUR. 2" KEYWAY OR #4 BAR DOWELS AT 12" CENTERS AS DIRECTED BY THE ENGINEER.

USE FORMS FOR THE CONSTRUCTION OF THE BOTTOM SLAB.

IF REINFORCED CONCRETE PIPE IS SET IN BOTTOM SLAB OF BOX, ADD TO SLAB AS SHOWN ON STD. NO. 840.00.

CONSTRUCT WITH PIPE CROWNS MATCHING.

SEE STANDARD DRAWING 840.25 FOR ATTACHMENT OF FRAMES AND GRATES NOT SHOWN.

INSTALL 2" WEEPHOLES AS DIRECTED BY THE ENGINEER.

INSTALL STONE DRAINS, OF A MINIMUM OF 1 CUBIC FOOT OF NO. 78M STONE IN A POROUS FABRIC BAG OR WRAP, AT EACH WEEP HOLE OR AS DIRECTED BY THE ENGINEER.

CHAMFER ALL EXPOSED CORNERS 1".

DRAWING NOT TO SCALE.

DIMENSIONS AND QUANTITIES FOR DROP INLET(BASED ON MIN. HEIGHT, H)

DIMENSIONS OF BOX & PIPE				CUBIC YARDS CONC. IN BOX			DEDUCTIONS FOR ONE PIPE	
PIPE D	SPAN A	WIDTH B	MIN. HEIGHT H	BOTTOM SLAB	WALL PER FT. HT.	TOTAL CONCRETE BOTTOM SLAB & 1 FT. WALL	C.M.	R.C.
12"	3'-0"	2'-0"	2'-0"	0.222	0.222	0.592	0.015	0.026
15"	/	/	2'-3"	/	/	0.648	0.033	0.036
18"	/	/	2'-6"			0.703	0.033	0.049
24"	/	/	3'-0"	/	/	0.814	0.059	0.085
30"	3'-0"	2'-0"	3'-6"	0.222	0.222	0.925	0.092	0.127

SHEET 1 OF 1

840.14

STATE OF NORTH CAROLINA DEPT. OF TRANSPORTATION DIVISION OF HIGHWAYS RALEIGH, N.C.

Z-06

ENGLISH STANDARD DRAWING FOR **DROP INLET FRAME AND GRATES** FOR USE WITH STD. DWG.S 840.14 AND 840.15

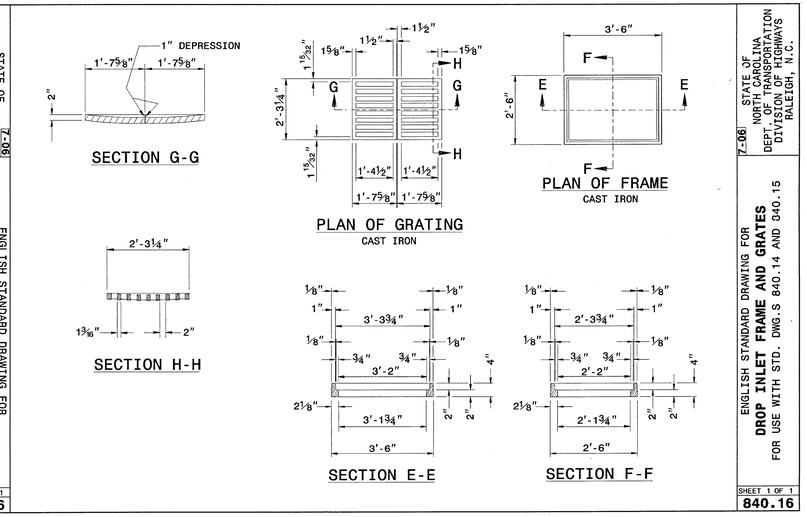

SHEET 1 OF 1

840.16

STATE OF NORTH CAROLINA DEPT. OF TRANSPORTATION DIVISION OF HIGHWAYS RALEIGH, N.C.

Z-06

ENGLISH STANDARD DRAWING FOR **DROP INLET FRAME AND GRATES** FOR USE WITH STD. DWG.S 840.14 AND 840.15

SHEET 1 OF 1

840.16

Revisions	Date

NORTH CAROLINA PROFESSIONAL SEAL 035535 ENGINEER DOUGLAS M. WILL 10/11/13

MSA, P.C.
Environmental Sciences • Planning • Surveying
Civil & Environmental Engineering • Landscape Architecture
5033 Rouse Drive, Virginia Beach, VA 23462
757-490-9264 (Ofc) 757-490-0634 (Fax)
www.msaonline.com

McEntire Design ARCHITECTS
1001 WEST WASHINGTON STREET
SUFFOLK VIRGINIA 23434
phone 757-923-9800 fax 757-923-9830

FAYETTEVILLE
DEPARTMENT OF VETERANS AFFAIRS

Drawing Title: DETAILS

Project Title: STORMWATER STRUCTURE REPAIR

Building Number | Checked: GBH | Drawn: MSA

Location: VAMC, FAYETTEVILLE, NORTH CAROLINA

Date: 10/11/13

Project No. 565-13-119

DRAWING NO. C7.2

DWG. 13 Of 15

Department of Veterans Affairs

MSA #08126J