DEPARTMENT OF VETERANS AFFAIRS

VA MEDICAL CENTER
TOMAH, WI

BID DOCUMENTS
CORRECT GAP DEFICIENCIES AT SPS
PROJECT NUMBER 676-13-106

LOCATION MAP

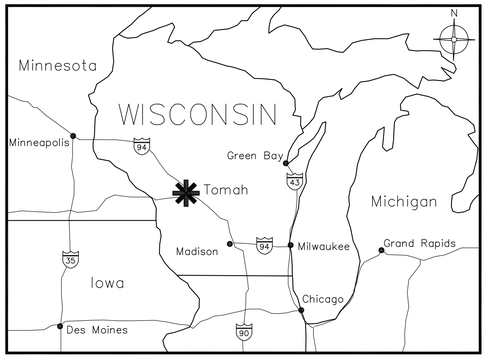

VICINITY MAP

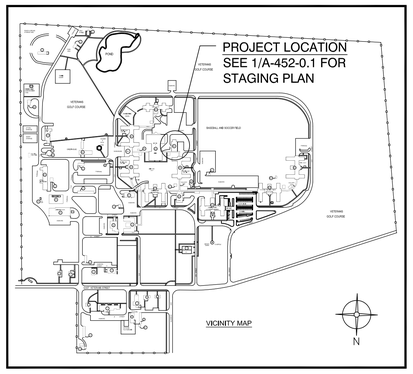

DRAWING INDEX

SHEET NO.	TITLE	SHEET NO.
COVER SHEET		
X-452-1.0	COVER SHEET	1 OF 27
ARCHITECTURAL DRAWINGS		
A-452-0.1	GENERAL NOTES, SYMBOLS, ABBREVIATIONS, AND STAGING PLAN	2 OF 27
A-452-2.1	FLOOR PLAN - DEMO	3 OF 27
A-452-2.2	REFLECTED CEILING PLAN - DEMO	4 OF 27
A-452-2.3	FLOOR PLAN	5 OF 27
A-452-2.4	REFLECTED CEILING PLAN	6 OF 27
A-452-3.1	ROOF PLAN	7 OF 27
A-452-5.1	SECTIONS & ELEVATIONS	8 OF 27
A-452-8.1	DETAILS	9 OF 27
A-452-8.2	DETAILS	10 OF 27
MECHANICAL DRAWINGS		
M-452-0.1	MECHANICAL GENERAL NOTES, SYMBOLS AND ABBREVIATIONS	11 OF 27
M-451-1.1	MECHANICAL DUCTWORK DEMOLITION	12 OF 27
M-452-1.2	MECHANICAL PIPING DEMOLITION	13 OF 27
M-452-2.1	MECHANICAL DUCTWORK NEW PLAN	14 OF 27
M-452-2.2	MECHANICAL PIPING NEW PLAN	15 OF 27
M-452-2.3	MECHANICAL ROOF DEMOLITION AND NEW	16 OF 27
M-452-3.1	MECHANICAL DUCTWORK DETAILS	17 OF 27
M-452-3.2	MECHANICAL STEAM PIPING DETAILS	18 OF 27
M-452-3.3	MECHANICAL WATER AND REFRIGERANT PIPING DETAILS	19 OF 27
M-452-3.4	MECHANICAL CONTROL DETAILS	20 OF 27
M-452-3.5	MECHANICAL CONTROL DETAILS	21 OF 27
M-452-4.1	MECHANICAL SCHEDULES	22 OF 27
M-452-4.2	MECHANICAL SCHEDULES	23 OF 27
M-452-4.3	MECHANICAL SCHEDULES	24 OF 27
ELECTRICAL DRAWINGS		
E-452-0.1	ELECTRICAL-NOTES, SYMBOLS, LEGENDS AND SCHEDULES	25 OF 27
E-452-1.0	PARTIAL FLOOR PLAN ELECTRICAL - DEMOLITION	26 OF 27
E-452-1.1	PARTIAL FLOOR PLAN ELECTRICAL - NEW	27 OF 27

ARCHITECTURE

ANDERSON ENGINEERING OF MINNESOTA, LLC
13605 1st AVENUE NORTH, SUITE 100
Plymouth, MN 55441
(763) 412-4000 TEL
(763) 412-4090 FAX
web: www.ae-mn.com

MECHANICAL, ELECTRICAL, PLUMBING ENGINEERS

MEP ASSOCIATES, LLC
2720 Arbor Court
Eau Claire, WI54701
(715) 832-5680 TEL.
(715) 832-5668 FAX
WEB: www.mepassociates.com

FULLY SPRINKLED

Revisions:	Date

CONSULTANTS:

MEP ASSOCIATES, LLC

ARCHITECT/ENGINEERS:

ANDERSON ENGINEERING
ENGINEERING • ARCHITECTURE • LAND SURVEYING
ENVIRONMENTAL SERVICES • LANDSCAPE ARCHITECTURE

Anderson Engineering of Minnesota, LLC
13605 1st Avenue North
Suite 100
Plymouth, MN 55441
763-412-4000 (o) 763-412-4090 (f)
www.ae-mn.com

Drawing Title: COVER SHEET	Project Title: CORRECT GAP DEFICIENCIES AT SPS		Project Number: 676-13-106
Approved Project Director			Building Number: 452
	Location: VA MEDICAL CENTER TOMAH WI		Drawing Number: X-452-1.0
	Date: 12-17-2013	Checked: PR	Drawn: WSH
			Dwg.1 of 27

Office of Construction and Facilities Management

Department of Veterans Affairs

VA FORM 08-6231 (MAR 2012)

ARCHITECTURAL ABBREVIATIONS

A	AMPERES	DN.	DOWN	INCL.	"INCLUDE, INCLUSIVE"	R.W.L.	RAIN WATER LEADER
A.B.	ANCHOR BOLT	DR	DOOR	INSUL.	INSULATION	R.D.O.	ROOF DRAIN OVERFLOW
A.F.F.	ABOVE FINISHED FLOOR	E.A.	EXPANSION ANCHOR	INT.	INTERIOR	R.O.	ROUGH OPENING
A.F.G.	ABOVE FINISHED GRADE	E.F.	EXHAUST FAN	J–BOX	JUNCTION BOX	R.O.W. or R/W	RIGHT OF WAY
A/C	AIR CONDITIONING	E.J.	EXPANSION JOINT	JCT	JUNCTION	REF	REFRIGERATOR
ABC	AGGREGATE BASE COURSE	E.N.	END NAILING	JST.	JOIST	REF.	REFERENCE
ABS	ACRYLONITRILE–BUTADIENE–STYRENE	E.W.	EACH WAY	JT.	JOINT	REINF.	REINFORCED
ABV.	ABOVE	EA.	EACH	K–D	KNOCK DOWN	REQ'D.	REQUIRED
ACB	ASBESTOS–CEMENT BOARD	EL	ELEVATION	KD	KILN DRIED	RET.	RETURN
ACOU.	ACOUSTIC	ELECT.	"ELECTRIC, ELECTRICAL"	KO	KNOCK OUT	REV.	REVISION
ACP	ACOUSTICAL CEILING PANEL	ELEV.	ELEVATOR	L.E.D.	LIGHT EMITTING DIODE	RM	ROOM
ADD.	ADDITION or ADDENDUM	EMC	ELECTRICAL METALLIC CONDUIT	L.FT.	LINEAR FEET	RMV.	REMOVE
AG	ABOVE GRADE	EMT	ELECTRICAL METALLIC TUBING	LAM	LAMINATE	S.C.	SOLID CORE
AHU	AIR HANDLER UNIT	ENT	ELECTRICAL NON–METALLIC TUBING	LAT.	LATERAL	S.D.	SMOKE DETECTOR
AL. or ALUM.	ALUMINUM	EQ.	EQUAL	LAV	LAVATORY	S.O.V.	SHUT OFF VALVE
ALT.	ALTERNATE	EQUIP.	EQUIPMENT	LD.	LEAD	S/L	SKYLIGHT
ANL	ANNEALED	EST.	ESTIMATE	LIN.	LINEAR	S/S	STAINLESS STEEL
ASPH.	ASPHALT	EVAP.	EVAPORATIVE COOLER	LINO.	LINOLEUM	SC	SELF CLOSING
AVG	AVERAGE	EWC	ELECTRIC DRINKING COOLER	LT.	LIGHT	SCHED.	SCHEDULE
AWG	AMERICAN WIRE GAUGE	EXC	EXCAVATE	LTG.	LIGHTING	SECT.	SECTION
∠	ANGLE	EXH.	EXHAUST	LVL	LAMINATED VENEER LUMBER	SES	SERVICE ENTRANCE SECTION
B.M.	BENCH MARK	EXIST. or E	EXISTING	M.B.	MACHINE BOLT	SHT	SHEET
B.N.	BOUNDARY NAILING	EXT.	EXTERIOR	M.H.	MANHOLE	SHT'G.	SHEATHING
B.O.	BOTTOM OF	F.A.	FIRE ALARM	M.I.	MALLEABLE IRON	SIM.	SIMILAR
B.O.F.	BOTTOM OF FOOTING	F.C.	FAN COIL	M.O.	MASONRY OPENING	SPA.	SPACE
B.U.	BUILT UP	F.C.O.	FLOOR CLEAN OUT	MAR.	MARBLE	SPECS	SPECIFICATIONS
B/C	BACK OF CURB	F.D.	FLOOR DRAIN	MAS.	MASONRY	SPKR.	SPEAKER
BD.	BOARD	F.E.	FIRE EXTINGUISHER	MAT'L	MATERIAL	SQ. FT.	SQUARE FEET
BLDG	BUILDING	F.N.	FIELD NAILING	MAX.	MAXIMUM	SQ. IN.	SQUARE INCHES
BLK.	BLOCK	F.O.	FACE OF	MECH.	MECHANICAL	SSM	SOLID SURFACE MATERIAL
BLKG.	BLOCKING	F.S.	FLOOR SINK	MED.	MEDIUM	STD.	STANDARD
BM.	BEAM	F/G	FIBERGLASS	MFG.	MANUFACTURING	STL.	STEEL
BR	BRASS	FAB.	FABRICATE	MFR.	MANUFACTURER	SUSP.	SUSPENDED
BRG.	BEARING	FACP	FIRE ALARM CONTROL PANEL	MIN.	MINIMUM	SW	SWITCH
BRZ	BRONZE	FDC	FIRE DEPARTMENT CONNECTION	MISC.	MISCELLANEOUS	SYM	SYMMETRICAL
BTW	BETWEEN	FDN.	FOUNDATION	MOD	MODULAR	SYS.	SYSTEM
C.A.P.	CONCRETE ASBESTOS PIPE	FHC	FIRE HOSE CABINET	MTL.	METAL	T & G	TONGUE AND GROOVE
C.D.	CONSTRUCTION DOCUMENTS	FIN.	FINISH	MUL	MULLION	T.B.	THROUGH BOLT
C.I.P.	CAST IN PLACE	FL	FLOOR	N.I.C.	NOT IN CONTRACT	T.M.B.	TELEPHONE MOUNTING BOARD
C.J.	CONTROL JOINT	FLG.	FLOORING	N.T.S.	NOT TO SCALE	T.O.	TOP OF
C.O.	CLEAN OUT	FLUOR.	FLUORESCENT	NCM	NON–CORROSIVE METAL	T.O.B.	TOP OF BEAM
C.T.	CERAMIC TILE	FP	FIRE PROOF	NFC	NOT FOR CONSTRUCTION	T.O.C.	TOP OF CURB
CAB	CABINET	FTG.	FOOTING	NLR.	NAILER	T.O.F.	TOP OF FOOTING
CAM.	CAMBER	FURN.	FURNISH	NO.	NUMBER	T.O.J.	TOP OF JOIST
CPT	CARPET	G.I.	GALVANIZED IRON	NOM.	NOMINAL	T.O.M.	TOP OF MASONRY
CCTV	CLOSED CIRCUIT TELEVISION	GA.	GAUGE	O.C.	ON CENTER	T.O.S.	TOP OF SLAB
CEM.	CEMENT	GALV.	GALVANIZED	O.D.	OUTSIDE DIAMETER	T.O.W.	TOP OF WALL
CER	CERAMIC	GAR.	GARAGE	O.H.	OVER HANG	T.S.	TUBE STEEL
CFM	CUBIC FEET PER MINUTE	GFCI	GROUND FAULT CIRCUIT INTERRUPTER	O.I.	ORNAMENTAL IRON	T.V.	TELEVISION OUTLET
CH or ⊏	CHANNEL	GFI	GROUND FAULT INTERRUPTER	O.R.	OUTSIDE RADIUS	TEL.	TELEPHONE
CKT. BKR.	CIRCUIT BREAKER	GL	GLASS	OAI	OUTSIDE AIR INTAKE	TZ.	TERRAZZO
CL or ℄	CENTERLINE	GLB	GLUE LAMINATED BEAM	OH	OVER HEAD	TH.	THRESHOLD
CLG.	CEILING	GM	GRADE MARK	OPNG.	OPENING	THD.	THREADED
CLKG.	CAULKING	GM	GATE VALVE	OPPO.	OPPOSITE	THK.	THICK
CLO.	CLOSET	GRC	GALVANIZED RIGID TUBING	P.C.	PRECAST CONCRETE	THRU	THROUGH
CLR.	CLEAR	GYP.	GYPSUM	P.L. or ℙ	PROPERTY LINE	TLT.	TOILET
CMU	CONCRETE MASONRY UNIT	GYP. BD.	GYPSUM BOARD	P.LAM.	PLASTIC LAMINATE	TRANS.	TRANSFORMER
CNTRD.	CENTERED	H.B.	HOSE BIBB	P.O.C.	POINT OF CONNECTION	TYP.	TYPICAL
COL.	COLUMN	H.C.	HOLLOW CORE	PERF.	PERFORATED	UNF.	UNFINISHED
COMB.	COMBINATION	H.M.	HOLLOW METAL	PERP. or ⊥	PERPENDICULAR	U.N.O.	UNLESS NOTED OTHERWISE
CONC.	CONCRETE	H/C	HANDICAPPED	PH or ø	PHASE	UR	URINAL
CONST.	CONSTRUCTION	HDBD.	HARDBOARD	PL.	PLASTER	V.B.	VAPOR BARRIER
CONT.	CONTINUOUS	HDW	HARDWARE	PL. or ℙ	PLATE	V.I.F.	VERIFY IN FIELD
CONTR.	CONTRACTOR	HGT.	HEIGHT	PLAS.	PLASTIC	VA	VOLT AMPERE
CU	COPPER	HOR.	HORIZONTAL	PLUMB.	PLUMBING	VCT	VINYL COMPOSITION TILE
d	PENNY	HTR	HEATER	PLYWD.	PLYWOOD	VERT.	VERTICAL
D.F.	DRINKING FOUNTAIN	HVAC	"HEATING, VENTILATING & AIR CONDITIONING"	PNT	PAINT	W/C	WATER CLOSET
D.G.	DECOMPOSED GRANITE	HW	HOT WATER	PREFAB.	PREFABRICATED	WDW	WINDOW
D.S.	DOWN SPOUT	HYD.	HYDRAULIC	PSF	POUNDS PER SQUARE FOOT	WCT	WAINSCOT
D/W	DISHWASHER	I.C.	INTERCOM OUTLET	PSI	POUNDS PER SQUARE INCH	WP	WEATHER PROOF
DBL.	DOUBLE	I.D.	INSIDE DIAMETER	PTN.	PARTITION	WT.	WEIGHT
DEMO	DEMOLITION	I.F.	INSIDE FACE	PVC	POLYVINYLCLORIDE	W/	WITH
DIA. or ø	DIAMETER	ID	IDENTIFICATION	PWR.	POWER	W/O	WITHOUT
DIAG.	DIAGONAL	IG	ISOLATED GROUND	Q.T.	QUARRY TILE	WD.	WOOD
DIM.	DIMENSION	IMC	INTERMEDIATE METALLIC CONDUIT	QTY.	QUANTITY	W.I.	WROUGHT IRON
DL	DEAD LOAD	IMPG	IMPREGNATED	R	RADIUS	YD.	YARD

MATERIAL INDICATIONS

- CONCRETE
- WOOD
- BASE COURSE
- MASONRY (SECTION)
- SAND/MORTAR
- MORTAR MESH
- RIGID INSULATION
- STEEL/ALUMINUM
- CMU
- EARTH

GENERAL NOTES

1. DRAWINGS MAY NOT ACCURATELY REFLECT EXISTING BUILDING CONDITIONS. IT IS THE RESPONSIBILITY OF THE GENERAL CONTRACTOR TO VERIFY ALL LAYOUTS, DIMENSIONS, AND OTHER RELATED INFORMATION.
2. COLORS AND MANUFACTURER OF MATERIALS AS DIRECTED BY VA STAFF CERTIFIED INTERIOR DESIGNER (CID) AS DIRECTED BY RESIDENT ENGINEER (RE).
3. BUILDING IN ACCORDANCE WITH CURRENT STANDARD VA SPECIFICATIONS. IF EXCEPTIONS FROM VA SPECIFICATIONS ARE REQUIRED THE GENERAL CONTRACTOR MUST RECEIVE WRITTEN AUTHORIZATION FROM RESIDENT ENGINEER (RE).
4. EACH TRADE IS RESPONSIBLE FOR CLEANLY CUTTING ANY FLOOR, WALL, CEILING OR ROOF PENETRATIONS TO AVOID ANY ROUGH CUT OPENINGS OR UNNECESSARY GAPS. PENETRATIONS VISIBLE IN FINISHED SPACE SHOULD BE FINISHED WITH COMPATIBLE CAULK/SEALANT IN COLOR TO MATCH ADJACENT MATERIAL.
5. CONFIRM WITH VA HAZARDOUS MATERIALS SURVEY FOR PRESENCE OF ANY HAZARDOUS MATERIALS PRIOR TO START OF DEMOLITION. COORDINATE WITH VA FOR ANY IDENTIFICATION/REMEDIATION FOR ALL CORE DRILLING OR MODIFICATION OF ANY EXISTING MEP SYSTEMS.
6. REPAIR ALL DISTURBED AREAS TO ORIGINAL CONDITIONS AS APPROVED BY VA. COMPACT SOIL TO SURROUNDING EXISTING CONDITIONS. SEED TO MATCH EXISTING SEED MIXTURE CURRENTLY UTILIZED BY VA MAINTENANCE OPERATIONS.

ARCHITECTURAL SYMBOLS

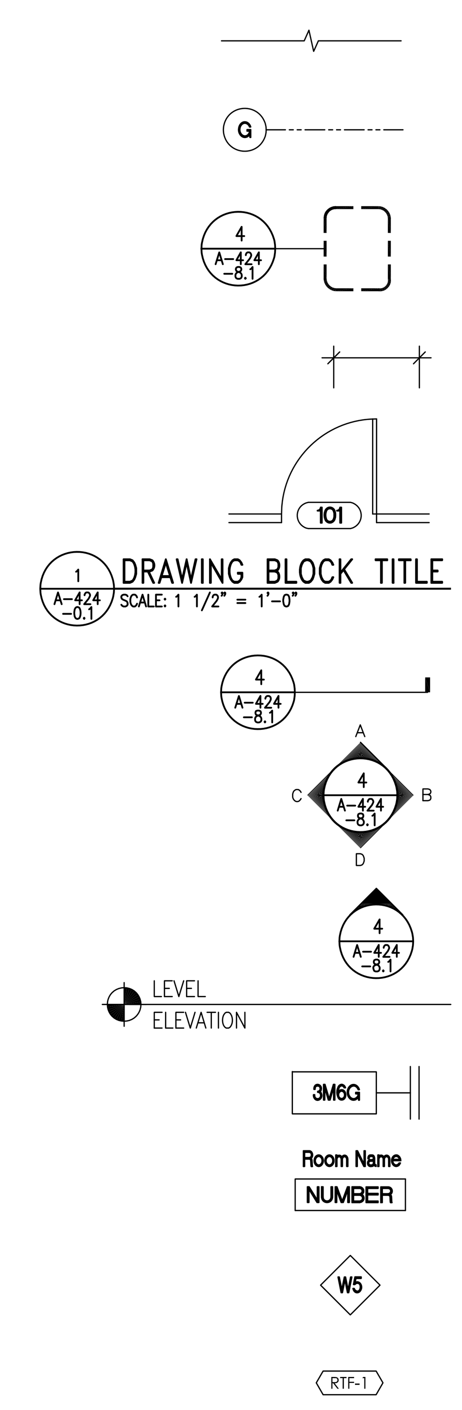

- BREAK, STRAIGHT (SEE SECTION INDICATORS, BUILDING, WITH BREAK STANDARDS)
- COLUMN GRIDLINE INDICATOR
- DETAIL INDICATOR
- DIMENSION LINE
- DOOR OPENING/BORROWED LIGHT IDENTIFIER
- DRAWING BLOCK TITLE, TYPICAL
- DETAIL SECTION INDICATOR
- ELEVATION INDICATOR, INTERIOR, MULTIPLE VIEW
- ELEVATION INDICATOR, INTERIOR, SINGLE VIEW
- FLOOR / SLAB ELEVATION INDICATOR
- PARTITION TYPE INDICATOR
- ROOM IDENTIFIER
- WINDOW TYPE INDICATOR
- FINISH TAG

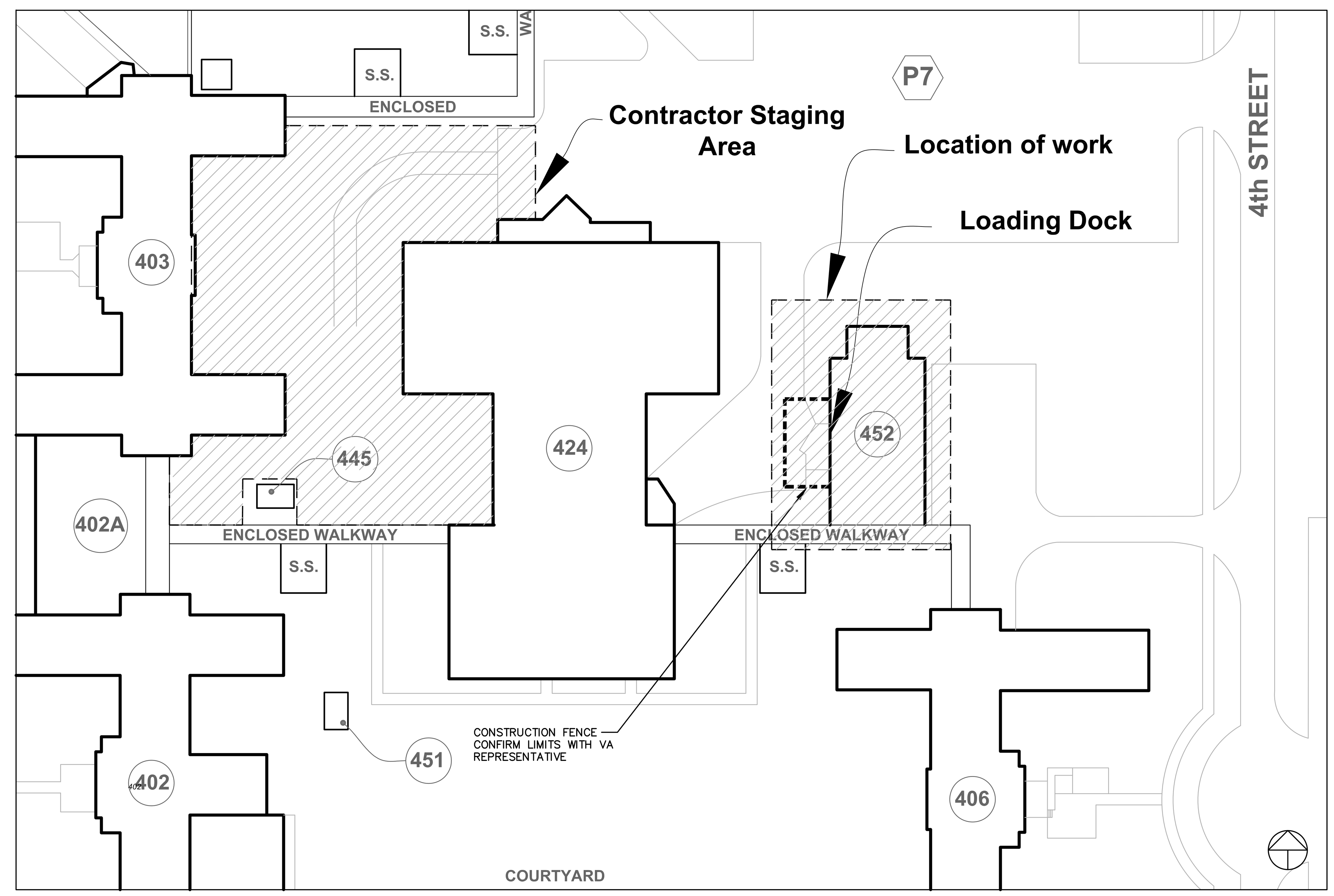

1 / A–452–0.1 STAGING PLAN
SCALE: 1: 500

FULLY SPRINKLED

Revisions:	Date

CONSULTANTS:
MEP ASSOCIATES, LLC

ARCHITECT/ENGINEERS:
ANDERSON ENGINEERING
ENGINEERING • ARCHITECTURE • LAND SURVEYING
ENVIRONMENTAL SERVICES • LANDSCAPE ARCHITECTURE

Anderson Engineering of Minnesota, LLC
13605 1st Avenue North
Suite 100
Plymouth, MN 55441
763-412-4000 (o) 763-412-4090 (f)
www.ae-mn.com

Drawing Title	GENERAL NOTES, SYMBOLS, ABBREVIATIONS, AND STAGING PLAN
Approved: Project Director	
Project Title	CORRECT GAP DEFICIENCIES AT SPS
Location	VA MEDICAL CENTER TOMAH WI
Date	12-17-2013
Checked	PR
Drawn	WSH
Project Number	676-13-106
Building Number	452
Drawing Number	A-452-0.1
	Dwg. 2 of 27

Office of Construction and Facilities Management
Department of Veterans Affairs

PRINTED: 8/12/2013 FILE: Y:\13400\13433 VA TOMAH - CORRECT GAP DEFICIENCIES AT SPS\Dwg-C3d\Arch\13433-A-452-0.1_General Notes.dwg

VA FORM 08-6231 (MAR 2012)

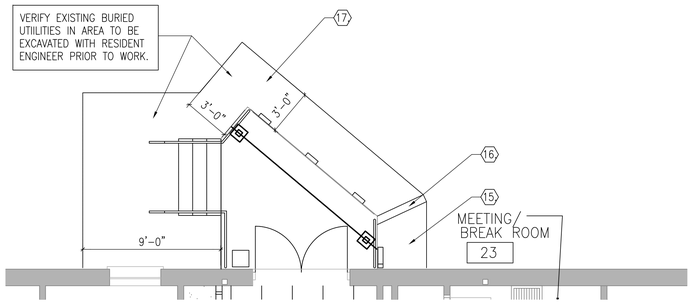

2 A-452 -2.1 PARTIAL SITE PLAN – DEMO
SCALE: 1/4" = 1'-0"

KEYED DEMOLITION NOTES:

1. FOR ABOVE CEILING ELECTRICAL, REMOVE AND DISCARD ALL ABANDONED CONDUIT, HANGERS, AND RELATED ACCESSORIES BACK TO ITS SOURCE, TYP.
2. REMOVE AND SALVAGE FOR REUSE ACT SYSTEM, LIGHTS, AND CEILING MOUNTED EQUIPMENT, TYP.
3. REMOVE EXISTING HOLLOW METAL DOORS. EXISTING DOOR FRAME TO REMAIN.
4. REMOVE AND SALVAGE FOR REUSE EXISTING STEEL BASE PLATE, POSTS, AND BEAM FOR NEW LOCATION ON DOCK PLATFORM. PATCH CONCRETE AS REQUIRED TO CREATE A SMOOTH LEVEL SURFACE. SHORE STRUCTURE AS NEEDED. SEE SHORING NOTES ABOVE.
5. GENERAL CONTRACTOR TO PROTECT AND REPAIR ANY DAMAGES TO THE SITE, INCLUDING BUT NOT LIMITED TO PAVEMENT AND CURB ADJACENT TO THE BUILDING, EXTERIOR WALLS AND STOREFRONT, EXISTING ELECTRICAL FIXTURES, LANDSCAPE FEATURES, INCLUDING ANY VEGETATION OR OTHER UTILITIES, ETC, AS A RESULT OF CONSTRUCTION ACTIVITY DURING THE DURATION OF THE PROJECT.
6. AT EXISTING WALLS, PATCH, REPAIR, AND REUSE GYPSUM BOARD WHERE POSSIBLE TO ACHIEVE LIKE NEW CONDITION.
7. REMOVE CLOSET DOORS, INTERIOR STUD PARTITIONS & ALL RELATED ACCESSORIES, TYP.
8. REMOVE ALL EXISTING WALL BASES & RELATED ATTACHMENTS.
9. REMOVE ALL EXISTING FLOORING FINISHES TO EXISTING SLAB AND PREP FOR NEW FLOORING.
10. CONTRACTOR SHALL PROVIDE TEMPORARY BARRIERS AS NEEDED TO SECURE THE EXISTING BUILDING DURING THE DEMOLITION AND CONSTRUCTION PROCESS.
11. CONTRACTOR SHALL PATCH, REPAIR, REFINISH AND/OR REPLACE WHEREVER REQUIRED TO PROVIDE A CONSISTENT FINISH IN AREAS OF CONSTRUCTION THROUGHOUT THE EXISTING BUILDING.
12. EXISTING LOADING DOCK BUMPERS TO BE REMOVED.
13. DEMOLISH EXISTING CONCRETE STAIRS, HANDRAIL AND GUARDRAIL – PATCH AS REQUIRED.
14. EXISTING CONCRETE DOCK PLATFORM TO REMAIN.
15. EXISTING LOOSE STONE TO BE REMOVED AND REPLACED AFTER INSULATION AND METAL PANEL WORK IS COMPLETED.
16. EXISTING CONCRETE CURB TO BE REMOVED FOR ACCESS TO LOADING DOCK FOUNDATION – PATCH TO MATCH EXISTING.
17. EXISTING ASPHALT PAVING TO BE REMOVED FOR ACCESS TO LOADING DOCK FOUNDATION – PATCH TO MATCH EXISTING.
18. TRENCH SLAB FOR FLOOR DRAIN RELOCATION – SEE MECHANICAL DRAWINGS FOR DETAILS

DEMOLITION FLOOR PLAN LEGEND:

- EXISTING WALLS, DOORS, FRAMING, ETC. TO BE DEMOLISHED (TYP)
- EXISTING WALLS TO REMAIN
- N.I.C.

GENERAL DEMOLITION NOTES:

01–PROTECTION

01 ALL RULES AND REGULATIONS GOVERNING THE RESPECTIVE UTILITIES SHALL BE OBSERVED IN EXECUTING ALL DEMOLITION WORK. ALL WORK SHALL BE EXECUTED IN SUCH A MANNER AS TO PREVENT ANY DAMAGE TO THE EXISTING BUILDING, SERVICE UTILITY LINES AND STRUCTURES.

02 THE CONTRACTOR SHALL ASSUME FULL RESPONSIBILITY FOR DAMAGES TO THE EXISTING BUILDING, AS WELL AS ADJOINING PRIVATE SPACES AND PROPERTY CAUSED BY HIS SUBCONTRACTORS' EQUIPMENT AND PERSONNEL.

03 PERFORM THE WORK IN SUCH A MANNER AS TO CAUSE NO INTERFERENCE WITH ACCESS BY THIS SUBCONTRACTOR OR OTHER CONTRACTORS TO ALL PORTIONS OF THE BUILDING AS NECESSARY FOR THE NORMAL CONDUCT OF THEIR WORK.

04 THE CONTRACTOR SHALL NOT COMMENCE DEMOLITION WORK UNTIL ITEMS SCHEDULED TO REMAIN HAVE BEEN ADEQUATELY PROTECTED OR REMOVED. TAKE ALL POSSIBLE PRECAUTIONS TO AVOID DAMAGING THOSE ITEMS WHICH HAVE BEEN SPECIFIED TO BE STORED FOR REUSE.

05 CONTRACTOR TO SECURE ALL OPENINGS AND BUILDING AT END OF EACH DAY.

02 – CLEAN UP

01 PROMPTLY REMOVE ANY DEMOLITION DEBRIS OR SIMILAR MATERIAL, KEEPING THE AREA CLEAN AT ALL TIMES.

02 CONTRACTOR TO COORDINATE WITH THE VA ON LOCATION OF DUMPSTER DURING CONSTRUCTION AND SCHEDULING OF REMOVAL.

03–PREPARTION

01 NOTIFY ALL CORPORATIONS, COMPANIES, INDIVIDUALS OR LOCAL AUTHORITIES OWNING OR HAVING JURISDICTION OVER UTILITIES RUNNING TO, THROUGH OR ACROSS AREAS TO BE DISTURBED BY DEMOLITION OPERATIONS.

02 HAVE ALL UTILITY SERVICES NOT OTHERWISE DESIGNATED TO BE DISCONNECTED BY THE CONTRACTOR DISCONNECTED AT SERVICE MAINS BY THE GOVERNING UTILITY INVOLVED, UNLESS OTHERWISE SHOWN ON THE DRAWINGS OR DIRECTED BY THE ARCHITECT.

04–SHORING

01 THE CONTRACTOR SHALL SHORE, BRACE, OR OTHERWISE SUPPORT THE STRUCTURE AS REQUIRED TO MAINTAIN STRUCTURAL INTEGRITY AT ALL TIMES. SHORING DESIGN SHALL BE PROVIDED BY THE G. C.

05–DEMOLITION

01 DEMOLISH DESIGNATED EXISTING FEATURES AS NOTED TO PREPARE THE BUILDING FOR ALL OTHER WORK AS SPECIFIED OR AS SHOWN ON THE DRAWINGS AND AS ORDERED BY THE ARCHITECT.

02 REMOVE AND SALVAGE MATERIAL REQUIRED FOR LATER REUSE AS SHOWN ON THE DRAWINGS AND AS DIRECTED BY THE ARCHITECT.

05 ANY SALVAGE WORK PERFORMED BY THE CONTRACTOR SHALL NOT DELAY OR OBSTRUCT ANY OTHER DEMOLITION AND CONSTRUCTION WORK ON THE JOBSITE.

04 REMOVE AND DISPOSE OF ALL UNSUITABLE MATERIAL OFF SITE. THE VA SHALL HAVE RIGHT OF FIRST REFUSAL FOR ALL MATERIALS. REMOVE ANY STORED MATERIAL DEEMED SURPLUS BY THE ARCHITECT AT NO ADDITIONAL COST TO THE VA.

05 CONTRACTOR SHALL PROVIDE A LEVEL FLOOR, READY TO RECEIVE HIGH QUALITY FINISHES AT LOCATIONS WHERE NEW FLOORING FINISHES ARE DESIGNATED TO BE INSTALLED.

06–OWNER

01 DEMOLISHED MATERIAL
A ALL DEMOLISHED MATERIAL DECLARED UNSUITABLE BY THE ARCHITECT SHALL BECOME THE PROPERTY OF THE CONTRACTOR AND SHALL BE LEGALLY DISPOSED OF, OFF THE PREMISES, UNLESS OTHERWISE INDICATED OR SPECIFIED.
B KEEP ALL EXITS, PUBLIC WAYS AND EGRESS PASSAGEWAYS CLEAR OF ALL DEBRIS AT ALL TIMES.

02 LEAVE THE PREMISES IN A SAFE, CLEAN AND RELATIVELY ORDERLY CONDITION UPON COMPLETION OF WORK.

03 PROVIDE DUST CONTROL MEASURES AS NECESSARY TO PREVENT SPREADING DUST AND TO SUIT THE CONDITIONS OF THE PROJECT.

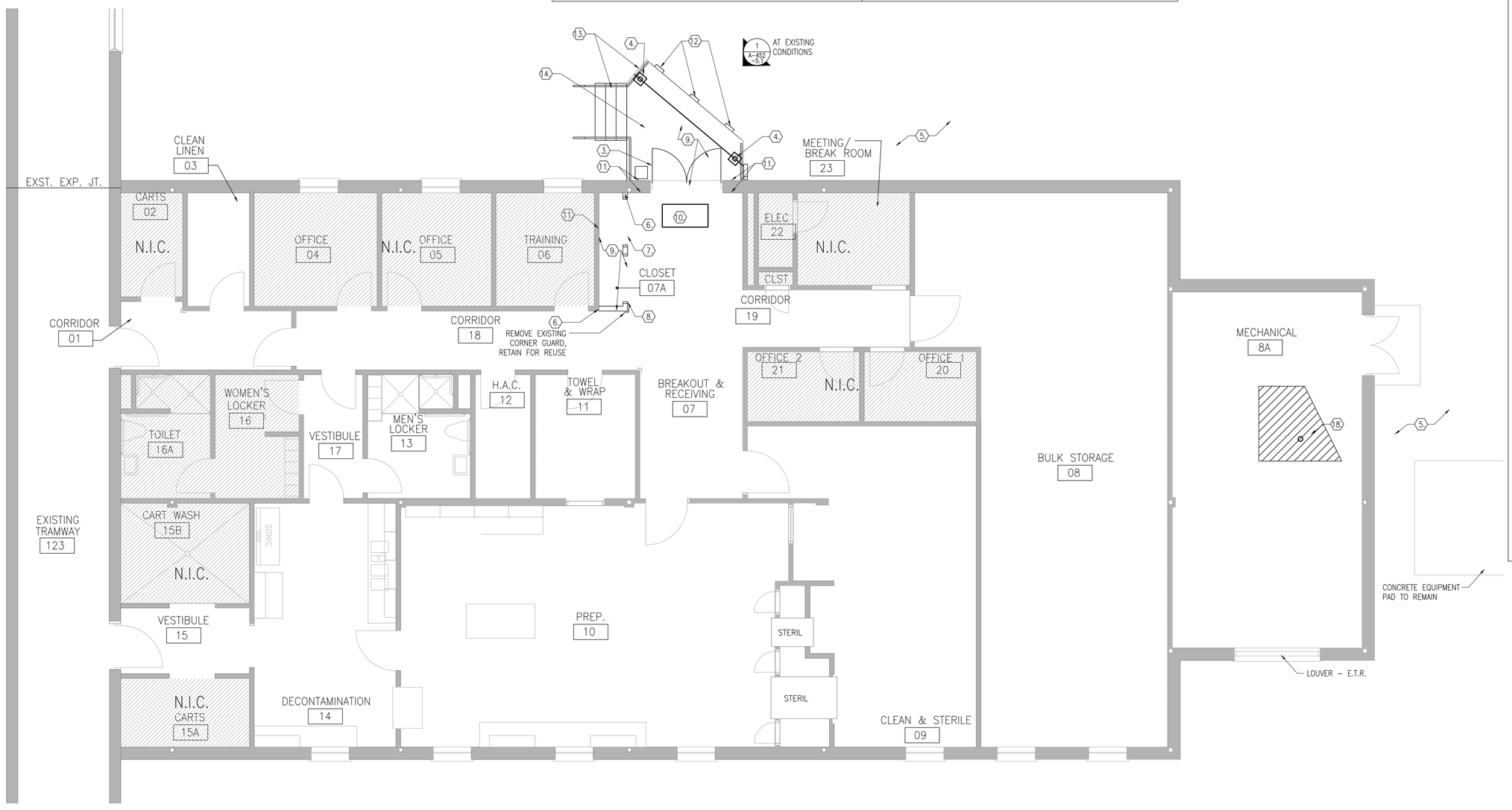

1 A-452 -2.1 FLOOR PLAN – DEMO
SCALE: 1/4" = 1'-0"

KEYPLAN

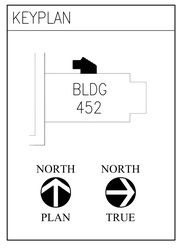

FULLY SPRINKLED

Revisions:	Date

CONSULTANTS:

MEP ASSOCIATES, LLC

ARCHITECT/ENGINEERS:

ANDERSON ENGINEERING
ENGINEERING • ARCHITECTURE • LAND SURVEYING
ENVIRONMENTAL SERVICES • LANDSCAPE ARCHITECTURE

Anderson Engineering of Minnesota, LLC
13605 1st Avenue North
Suite 100
Plymouth, MN 55441
763-412-4000 (o) 763-412-4090 (f)
www.ae-mn.com

Drawing Title: FLOOR PLAN - DEMO

Approved Project Director:

Project Title: CORRECT GAP DEFICIENCIES AT SPS

Location: VA MEDICAL CENTER TOMAH WI

Date: 12-17-2013 | Checked: PR | Drawn: WSH

Project Number: 676-13-106

Building Number: 452

Drawing Number: A-452-2.1

Dwg. 3 of 27

Office of Construction and Facilities Management

Department of Veterans Affairs

VA FORM 08-6231 (MAR 2012)

KEYED DEMOLITION NOTES:

1. FOR ABOVE CEILING ELECTRICAL, REMOVE AND DISCARD ALL ABANDONED CONDUIT, HANGERS, AND RELATED ACCESSORIES BACK TO ITS SOURCE, TYP.
2. REMOVE AND SALVAGE FOR REUSE ACT SYSTEM, LIGHTS, AND CEILING MOUNTED EQUIPMENT, TYP.
3. REMOVE EXISTING HOLLOW METAL DOORS. EXISTING DOOR FRAME TO REMAIN.
4. REMOVE AND SALVAGE FOR REUSE EXISTING STEEL BASE PLATE, POSTS, AND BEAM FOR NEW LOCATION ON DOCK PLATFORM. PATCH CONCRETE AS REQUIRED TO CREATE A SMOOTH LEVEL SURFACE. SHORE STRUCTURE AS NEEDED. SEE SHORING NOTES ABOVE.
5. GENERAL CONTRACTOR TO PROTECT AND REPAIR ANY DAMAGES TO THE SITE, INCLUDING BUT NOT LIMITED TO PAVEMENT AND CURB ADJACENT TO THE BUILDING, EXTERIOR WALLS AND STOREFRONT, EXISTING ELECTRICAL FIXTURES, LANDSCAPE FEATURES, INCLUDING ANY VEGETATION OR OTHER UTILITIES, ETC, AS A RESULT OF CONSTRUCTION ACTIVITY DURING THE DURATION OF THE PROJECT.
6. AT EXISTING WALLS, PATCH, REPAIR, AND REUSE GYPSUM BOARD WHERE POSSIBLE TO ACHIEVE LIKE NEW CONDITION.
7. REMOVE CLOSET DOORS, INTERIOR STUD PARTITIONS & ALL RELATED ACCESSORIES, TYP.
8. REMOVE ALL EXISTING WALL BASES & RELATED ATTACHMENTS.
9. REMOVE ALL EXISTING FLOORING FINISHES TO EXISTING SLAB AND PREP FOR NEW FLOORING.
10. CONTRACTOR SHALL PROVIDE TEMPORARY BARRIERS AS NEEDED TO SECURE THE EXISTING BUILDING DURING THE DEMOLITION AND CONSTRUCTION PROCESS.
11. CONTRACTOR SHALL PATCH, REPAIR, REFINISH AND/OR REPLACE WHEREVER REQUIRED TO PROVIDE A CONSISTENT FINISH IN AREAS OF CONSTRUCTION THROUGHOUT THE EXISTING BUILDING.
12. EXISTING LOADING DOCK BUMPERS TO BE REMOVED.
13. DEMOLISH EXISTING CONCRETE STAIRS, HANDRAIL AND GUARDRAIL – PATCH AS REQUIRED.
14. EXISTING CONCRETE DOCK PLATFORM TO REMAIN.
15. EXISTING LOOSE STONE TO BE REMOVED AND REPLACED AFTER INSULATION AND METAL PANEL WORK IS COMPLETED.
16. EXISTING CONCRETE CURB TO BE REMOVED FOR ACCESS TO LOADING DOCK FOUNDATION – PATCH TO MATCH EXISTING.
17. EXISTING ASPHALT PAVING TO BE REMOVED FOR ACCESS TO LOADING DOCK FOUNDATION – PATCH TO MATCH EXISTING.
18. TRENCH SLAB FOR FLOOR DRAIN RELOCATION – SEE MECHANICAL DRAWINGS FOR DETAILS
19. CAP ABANDONED AIR DUCTS ABOVE CEILING WITH AIRTIGHT SEAL – SEE MECHANICAL DRAWINGS

DEMOLITION FLOOR PLAN LEGEND:

- EXISTING WALLS, DOORS, FRAMING, ETC. TO BE DEMOLISHED (TYP)
- EXISTING WALLS TO REMAIN
- N.I.C.

GENERAL DEMOLITION NOTES:

01–PROTECTION

01 ALL RULES AND REGULATIONS GOVERNING THE RESPECTIVE UTILITIES SHALL BE OBSERVED IN EXECUTING ALL DEMOLITION WORK. ALL WORK SHALL BE EXECUTED IN SUCH A MANNER AS TO PREVENT ANY DAMAGE TO THE EXISTING BUILDING, SERVICE UTILITY LINES AND STRUCTURES.

02 THE CONTRACTOR SHALL ASSUME FULL RESPONSIBILITY FOR DAMAGES TO THE EXISTING BUILDING, AS WELL AS ADJOINING PRIVATE SPACES AND PROPERTY CAUSED BY HIS SUBCONTRACTORS' EQUIPMENT AND PERSONNEL.

03 PERFORM THE WORK IN SUCH A MANNER AS TO CAUSE NO INTERFERENCE WITH ACCESS BY THIS SUBCONTRACTOR OR OTHER CONTRACTORS TO ALL PORTIONS OF THE BUILDING AS NECESSARY FOR THE NORMAL CONDUCT OF THEIR WORK.

04 THE CONTRACTOR SHALL NOT COMMENCE DEMOLITION WORK UNTIL ITEMS SCHEDULED TO REMAIN HAVE BEEN ADEQUATELY PROTECTED OR REMOVED. TAKE ALL POSSIBLE PRECAUTIONS TO AVOID DAMAGING THOSE ITEMS WHICH HAVE BEEN SPECIFIED TO BE STORED FOR REUSE.

05 CONTRACTOR TO SECURE ALL OPENINGS AND BUILDING AT END OF EACH DAY.

02 – CLEAN UP

01 PROMPTLY REMOVE ANY DEMOLITION DEBRIS OR SIMILAR MATERIAL, KEEPING THE AREA CLEAN AT ALL TIMES.

02 CONTRACTOR TO COORDINATE WITH THE VA ON LOCATION OF DUMPSTER DURING CONSTRUCTION AND SCHEDULING OF REMOVAL.

03–PREPARTION

01 NOTIFY ALL CORPORATIONS, COMPANIES, INDIVIDUALS OR LOCAL AUTHORITIES OWNING OR HAVING JURISDICTION OVER UTILITIES RUNNING TO, THROUGH OR ACROSS AREAS TO BE DISTURBED BY DEMOLITION OPERATIONS.

02 HAVE ALL UTILITY SERVICES NOT OTHERWISE DESIGNATED TO BE DISCONNECTED BY THE CONTRACTOR DISCONNECTED AT SERVICE MAINS BY THE GOVERNING UTILITY INVOLVED, UNLESS OTHERWISE SHOWN ON THE DRAWINGS OR DIRECTED BY THE ARCHITECT.

04–SHORING

01 THE CONTRACTOR SHALL SHORE, BRACE, OR OTHERWISE SUPPORT THE STRUCTURE AS REQUIRED TO MAINTAIN STRUCTURAL INTEGRITY AT ALL TIMES. SHORING DESIGN SHALL BE PROVIDED BY THE G. C.

05–DEMOLITION

01 DEMOLISH DESIGNATED EXISTING FEATURES AS NOTED TO PREPARE THE BUILDING FOR ALL OTHER WORK AS SPECIFIED OR AS SHOWN ON THE DRAWINGS AND AS ORDERED BY THE ARCHITECT.

02 REMOVE AND SALVAGE MATERIAL REQUIRED FOR LATER REUSE AS SHOWN ON THE DRAWINGS AND AS DIRECTED BY THE ARCHITECT.

05 ANY SALVAGE WORK PERFORMED BY THE CONTRACTOR SHALL NOT DELAY OR OBSTRUCT ANY OTHER DEMOLITION AND CONSTRUCTION WORK ON THE JOBSITE.

04 REMOVE AND DISPOSE OF ALL UNSUITABLE MATERIAL OFF SITE. THE VA SHALL HAVE RIGHT OF FIRST REFUSAL FOR ALL MATERIALS. REMOVE ANY STORED MATERIAL DEEMED SURPLUS BY THE ARCHITECT AT NO ADDITIONAL COST TO THE VA.

05 CONTRACTOR SHALL PROVIDE A LEVEL FLOOR, READY TO RECEIVE HIGH QUALITY FINISHES AT LOCATIONS WHERE NEW FLOORING FINISHES ARE DESIGNATED TO BE INSTALLED.

06–OWNER

01 DEMOLISHED MATERIAL
A ALL DEMOLISHED MATERIAL DECLARED UNSUITABLE BY THE ARCHITECT SHALL BECOME THE PROPERTY OF THE CONTRACTOR AND SHALL BE LEGALLY DISPOSED OF, OFF THE PREMISES, UNLESS OTHERWISE INDICATED OR SPECIFIED.
B KEEP ALL EXITS, PUBLIC WAYS AND EGRESS PASSAGEWAYS CLEAR OF ALL DEBRIS AT ALL TIMES.

02 LEAVE THE PREMISES IN A SAFE, CLEAN AND RELATIVELY ORDERLY CONDITION UPON COMPLETION OF WORK.

03 PROVIDE DUST CONTROL MEASURES AS NECESSARY TO PREVENT SPREADING DUST AND TO SUIT THE CONDITIONS OF THE PROJECT.

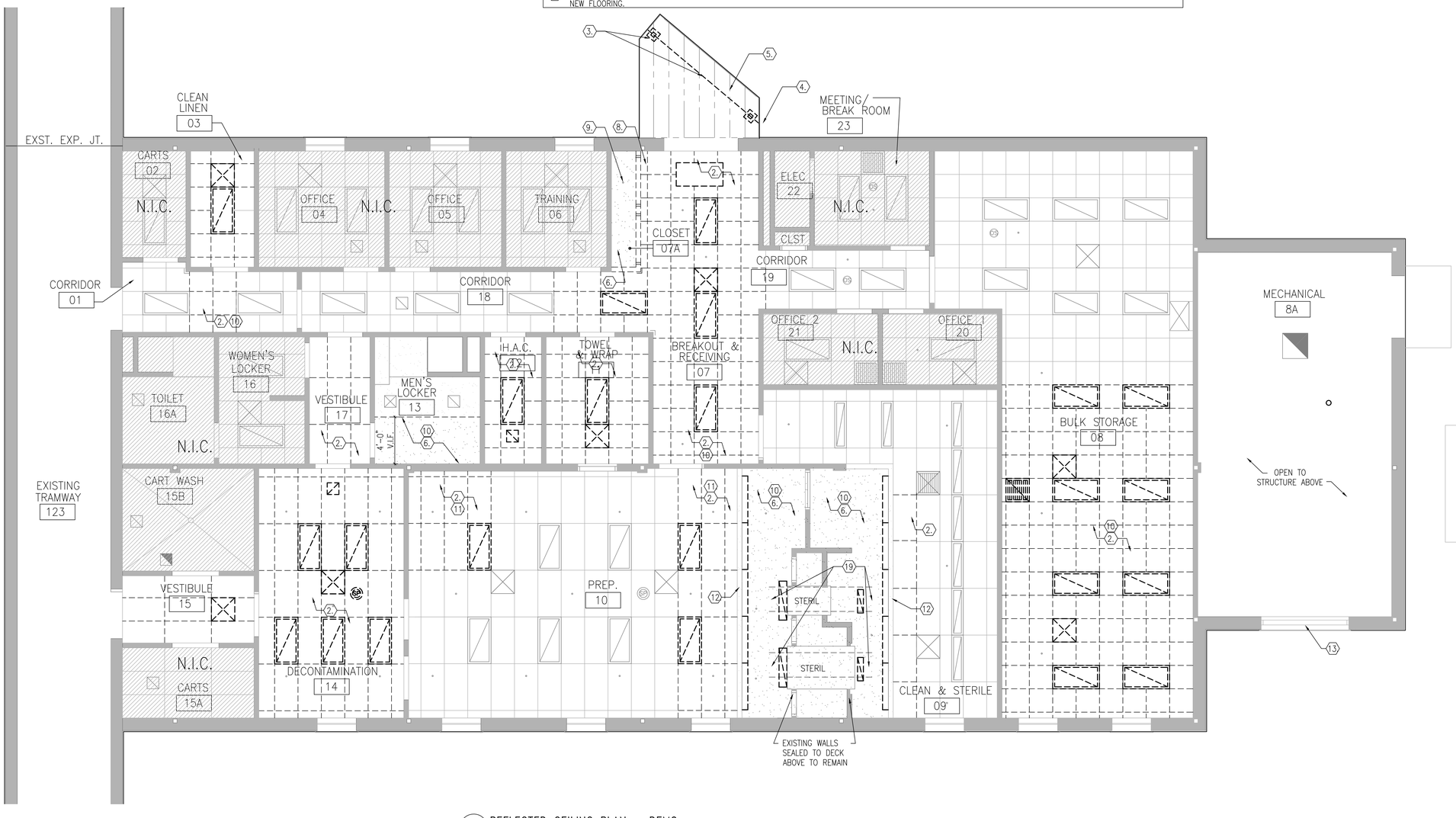

1 A-452 / 2.2 REFLECTED CEILING PLAN – DEMO
SCALE: 1/4" = 1'-0"

KEYPLAN

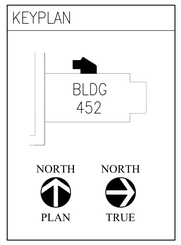

FULLY SPRINKLED

Revisions:	Date

CONSULTANTS:

MEP ASSOCIATES, LLC

ARCHITECT/ENGINEERS:

ANDERSON ENGINEERING
ENGINEERING • ARCHITECTURE • LAND SURVEYING
ENVIRONMENTAL SERVICES • LANDSCAPE ARCHITECTURE

Anderson Engineering of Minnesota, LLC
13605 1st Avenue North
Suite 100
Plymouth, MN 55441
763-412-4000 (o) 763-412-4090 (f)
www.ae-mn.com

Drawing Title: REFLECTED CEILING PLAN - DEMO

Approved: Project Director

Project Title: CORRECT GAP DEFICIENCIES AT SPS

Location: VA MEDICAL CENTER TOMAH WI

Date: 12-17-2013 | Checked: PR | Drawn: WSH

Project Number: 676-13-106

Building Number: 452

Drawing Number: A-452-2.2

Dwg. 4 of 27

Office of Construction and Facilities Management

Department of Veterans Affairs

VA FORM 08-6231 (MAR 2012)

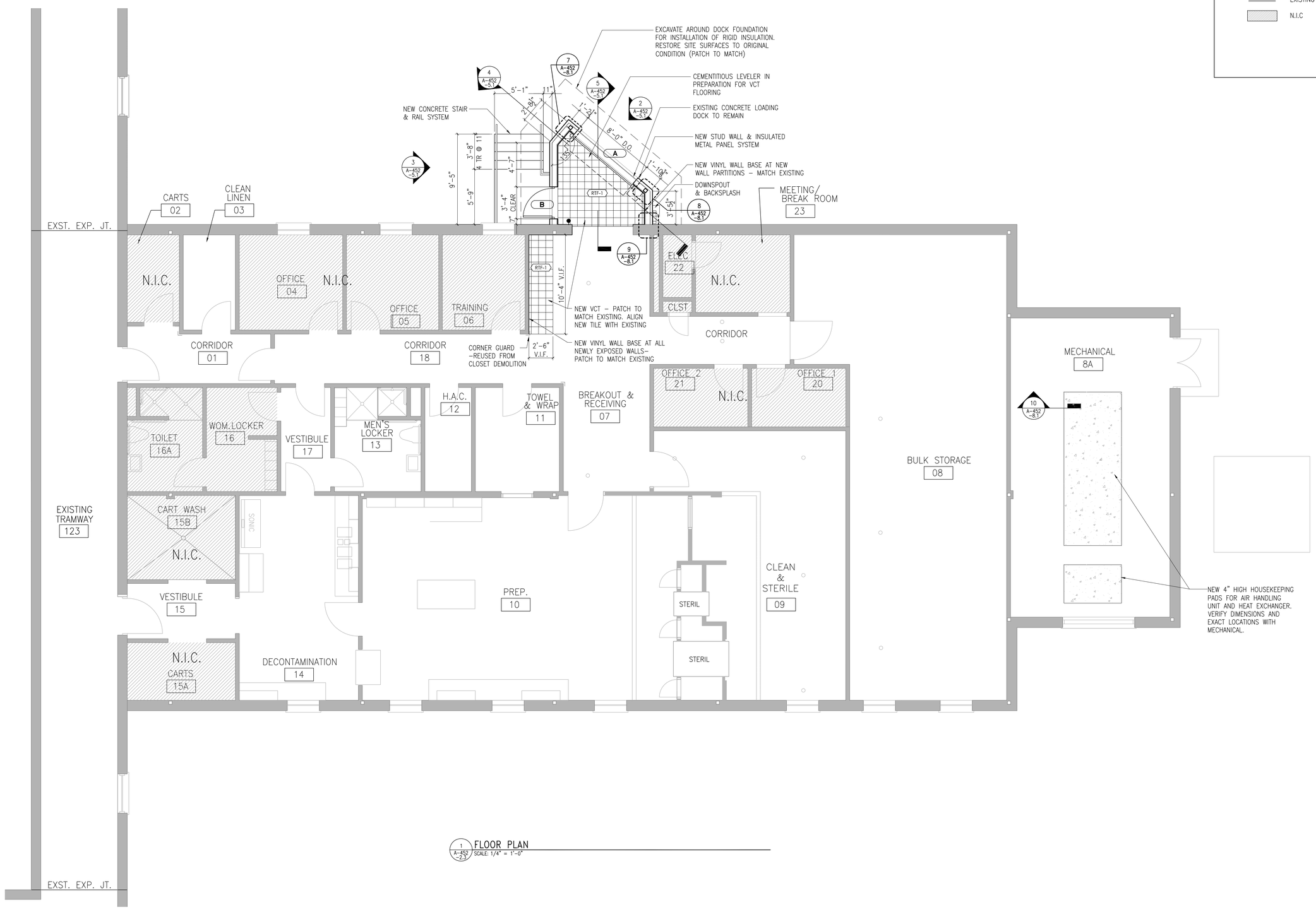

1 A-452-2.3 FLOOR PLAN
SCALE: 1/4" = 1'-0"

FLOOR PLAN LEGEND:

EXISTING WALLS TO REMAIN

N.I.C

KEYPLAN

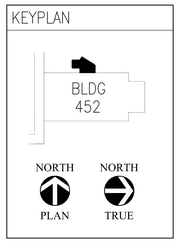

FULLY SPRINKLED

Revisions: Date

CONSULTANTS:

MEP ASSOCIATES, LLC

ARCHITECT/ENGINEERS:

ANDERSON ENGINEERING
ENGINEERING • ARCHITECTURE • LAND SURVEYING
ENVIRONMENTAL SERVICES • LANDSCAPE ARCHITECTURE

Anderson Engineering of Minnesota, LLC
13605 1st Avenue North
Suite 100
Plymouth, MN 55441
763-412-4000 (o) 763-412-4090 (f)
www.ae-mn.com

Drawing Title: FLOOR PLAN

Approved: Project Director

Project Title: CORRECT GAP DEFICIENCIES AT SPS

Location: VA MEDICAL CENTER TOMAH WI

Date: 12-17-2013 | Checked: PR | Drawn: WSH

Project Number: 676-13-106

Building Number: 452

Drawing Number: A-452-2.3

Dwg. 5 of 27

Office of Construction and Facilities Management

Department of Veterans Affairs

VA FORM 08-6231 (MAR 2012)

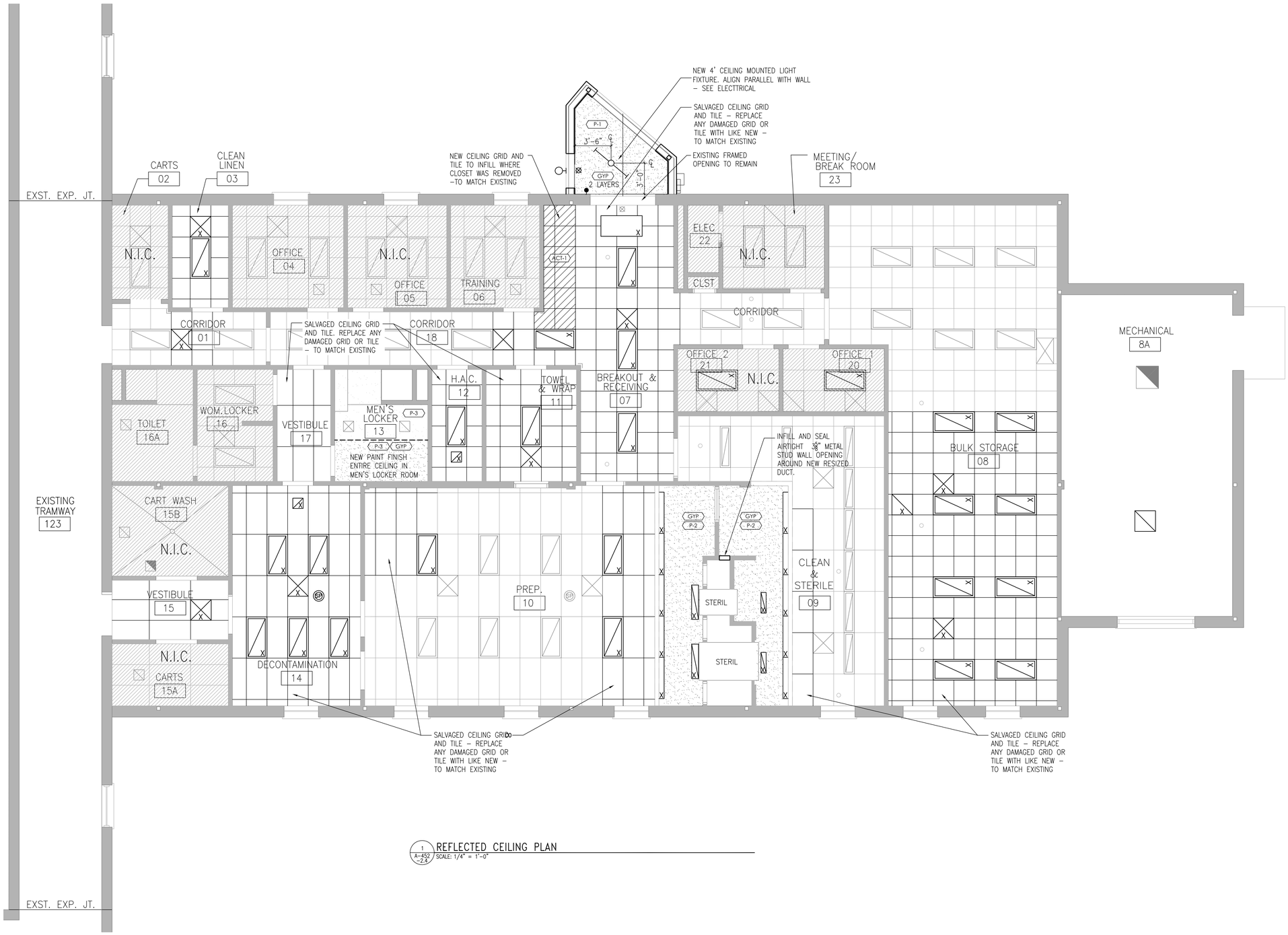

1 A-452 -2.4 REFLECTED CEILING PLAN
SCALE: 1/4" = 1'-0"

REFLECTED CEILING PLAN LEGEND:

- EXISTING WALLS TO REMAIN
- N.I.C.
- EXISTING SPEAKER TO REMAIN
- SALVAGED & REUSED SPEAKER
- EXISTING SPRINKLER HEAD
- NEW WALL MOUNTED SPRINKLER HEAD
- EXISTING EMERGENCY EXIT LIGHT FIXTURE
- NEW EMERGENCY EXIT LIGHT FIXTURE
- RELOCATED WALL MOUNTED LIGHT FIXTURE - SEE ELEC.
- NEW CEILING MOUNTED LIGHT FIXTURE - SEE ELEC.
- EXISTING 1X4 LAY-IN FLUORESCENT TO REMAIN
- SALVAGED & REUSED LIGHT FIXTURE
- EXISTING 2X4 LAY-IN FLUORESCENT TO REMAIN
- SALVAGED & REUSED LAY-IN FLUORESCENT
- EXISTING DIFFUSER
- SALVAGED & REUSED DIFFUSER
- EXISTING SUPPLY
- SALVAGED & REUSED SUPPLY
- EXISTING GYP. BD. CEILING
- NEW GYP. BD. CEILING
- EXISTING ACT TO REMAIN
- SALVAGED & REUSED ACT SYSTEM
- NEW ACT

KEYPLAN

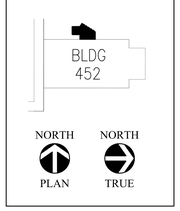

FULLY SPRINKLED

Revisions:	Date

CONSULTANTS:

MEP ASSOCIATES, LLC

ARCHITECT/ENGINEERS:

ANDERSON ENGINEERING
ENGINEERING • ARCHITECTURE • LAND SURVEYING
ENVIRONMENTAL SERVICES • LANDSCAPE ARCHITECTURE

Anderson Engineering of Minnesota, LLC
13605 1st Avenue North
Suite 100
Plymouth, MN 55441
763-412-4000 (o) 763-412-4090 (f)
www.ae-mn.com

Drawing Title	REFLECTED CEILING PLAN
Approved: Project Director	
Project Title	CORRECT GAP DEFICIENCIES AT SPS
Location	VA MEDICAL CENTER TOMAH WI
Date	12-17-2013
Checked	PR
Drawn	WSH
Project Number	676-13-106
Building Number	452
Drawing Number	A-452-2.4
Dwg.6 of 27	

Office of Construction and Facilities Management

Department of Veterans Affairs

VA FORM 08-6231 (MAR 2012)

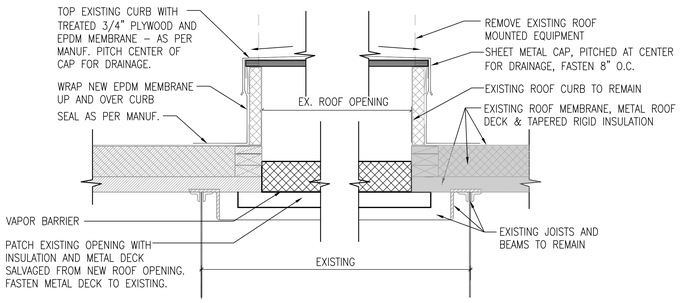

3 A-452 -3.1 CAP AND SEAL ROOF DETAL
SCALE: 1 1/2" = 1'-0"

NOTE:
1. STEEL CONTRACTOR SHALL VERIFY ALL OPENINGS AND EXACT LOCATIONS WITH THE TRADE CONTRACTOR REQUIRING SAID OPENING PRIOR TO FABRICATION AND ERECTION OF STEEL FRAMES.

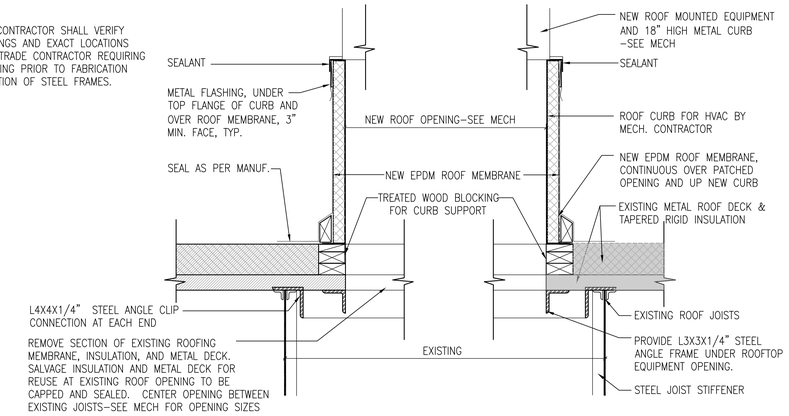

2 A-452 -3.1 NEW ROOF CURB DETAIL
SCALE: 1 1/2" = 1'-0"

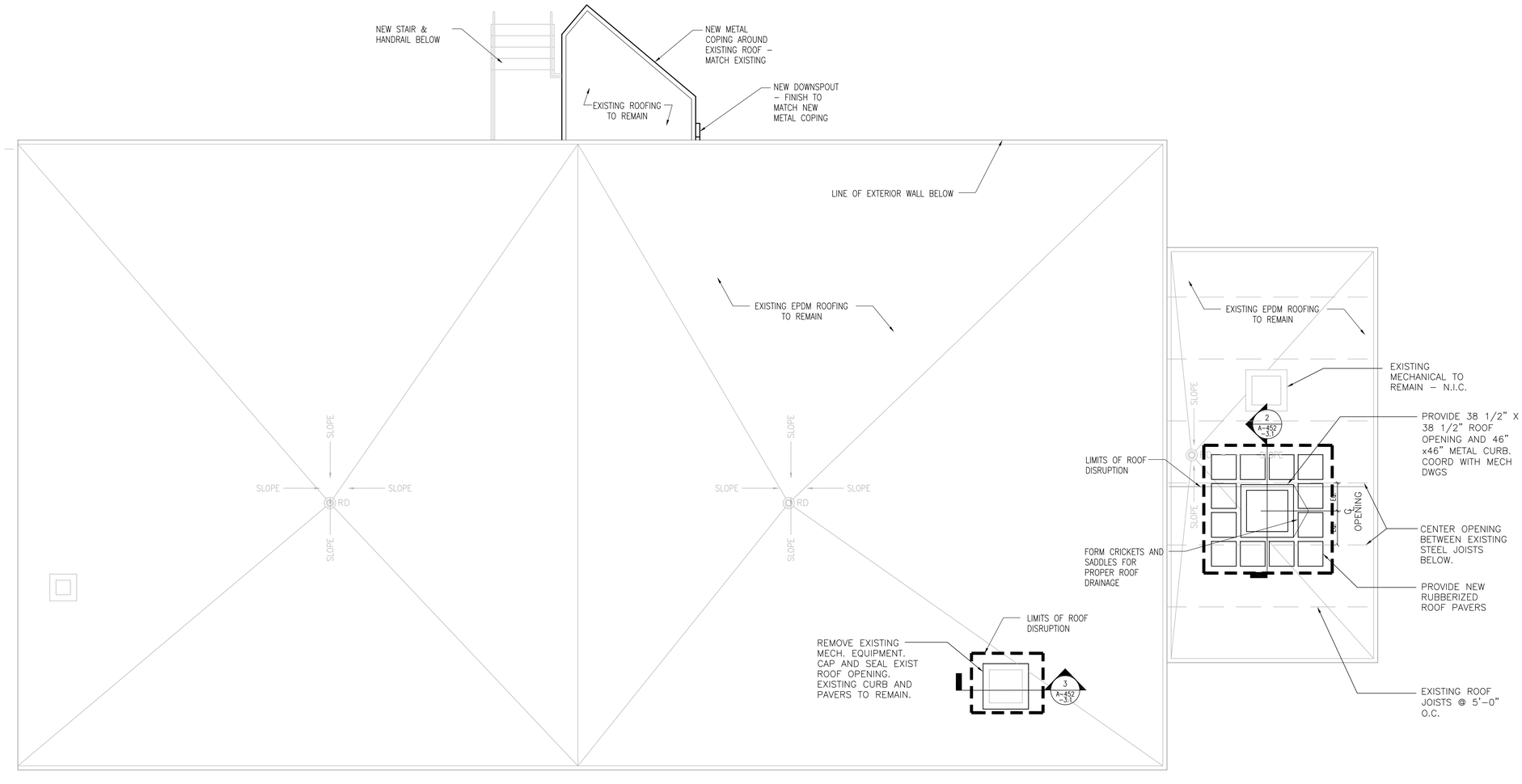

1 A-452 -3.1 ROOF PLAN
SCALE: 1/4" = 1'-0"

KEYPLAN

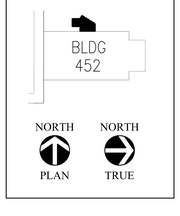

FULLY SPRINKLED

Revisions	Date

CONSULTANTS:

MEP ASSOCIATES, LLC

ARCHITECT/ENGINEERS:

ANDERSON ENGINEERING
ENGINEERING • ARCHITECTURE • LAND SURVEYING
ENVIRONMENTAL SERVICES • LANDSCAPE ARCHITECTURE

Anderson Engineering of Minnesota, LLC
13605 1st Avenue North
Suite 100
Plymouth, MN 55441
763-412-4000 (o) 763-412-4090 (f)
www.ae-mn.com

Drawing Title: ROOF PLAN

Approved Project Director:

Project Title: CORRECT GAP DEFICIENCIES AT SPS

Location: VA MEDICAL CENTER TOMAH WI

Date: 12-17-2013 | Checked: PR | Drawn: WSH

Project Number: 676-13-106

Building Number: 452

Drawing Number: A-452-3.1

Dwg. 7 of 27

Office of Construction and Facilities Management

Department of Veterans Affairs

VA FORM 08-6231 (MAR 2012)

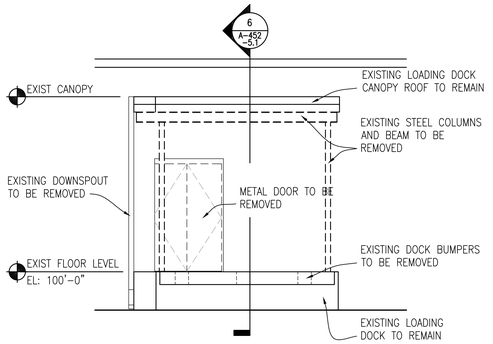

1 A-452 -5.1 ELEVATION AT EXISTING CONDITIONS
SCALE: 1/4"=1'-0"

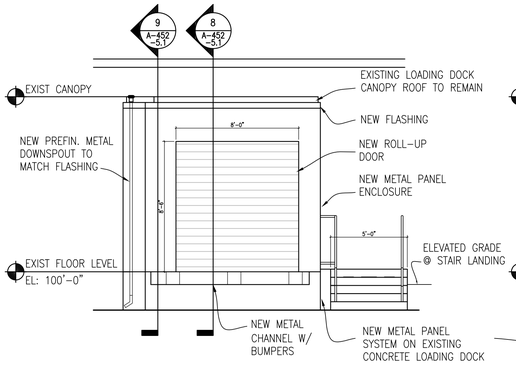

2 A-452 -5.1 ELEVATION
SCALE: 1/4"=1'-0"

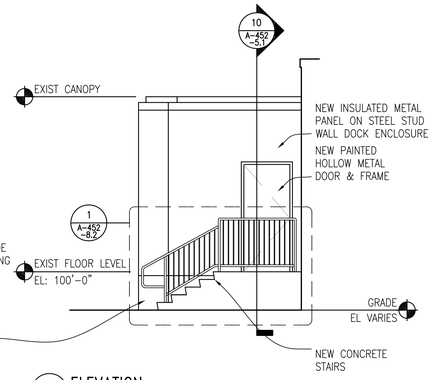

3 A-452 -5.1 ELEVATION
SCALE: 1/4"=1'-0"

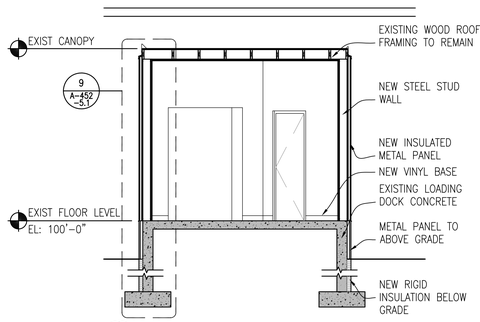

4 A-452 -5.1 SECTION
SCALE: 1/4"=1'-0"

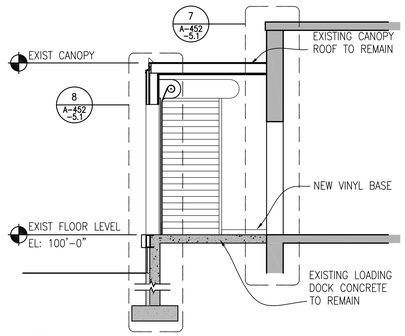

5 A-452 -5.1 SECTION
SCALE: 1/4"=1'-0"

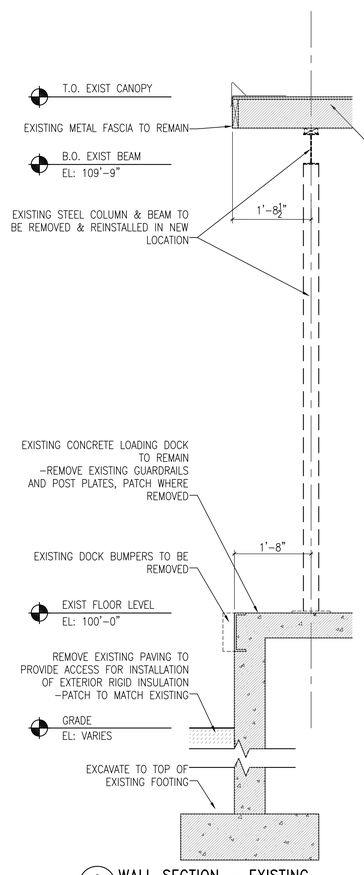

6 A-452 -5.1 WALL SECTION – EXISTING
SCALE: 3/4"=1'-0"

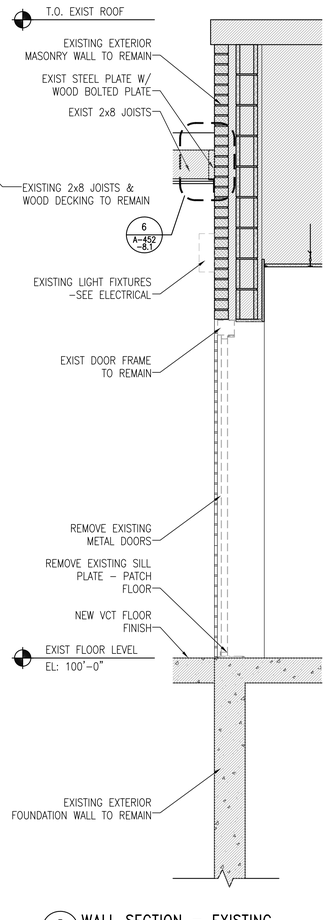

7 A-452 -5.1 WALL SECTION – EXISTING
SCALE: 3/4"=1'-0"

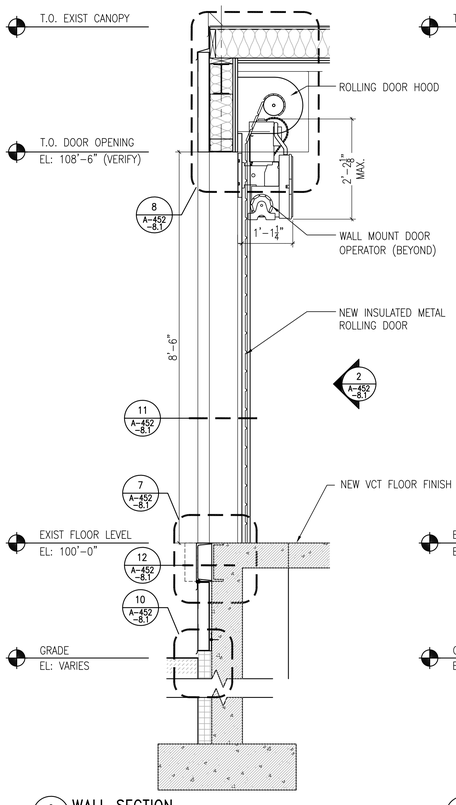

8 A-452 -5.1 WALL SECTION
SCALE: 3/4"=1'-0"

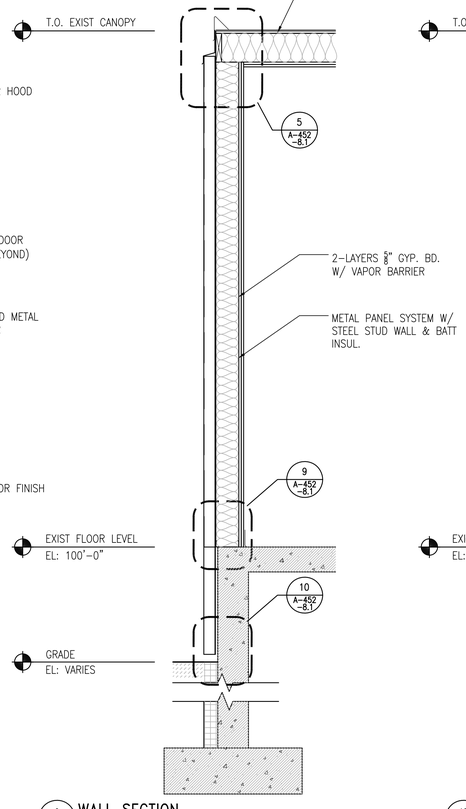

9 A-452 -5.1 WALL SECTION
SCALE: 3/4"=1'-0"

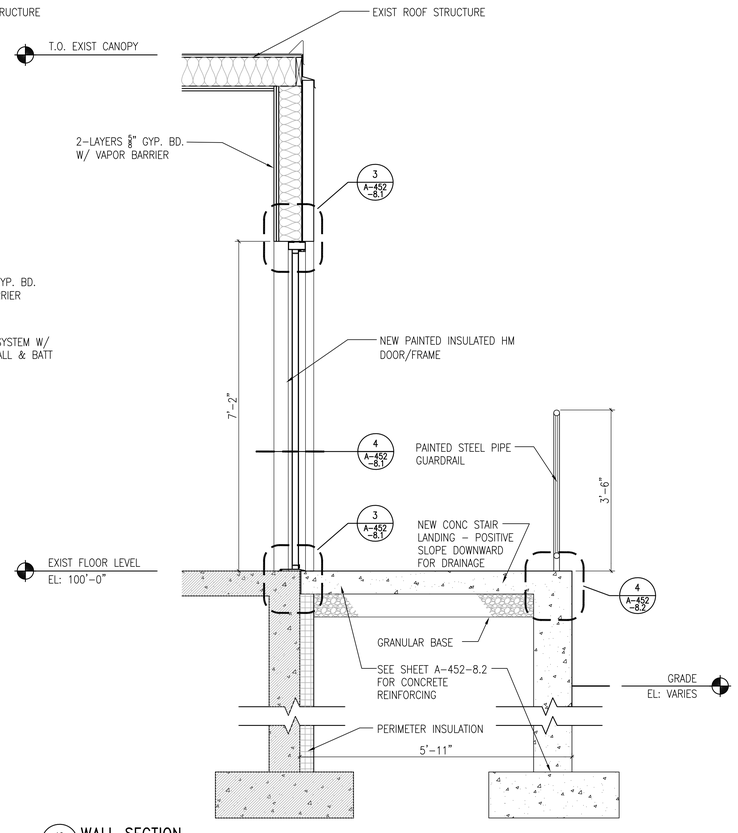

10 A-452 -5.1 WALL SECTION
SCALE: 3/4"=1'-0"

FULLY SPRINKLED

Revisions:	Date

CONSULTANTS:

MEP ASSOCIATES, LLC

ARCHITECT/ENGINEERS:

ANDERSON ENGINEERING
ENGINEERING • ARCHITECTURE • LAND SURVEYING
ENVIRONMENTAL SERVICES • LANDSCAPE ARCHITECTURE

Anderson Engineering of Minnesota, LLC
13605 1st Avenue North
Suite 100
Plymouth, MN 55441
763-412-4000 (o) 763-412-4090 (f)
www.ae-mn.com

Drawing Title: SECTIONS AND ELEVATIONS

Approved: Project Director

Project Title: CORRECT GAP DEFICIENCIES AT SPS

Location: VA MEDICAL CENTER TOMAH WI

Date	Checked	Drawn
12-17-2013	PR	WSH

Project Number: 676-13-106

Building Number: 452

Drawing Number: A-452-5.1

Dwg. 8 of 27

Office of Construction and Facilities Management

Department of Veterans Affairs

VA FORM 08-6231 (MAR 2012)

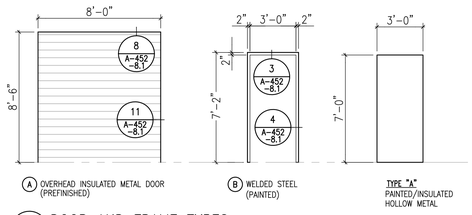

1 A-452 -8.1 DOOR AND FRAME TYPES
SCALE: 1/4"=1'-0"

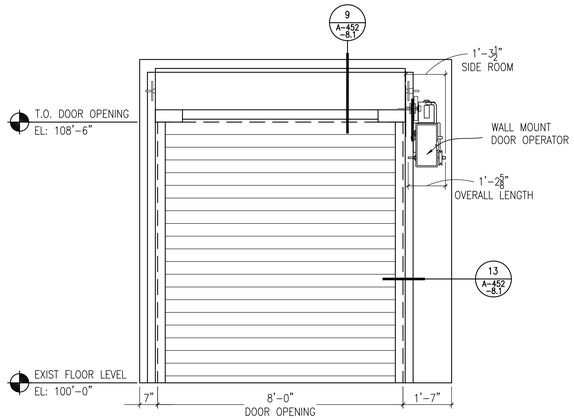

2 A-452 -8.1 ROLL-UP DOOR ELEVATION
SCALE: 1/2"=1'-0"

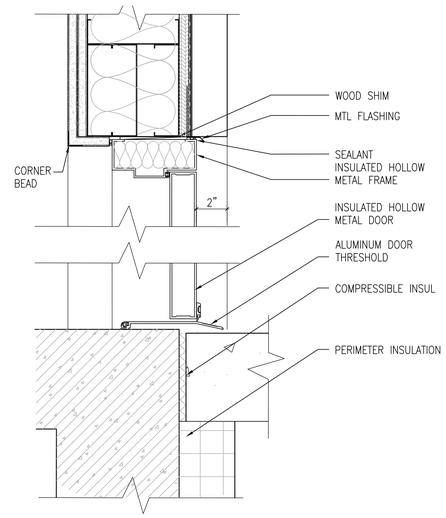

3 A-452 -8.1 DOOR HEAD/SILL DETAIL
SCALE: 3"=1'-0"

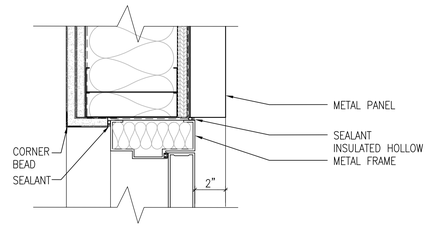

4 A-452 -8.1 DOOR JAMB DETAIL
SCALE: 3"=1'-0"

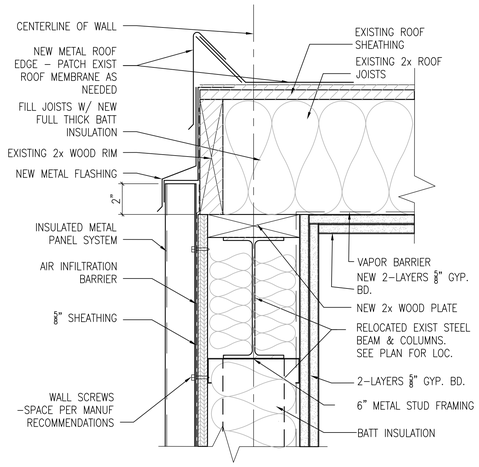

5 A-452 -8.1 TYPICAL EAVE DETAIL
SCALE: 3"=1'-0"

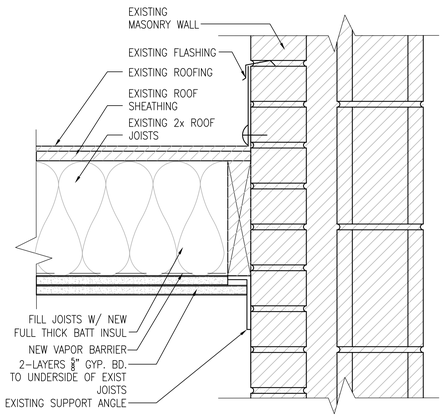

6 A-452 -8.1 DETAIL AT EXISTING WALL
SCALE: 3"=1'-0"

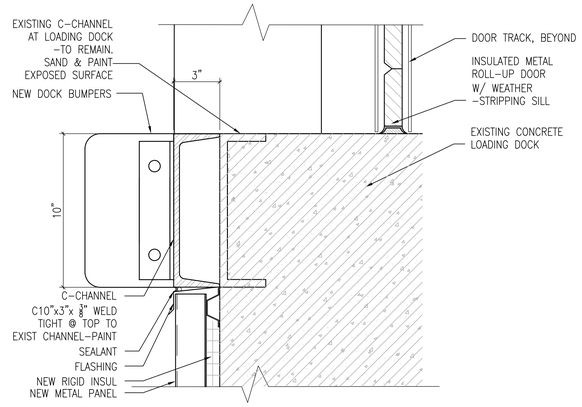

7 A-452 -8.1 SILL DETAIL AT ROLLING DOOR
SCALE: 3"=1'-0"

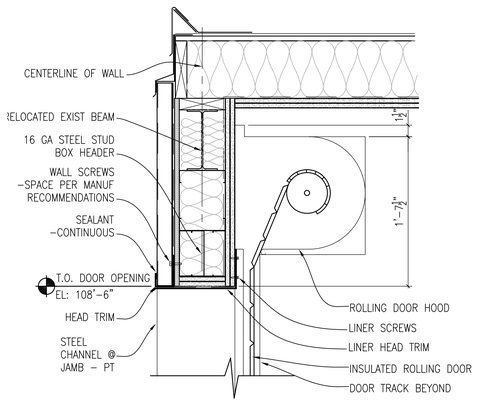

8 A-452 -8.1 ROLLUP DOOR HEAD DETAIL
SCALE: 1 1/2"=1'-0"

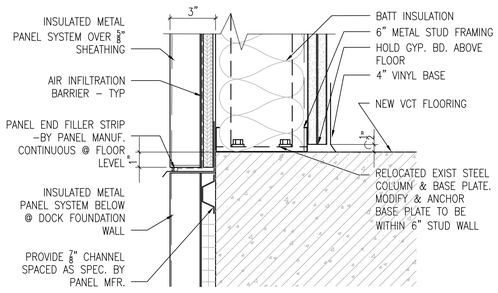

9 A-452 -8.1 BASE DETAIL
SCALE: 3"=1'-0"

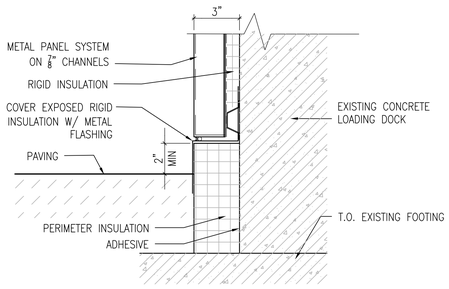

10 A-452 -8.1 INSULATION DETAIL
SCALE: 3"=1'-0"

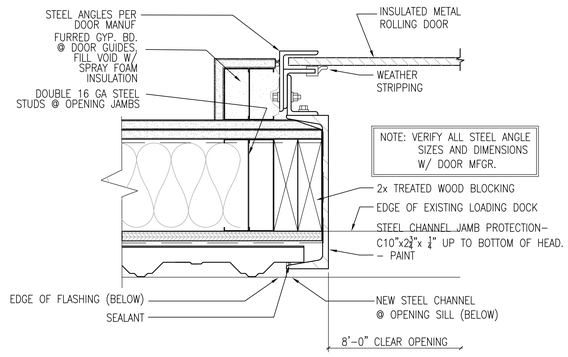

11 A-452 -8.1 ROLLUP DOOR JAMB DETAIL
SCALE: 3"=1'-0"

NOTE: WELD ALL STEEL CONNECTIONS TIGHT. GRIND SMOOTH & PAINT

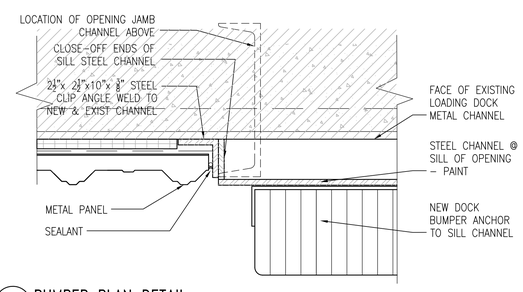

12 A-452 -8.1 BUMPER PLAN DETAIL
SCALE: 3"=1'-0"

FULLY SPRINKLED

Revisions:	Date

CONSULTANTS:

MEP ASSOCIATES, LLC

ARCHITECT/ENGINEERS:

ANDERSON ENGINEERING
ENGINEERING • ARCHITECTURE • LAND SURVEYING
ENVIRONMENTAL SERVICES • LANDSCAPE ARCHITECTURE

Anderson Engineering of Minnesota, LLC
13605 1st Avenue North
Suite 100
Plymouth, MN 55441
763-412-4000 (o) 763-412-4090 (f)
www.ae-mn.com

Drawing Title: DETAILS

Approved: Project Director

Project Title: CORRECT GAP DEFICIENCIES AT SPS

Location: VA MEDICAL CENTER TOMAH WI

Date: 12-17-2013 | Checked: PR | Drawn: WSH

Project Number: 676-13-106

Building Number: 452

Drawing Number: A-452-8.1

Dwg. 9 of 27

Office of Construction and Facilities Management

Department of Veterans Affairs

VA FORM 08-6231 (MAR 2012)

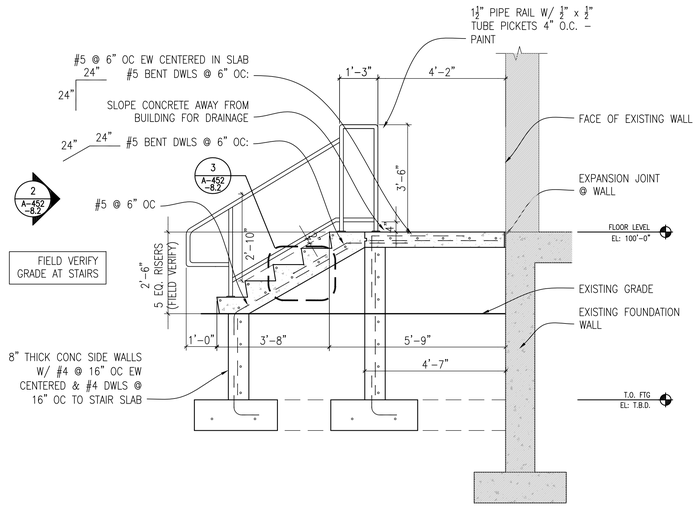

1 A-452/-8.2 SECTION THRU STAIR & INSIDE HANDRAIL
SCALE: 1/2"=1'-0"

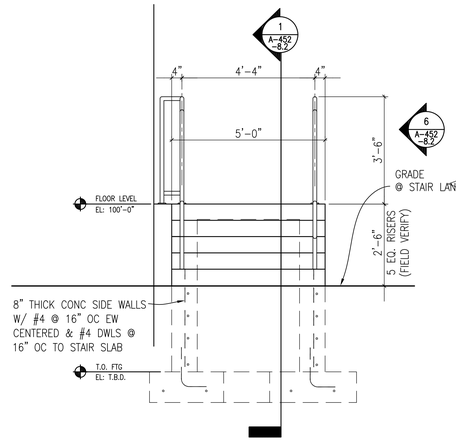

2 A-452/-8.2 SECTION @ STAIR
SCALE: 1/2"=1'-0"

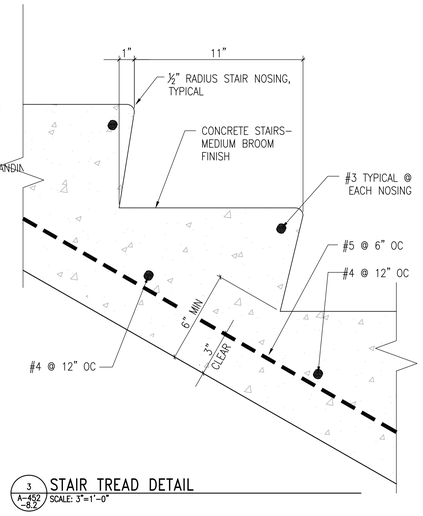

3 A-452/-8.2 STAIR TREAD DETAIL
SCALE: 3"=1'-0"

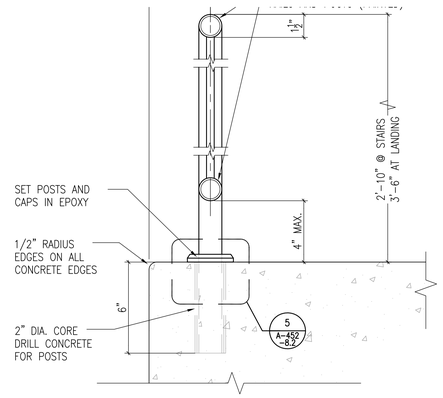

4 A-452/-8.2 CONCRETE POST DETAIL
SCALE: 3"=1'-0"

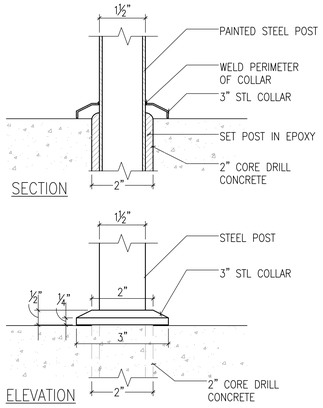

5 A-452/-8.2 CONCRETE POST DETAIL
SCALE: 6"=1'-0"

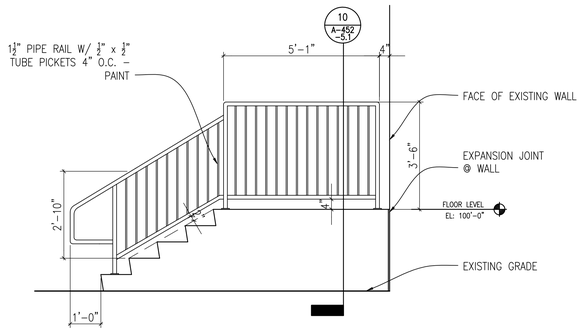

6 A-452/-8.2 ELEVATION OF STAIR & OUTSIDE GUARDRAIL
SCALE: 1/2"=1'-0"

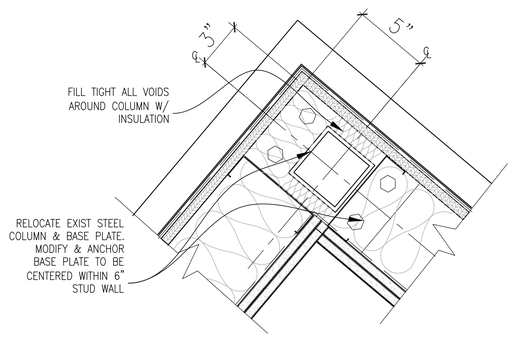

7 A-452/-8.2 STEEL COLUMN @ CORNER PLAN DETAIL
SCALE: 3"=1'-0"

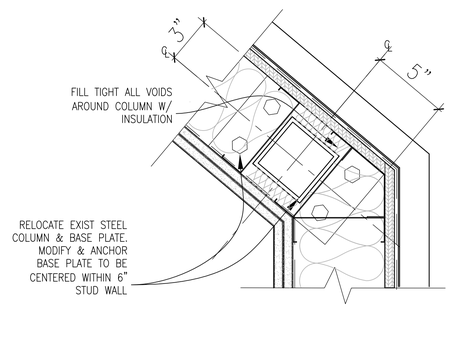

8 A-452/-8.2 STEEL COLUMN IN WALL PLAN DETAIL
SCALE: 3"=1'-0"

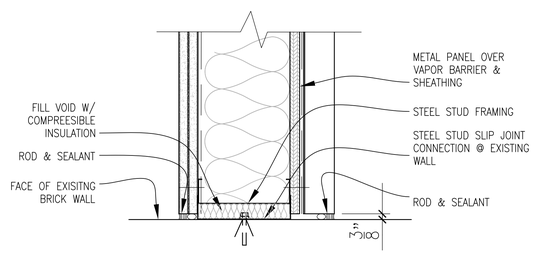

9 A-452/-8.2 NEW WALL CONNECTION @ EXISTING WALL
SCALE: 3"=1'-0"

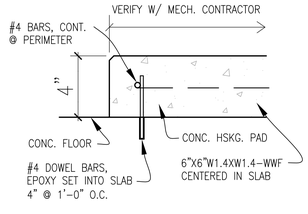

NOTE:
FOR SCOPE OF WORK REFER TO MECHANICAL DRAWINGS AND COORDINATE WITH MECHANICAL CONTRACTORS.

10 A-452/-8.2 CONCRETE HOUSEKEEPING PAD
SCALE: 3"=1'-0"

FULLY SPRINKLED

Revisions	Date

CONSULTANTS:

MEP ASSOCIATES, LLC

ARCHITECT/ENGINEERS:

ANDERSON ENGINEERING
ENGINEERING • ARCHITECTURE • LAND SURVEYING
ENVIRONMENTAL SERVICES • LANDSCAPE ARCHITECTURE

Anderson Engineering of Minnesota, LLC
13605 1st Avenue North
Suite 100
Plymouth, MN 55441
763-412-4000 (o) 763-412-4090 (f)
www.ae-mn.com

Drawing Title: DETAILS

Approved: Project Director

Project Title: CORRECT GAP DEFICIENCIES AT SPS

Location: VA MEDICAL CENTER TOMAH WI

Date: 12-17-2013 | Checked: PR | Drawn: WSH

Project Number: 676-13-106

Building Number: 452

Drawing Number: A-452-8.2

Dwg. 10 of 27

Office of Construction and Facilities Management

Department of Veterans Affairs

VA FORM 08-6231 (MAR 2012)

GENERAL NOTES

1. ALL WORK SHALL BE IN COMPLIANCE WITH THE MOST STRINGENT OF FEDERAL, STATE AND LOCAL CODES, HOSPITAL POLICY, AND THE MARCH 2011 HVAC DESIGN MANUAL FOR NEW, REPLACEMENT, ADDITION, AND RENOVATION OF EXISTING VA FACILITIES.
2. INSTALL ALL EQUIPMENT IN ACCORDANCE WITH MANUFACTURERS RECOMMENDATIONS.
3. CONTRACTOR SHALL REMOVE ALL ABANDONED PIPES AND DUCTS BACK TO MAIN OR SOURCE. REMOVE ALL HANGERS AND SUPPORTS ASSOCIATED WITH ABANDONED SYSTEM.
4. EXISTING UTILITIES TO BE ABANDONED SHALL BE PROPERLY DISCONNECTED AND CAPPED AS REQUIRED BACK TO SOURCE.
5. THESE DRAWINGS ARE DIAGRAMMATIC AND SHALL NOT BE SCALED. ADDITIONAL DATA SHALL BE FROM THE ENGINEER THROUGH WRITTEN CLARIFICATION ONLY. VERIFY ALL EXISTING CONDITIONS, ELEVATIONS, AND DIMENSIONS PRIOR TO PROCEEDING WITH ANY PORTION OF ANY WORK. THE CONTRACTOR SHALL PROVIDE ALL OFFSETS AND TRANSITIONS REQUIRED TO MEET EXISTING CONDITIONS. A PRE-BID SITE SURVEY IS RECOMMENDED. NO ADDITIONAL CHARGES, AT OWNERS EXPENSE, FOR REVISIONS DUE TO EXISTING SITE CONDITIONS.
6. THE CONTRACTOR SHALL PERFORM WORK IN A SKILLED AND PROFESSIONAL MANNER.
7. ALL CONTRACTORS ARE RESPONSIBLE TO FIELD COORDINATE WORK SCHEDULE AND VERIFY AREA SHUTDOWN WITH THE OWNER REPRESENTATIVE (COR) PRIOR TO CONSTRUCTION. PROVIDE A MINIMUM OF 2 WEEKS ADVANCED NOTIFICATION.
8. THE CONTRACTOR SHALL WORK AND COORDINATE WITH THE OTHER TRADES.
9. ALL EQUIPMENT SHALL BE NEW AND IN UNDAMAGED CONDITION. ANY EQUIPMENT FOUND DEFECTIVE SHALL BE IMMEDIATELY REMOVED FROM THE PROJECT.
10. ALL EQUIPMENT SHALL BE INSTALLED IN A MANOR TO ALLOW SERVICE. SEE SPECIFICATIONS.
11. MECHANICAL CONTRACTOR TO REPAIR ANY DAMAGE DONE TO THE FIRE PROOFING WHILE INSTALLING THE MECHANICAL TRADES. SEAL ALL PENETRATIONS THROUGH RATED STRUCTURES WITH UL LISTED FIRE SEAL DESIGNED FOR THE SPECIFIED APPLICATION.
12. CONTRACTOR SHALL TAKE ALL PRECAUTIONARY MEASURES TO PROTECT THE PUBLIC AND ADJACENT PROPERTIES FROM DAMAGE THROUGHOUT CONSTRUCTION.
13. CONTRACTOR SHALL GUARANTEE ALL WORKMANSHIP AND MATERIALS FOR A PERIOD OF ONE (1) YEAR FROM THE DATE OF SUBSTANTIAL COMPLETION OR AS OTHERWISE REQUIRED IN THE SPECIFICATIONS.
14. AT PROJECT COMPLETION, RECORD (AS-BUILT) DRAWINGS, REDLINE MARK-UPS TO PLANS, SUPPORTED BY NECESSARY DETAIL, SHALL BE PROVIDED BY THE CONTRACTOR TO THE PROJECT HVAC ENGINEER WITH COLOR COPY TO VA COR. ALL CHANGES IN PIPING AND DUCTWORK ARRANGEMENTS SHALL BE NOTED ON THE RECORD DRAWINGS.
15. CONTRACTOR SHALL SUPPLY ALL MATERIALS AND DEVICES TO MAINTAIN AND MONITOR NEGATIVE PRESSURE IN ALL CONSTRUCTION ZONES AND SHALL WORK WITHIN INTERIM LIFE SAFETY MEASURES (ILSM) PROVIDED BY THE OWNER.
16. ALL WORK IN CORRIDORS AND PUBLIC AREAS MUST BE COMPLETED DURING WEEKEND HOURS. NO LOUD NOISES, VIBRATIONS, OR DRILLING SHALL BE DONE AFTER 9:00 PM.
17. ALL WORK SHALL BE PERFORMED BY PERSONNEL LICENSED IN THE STATE OF WISCONSIN. (AS REQUIRED)
18. CONTRACTOR TO OFFSET, REVISE OR RELOCATE EQUIPMENT, DUCTWORK AND PIPING LOCATIONS AS REQUIRED FOR INSTALLATION. SUBMIT REVISIONS TO OWNER (COR) AND ENGINEER FOR APPROVAL PRIOR TO INSTALLATION.
19. CONTRACTOR TO MAKE ALTERATIONS TO EXISTING SERVICE PIPING AT TIMES THAT WILL PROVIDE THE LEAST INTERFERENCE WITH THE NORMAL OPERATION OF THE FACILITY.
20. CONTRACTOR TO REMOVE AND REPLACE DUCT SECTIONS AS REQUIRED FOR NEW DUCT AND PIPING INSTALLATION. COORDINATE WORK SCHEDULE AND AREA SHUTDOWN WITH THE OWNER REPRESENTATIVE (COR) PRIOR TO CONSTRUCTION.
21. PROVIDE FIRE AND SMOKE STOPPING IN ACCORDANCE WITH UL APPROVED SYSTEMS.
22. VERIFY ALL EXISTING CONDITIONS NOTIFY OWNER (COR) OF ANY CONFLICTS BETWEEN CONTRACT DRAWINGS AND ACTUAL CONDITIONS.
23. CONTRACTOR SHALL BE RESPONSIBLE FOR PRESSURE TESTING OF ALL DUCTS PROVIDED AS PART OF THIS PROJECT. FOR DUCTS CONNECTING TO EXISTING SYSTEMS, PRESSURE TESTING SHALL BE FROM THE POINT OF CONNECTION AT EXISTING MAINS AND RISERS THROUGH TO GRILLES AND REGISTERS. TESTING SHALL BE IN ACCORDANCE WITH THE LATEST EDITION OF SMACNA HVAC AIR DUCT LEAKAGE TESTING MANUAL.
24. DURING CONSTRUCTION PROTECT DUCTWORK FROM CONTAMINATION AND PROVIDE SEALING CAPS ON ALL OPEN DUCTWORK TO PREVENT DIRT AND DEBRIS FROM ENTERING DUCTWORK.
25. VISUALLY INSPECT AHU SUPPLY DUCTWORK TO VERIFY INTERIOR CLEANLINESS. DOCUMENT FINDINGS AND REVIEW WITH OWNER (COR). OWNER (COR) MAY INSPECT DUCTWORK AT JOB COMPLETION. IF DUCTWORK IS FOUND DIRTY, CONTRACTOR WILL BE RESPONSIBLE FOR CLEANING FROM CONSTRUCTION ZONE DUCT CONNECTION TO AHU DISCHARGE.
26. PRIOR TO START UP, ALL NEW DUCTS SHOULD BE CLEANED INSIDE AND OUTSIDE. CLEANING SHALL INCLUDE VACUUMING THE INTERIOR OF THE AIR HANDLING UNIT AND HEAT RECOVERY UNIT; FOLLOWED BY WIPING WITH A DAMP CLOTH. NOTIFY COR SUFFICIENTLY PRIOR TO MAKING DUCT CONNECTIONS SO VA CAN INSPECT INTERIORS.

FIRE PROTECTION NOTES

1. DEMO FIRE PROTECTION SPRINKLER PIPING BENEATH AIR HANDLING UNIT IN MECHANICAL ROOM.
2. AS NECESSARY REARRANGE FIRE PROTECTION SPRINKLER PIPING TO ALLOW FOR INSTALLATION OF NEW DUCTWORK AND EQUIPMENT.
3. PROVIDE FIRE PROTECTION FOR LOADING DOCK. PROVIDE DRY SIDEWALL HEADS TO PROTECT AREA.

ABBREVIATIONS

A/E	ARCHITECT / ENGINEER
AAV	AUTOMATIC AIR VENT
ACD	AUTOMATIC CONTROL DAMPER,MODULATING
ACD-TP	AUTOMATIC CONTROL DAMPER,TWO POSITION
AD	ACCESS DOOR
AFF	ABOVE FINISHED FLOOR
AFMD	AIR FLOW MEASURING DEVICE
AFW	AIR FOIL WHEEL (FAN)
AHU	AIR-HANDLING UNIT
APD	AIR PRESSURE DROP
BDD	BACKDRAFT DAMPER
BFP	BACKFLOW PREVENTER
BHP	BRAKE HORSEPOWER
BTU	BRITISH THERMAL UNIT
BTUH	BRITISH THERMAL UNIT PER HOUR
C	CENTIGRADE (CELCIUS)
CFM	CUBIC FEET PER MINUTE
COP	COEFFICIENT OF PERFORMANCE
CV	CONSTANT VOLUME
COR	CONTRACTING OFFICER REPRESENTATIVE
D	DAMPER - AUTOMATIC
Db	DRY-BULB TEMPERATURE
DDC	DIRECT DIGITAL CONTROLS
DEG	DEGREE
DIA	DIAMETER
EA	EXHAUST AIR
EAT	ENTERING AIR TEMPERATURE
EER	ENERGY EFFICIENCY RATIO
EF	EXHAUST FAN
EG	EXHAUST GRILLE
EJ	EXPANSION JOINT
ESP	EXTERNAL STATIC PRESSURE
ETR	EXISTING TO REMAIN
EWT	ENTERING WATER TEMPERATURE
EX.	EXISTING
F	FAHRENHEIT
F/SDPR	COMBINATION FIRE SMOKE DAMPER
FA	FREE AREA
FC	FLEXIBLE CONNECTION
FD	FIRE DAMPER
FPM	FEET PER MINUTE
FPS	FEET PER SECOND
FTR	FIN TUBE RADIATION
FV	FACE VELOCITY
GPM	GALLONS PER MINUTE
HC	HEATING COIL
HP	HORSEPOWER
HRP	HYDRONIC RADIANT (CEILING) PANEL
HWC	HOT WATER COIL
HWR	HEATING HOT WATER RETURN
HWS	HEATING HOT WATER SUPPLY
HZ	HERTZ
I/O	INPUT/OUTPUT
IAQ	INDOOR AIR QUALITY
ICF	IN-LINE CENTRIFUGAL FAN
IN WC	INCH WATER COLUMN
IN WG	INCH WATER GAUGE
IN-LB	INCH-POUND
KG	KILOGRAM
KPA	KILOPASCAL
KW	KILOWATT
KWH	KILOWATT HOUR
L/s	LITERS PER SECOND
LAT	LEAVING AIR TEMPERATURE
LH	LATENT HEAT
LSD	LINEAR SLOT DIFFUSER
LWT	LEAVING WATER TEMPERATURE
M	METER
MAU	MAKE-UP AIR UNIT
MAV	MANUAL AIR VENT
MAX	MAXIMUM
MBH	1000 BTUH
MIN	MINIMUM
MM	MILLIMETER
NA	NOT APPLICABLE
NC	NOISE CRITERIA
NTS	NOT TO SCALE
OA	OUTSIDE AIR
OR	OPERATING ROOM
P	PUMP
PA	PASCAL
PD	PRESSURE DROP
PG	PRESSURE GAGE
PRV	PRESSURE REGULATING VALVE
PSI	POUNDS PER SQUARE INCH
PSIG	POUNDS PER SQUARE INCH - GAGE
RA	RETURN AIR
RG	RETURN GRILLE
RH	RELATIVE HUMIDITY
RHC	REHEAT COIL
RHG	REFRIGERANT HOT GAS
RL	REFRIGERANT LIQUID LINE
RPM	REVOLUTIONS PER MINUTE
RS	REFRIGERANT SUCTION
SA	SUPPLY AIR
SAT	SUPPLY AIR TEMPERATURE
SD	SMOKE DETECTOR
SD	SUPPLY AIR DIFFUSER
SDPR	SMOKE DAMPER
SG	SUPPLY AIR GRILLE
SP	STATIC PRESSURE
T & PCV	TEMPERATURE AND PRESSURE CONTROL VALVE
TAB	TESTING, ADJUSTING, BALANCE
TD	TEMPERATURE DIFFERENCE
TG	TRANSFER GRILLE
TSTAT	THERMOSTAT
TU	TERMINAL UNIT
TXV	THERMOSTATIC EXPANSION VALVE
VAV	VARIABLE AIR VOLUME
VD	VOLUME DAMPER (MANUAL OPPOSED BLADE)
VFD	VARIABLE FREQUENCY DRIVE
VI	VIBRATION ISOLATOR
VIV	VARIABLE INLET VANES
Wb	WET-BULB (TEMPERATURE)

GENERAL MECHANICAL COORDINATION NOTES

THE MECHANICAL CONTRACTOR SHALL:

1. PRIOR TO COMMENCING WORK, ESTABLISH THE EXISTING PERFORMANCE OF EXISTING AHU AND EF.
2. PROVIDE INSTALLATION TRADE COORDINATION AND GENERAL ARRANGEMENT DRAWINGS INDICATING MECHANICAL EQUIPMENT AND SYSTEM INSTALLATION IN ACCORDANCE WITH ARCHITECTURAL PLANS AND ALLOWING FOR INSTALLATION OF OTHER TRADES.
   a. INSTALLATION TRADE COORDINATION DRAWINGS SHALL BE TO SCALE (MINIMUM 1/4"=1'), DIMENSIONED DRAWINGS, CLEARLY SHOWING HOW MECHANICAL EQUIPMENT, DUCTWORK, AND PIPING ARE PLANNED TO BE INSTALLED WHILE TAKING ACCOUNT THE WORK OF OTHER TRADES – PLUMBING, ELECTRICAL POWER AND LIGHTING, FIRE PROTECTION, GENERAL CONSTRUCTION AND OTHERS, AND CLEARLY SHOWING STRUCTURAL COMPONENTS AND FIXED BUILDING FEATURES THAT MUST BE ADDRESSED DURING INSTALLATION.
3. REVIEW TRADE COORDINATION PLANS WITH ENGINEER AND OWNER (COR) PRIOR TO ORDERING EQUIPMENT, FABRICATING DUCTWORK OR PIPE, AND PRIOR TO ANY INSTALLATION WORK.

TIE INS:

1. BUILDING SYSTEMS AND EQUIPMENT SERVING AREAS OF THE BUILDING WHICH REMAIN OCCUPIED DURING CONSTRUCTION MUST REMAIN IN OPERATION AND SHALL NOT BE AFFECTED BY CONSTRUCTION WORK.
2. COORDINATE ALL WORK ON SYSTEMS INTENDED TO REMAIN IN SERVICE DURING CONSTRUCTION WITH THE OWNER (COR) AND OTHER TRADES.
3. COORDINATE TIE INS TO EXISTING BUILDING SYSTEMS WITH OWNER (COR) AND OTHER TRADES
4. PLAN WORK TO MINIMIZE DISRUPTION TO CONTINUING OPERATION OF THE BUILDING.

DRAWING SYMBOLS

- 2 — DETAIL NUMBER
- M.500 — DRAWING NUMBER WHERE DRAWN
- A — SECTION LETTER
- H7 — DRAWING NUMBER WHERE SHOWN
- 26–SF 3:
  - BUILDING NO. WHERE EQUIPMENT IS LOCATED.
  - EQUIPMENT ABBREVIATION (SUPPLY FAN)
  - SUPPLY FAN NO. 3 IN BUILDING NO. 26
  - TYPICAL UNIT NO.
- 26–TU–I–I:
  - BUILDING NO. WHERE EQUIPMENT IS LOCATED
  - ITEM (TERMINAL UNIT SHOWN)
  - ITEM NUMBER (TERMINAL UNIT NO. 1)
  - SERVED BY AIR HANDLER UNIT NO. 1

VALVE SYMBOLS

- GATE VALVE – THREADED/FLANGED
- GLOBE VALVE – THREADED/FLANGED
- GATE VALVE WITH 3/4" HOSE ADAPTER
- CHECK VALVE
- WYE STRAINER (WITH BALL VALVE & HOSE CONNECTION)
- FLEXIBLE CONNECTION
- ANGLE GLOBE VALVE
- BUTTERFLY VALVE
- BALL VALVE
- MODULATING CONTROL VALVE
- MODULATING CONTROL BUTTERFLY VALVE
- TWO POSITION CONTROL VALVE
- THREE-WAY MODULATING CONTROL VALVE
- THREE-WAY TWO POSITION CONTROL VALVE
- PRESSURE REGULATING VALVE
- PRESSURE SAFETY VALVE
- AUTOMATIC BALANCING CONTROL VALVE
- WATER BALANCE DEVICE
- CIRCUIT SETTER VALVE
- GATE VALVE WITH GLOBE-VALVED BYPASS
- PLUG VALVE
- CONTROL VALVE (CV) – FLOAT-OPERATED
- PRESSURE REDUCING VALVE (PRV)
- STRAINER WITH VALVED DRAIN AND QUICK-COUPLE HOSE CONNECTOR
- LC — WATER LEVEL CONTROLLER
- M — FLOW METER

GENERAL PIPING SYMBOLS

- DIRECTION OF PIPE PITCH (DOWN)
- DIRECTION OF FLOW
- ANCHOR
- REDUCER OR INCREASER
- ECCENTRIC REDUCER
- TOP CONNECTION, 45° OR 90°
- BOTTOM CONNECTION, 45° OR 90°
- SIDE CONNECTION
- CAPPED OUTLET
- RISE OR DROP IN PIPE
- UNION
- PIPE UP
- PIPE DOWN
- POINT OF CONNECTION BETWEEN NEW AND EXISTING WORK
- LIMIT OF DEMOLITION
- INVERTED BUCKET TRAP SET INCLUDING PIPING ACCESSORIES
- FLOAT & THERMOSTATIC TRAP SET INCLUDING PIPING ACCESSORIES
- THERMOSTATIC TRAP SET INCLUDING PIPING ACCESSORIES
- THERMOMETER
- PRESSURE GAGE
- FE — FLOW ELEMENT
- REFRIGERANT SIGHT GLASS
- TEST PLUG (PRESSURE/TEMPERATURE)
- AV — AUTOMATIC AIR VENT
- MV — MANUAL AIR VENT
- POINT OF CONNECTION BETWEEN NEW AND EXISTING WORK
- T — THERMOSTAT
- PRIMARY ELEMENT FOR FLOW METERING
- QUICK-COUPLE HOSE CONNECTOR
- INVERTED BUCKET STEAM TRAP ASSEMBLY (T)
- CLOSED-FLOAT-THERMOSTATIC STEAM TRAP ASSEMBLY (T)
- THERMOSTATIC STEAM TRAP (T)
- PRESSURE GAGE (WITH SIPHON ON STEAM SERVICE)

AIR TERMINAL SYMBOLS

- TERMINAL UNIT WITH REHEAT COIL

TERMINAL UNIT SYMBOLS

- UNIT HEATER (HORIZONTAL)

DUCTWORK SYMBOLS

- UP / DN — SUPPLY DUCT (UP & DOWN)
- UP / DN — EXHAUST DUCT (UP & DOWN)
- UP / DN — RETURN DUCT (UP & DOWN)
- ROUND AND SQUARE 4-WAY CEILING DIFFUSERS
- SQUARE 3-WAY CEILING DIFFUSERS
- SQUARE 2-WAY CEILING DIFFUSERS
- SQUARE 1-WAY CEILING DIFFUSERS
- LINEAR SLOT DIFFUSER
- SUPPLY TOP REGISTER OR GRILLE (WALL TYPE)
- EXHAUST OR RETURN CEILING REGISTER OR GRILLE
- EXHAUST OR RETURN BOTTOM REGISTER OR GRILLE (WALL TYPE)
- EXHAUST OR RETURN REGISTER OR TOP GRILLE (WALL TYPE)
- VANED ELBOW & AIR SPLIT TYPE DUCT TAKE-OFF
- CONNECT NEW DUCT TO EXISTING DUCT
- R — INCLINED RISE, IN DIRECTION OF AIR FLOW
- D — INCLINED DROP, IN DIRECTION OF AIR FLOW
- LIMIT OF DEMOLITION
- FC — FLEXIBLE CONNECTION, EQUIPMENT, VIBRATION, OR SEISMIC
- VANED ELBOW (PROVIDE ALL SQUARE OR RECTANGULAR ELBOWS WITH VANES EVEN IF SYMBOL IS MISSING)
- VANED ELBOW (SHORT RADIUS)
- STANDARD RADIUS ELBOW (LONG RADIUS)
- 10x8 — NEW DUCT (INSIDE DIMENSIONS: WIDTH x DEPTH)
- EXISTING DUCT TO REMAIN
- EXISTING DUCT TO BE REMOVED
- LOUVER (LOUVER SPECIFIED IN ARCHITECTURAL SECTION.)
- FLEXIBLE DUCTWORK (INSULATED)
- DUCT WITH SOUND LINING
- VD — MANUAL VOLUME DAMPER
- FD — FIRE DAMPER
- BDD — BACK DRAFT DAMPER
- F/S DPR, N — COMBINATION FIRE/SMOKE DAMPER
- 2 1, 4, 1/2 — POINT OF CHANGE IN DUCT CONSTRUCTION BY STATIC PRESSURE CLASS. THE NUMBER ASSIGNS PRESSURE CLASS (IN. OF WATER) WHICH WILL ACCOMMODATE MAXIMUM OPERATING PRESSURE IN THE DUCT SUBSECTION. THE SYMBOL CONTINUES THE ASSIGNMENT UNTIL THE DUCT TERMINATES OR ANOTHER SYMBOL APPEARS. A "N" SUPERSCRIPT INDICATES NEGATIVE PRESSURE.
- AUTOMATIC CONTROL DAMPER MODULATING
- AUTOMATIC CONTROL DAMPER TWO POSITION
- STAINLESS STEEL DUCT
- MANUAL SPLITTER DAMPER
- 45° SUPPLY / 45° RETURN — STANDARD BRANCH SUPPLY OR RETURN, NO SPLITTER (45° TAP)
- DUCT MOUNTED COIL (HOT WATER OR STEAM COIL)
- DUCT MOUNTED COIL (ELECTRIC)

STEAM PIPING LINETYPES

LINETYPE	DESCRIPTION
—— LPS ——	LOW PRESSURE STEAM
– – – LPR – – –	LOW PRESSURE CONDENSATE
—— MPS ——	MEDIUM PRESSURE STEAM
– – – MPR – – –	MEDIUM PRESSURE CONDENSATE
—— LPS ——	LOW PRESSURE STEAM
—— LPR ——	LOW PRESSURE CONDENSATE
—— MPS ——	MEDIUM PRESSURE STEAM
—— MPR ——	MEDIUM PRESSURE CONDENSATE
————	PUMPED CONDENSATE
—— RL ——	REFRIGERANT LIQUID
—— RS ——	REFRIGERANT SUCTION
—— RHG ——	REFRIGERANT HOT GAS
— — — — —	EXISTING PIPING TO BE REMOVED
————	NEW PIPING

HEATING SYSTEM LINETYPES

LINETYPE	DESCRIPTION
—— HWS ——	HOT WATER HEATING SUPPLY
– – – HWR – – –	HOT WATER HEATING RETURN
—— GHS ——	GLYCOL HEATING SUPPLY
—— — GHR ——	GLYCOL HEATING RETURN
— — — — —	EXISTING PIPING TO BE REMOVED
————	NEW PIPING

MECHANICAL SHEET INDEX

M-452-0.1	MECHANICAL GENERAL NOTES, SYMBOLS AND ABBREVIATIONS
M-452-1.1	MECHANICAL DUCTWORK DEMOLITION PLAN
M-452-1.2	MECHANICAL PIPING DEMOLITION PLAN
M-452-2.1	MECHANICAL DUCTWORK NEW PLAN
M-452-2.2	MECHANICAL PIPING NEW PLAN
M-452-2.3	MECHANICAL ROOF DEMOLITION AND NEW PLAN
M-452-3.1	MECHANICAL DUCTWORK DETAILS
M-452-3.2	MECHANICAL STEAM PIPING DETAILS
M-452-3.3	MECHANICAL WATER & REFRIGERANT PIPING DETAILS
M-452-3.4	MECHANICAL CONTROL DETAILS
M-452-3.5	MECHANICAL CONTROL DETAILS
M-452-4.1	MECHANICAL SCHEDULES
M-452-4.2	MECHANICAL SCHEDULES
M-452-4.3	MECHANICAL SCHEDULES

FULLY SPRINKLED

Revisions: | Date

CONSULTANTS:

MEP ASSOCIATES, LLC
engineers | consultants | commissioning
MEP Associates, LLC | 2720 Arbor Court | Eau Claire, WI 54701
Phone: 715.832.5680 | Fax: 715.832.5668 | www.mepassociates.com
MEP PROJECT NO.: A18.13.07

ARCHITECT/ENGINEERS:

ANDERSON ENGINEERING
ENGINEERING • ARCHITECTURE • LAND SURVEYING
ENVIRONMENTAL SERVICES • LANDSCAPE ARCHITECTURE

Anderson Engineering of Minnesota, LLC
13605 1st Avenue North
Suite 100
Plymouth, MN 55441
763-412-4000 (o) 763-412-4090 (f)
www.ae-mn.com

Drawing Title: MECHANICAL GENERAL NOTES, SYMBOLS AND ABBREVIATIONS

Approved: Project Director

Project Title: CORRECT GAP DEFICIENCIES AT SPS

Location: VA MEDICAL CENTER TOMAH WI

Date: 12-17-2013 | Checked: JAM | Drawn: CMW

Project Number: 676-13-106

Building Number: 452

Drawing Number: M-452-0.1

Dwg. 11 of 27

Office of Construction and Facilities Management

Department of Veterans Affairs

PRINTED: 9/12/2013 FILE: I:\(A18) Anderson Engineering of Minnesota, LLC\A18.13.07 VA Tomah Correct Gap Deficiencies\03-CAD Drawings\M-452-0.1 MECH TITLE SHEET.dwg

DUCT DEMOLITION KEYED NOTES

1. REMOVE DUCTWORK WHERE INDICATED DASHED AND BOLD.
2. REMOVE AND DISPOSE OF AIR COOLED CONDENSING UNIT AND ASSOCIATED REFRIGERANT PIPING AND SPECIALTIES. CAPTURE AND DISPOSE OF REFRIGERANT IN ACCORDANCE WITH ALL REGULATIONS. DOCUMENT TYPE OF REFRIGERANT, QUANTITY, DATE OF DISPOSAL, MANNER OF DISPOSAL, AND DISPOSAL COMPANY NAME, ADDRESS, PHONE NUMBER, AND CONTACT. PROVIDE DOCUMENTATION WITH COR.
3. REMOVE AND DISPOSE OF AIR HANDLING UNIT COMPONENTS; FAN, DX COOLING COIL, INTEGRAL FACE AND BYPASS STEAM PREHEAT COIL, PREFILTER, FINAL FILTER. ALSO REMOVE INTERCONNECTING DUCTWORK BETWEEN COMPONENTS.
4. REMOVE STANDS FOR AIR HANDLING UNIT EQUIPMENT.
5. DUCT CONNECTED TO CAVITY SPACE BEHIND STERILIZERS TO REMAIN.
6. REMOVE GRILLE, SAVE FOR REUSE.

MECHANICAL WORK NOTE – DUCTWORK:

PRIOR TO BEGINNING CONSTRUCTION, MEASURE AND DOCUMENT WATER FLOWS AND PUMP PERFORMANCE OF HEAT WATER SYSTEM. INCLUDE MEASUREMENTS OF ALL COIL WATER FLOWS AND PRESSURE DROPS, STEAM TO HOT WATER FLOW AND PRESSURE DROP, PUMP PERFORMANCE, INCLUDING MOTOR LOAD. PROVIDE DOCUMENTATION TO COR.

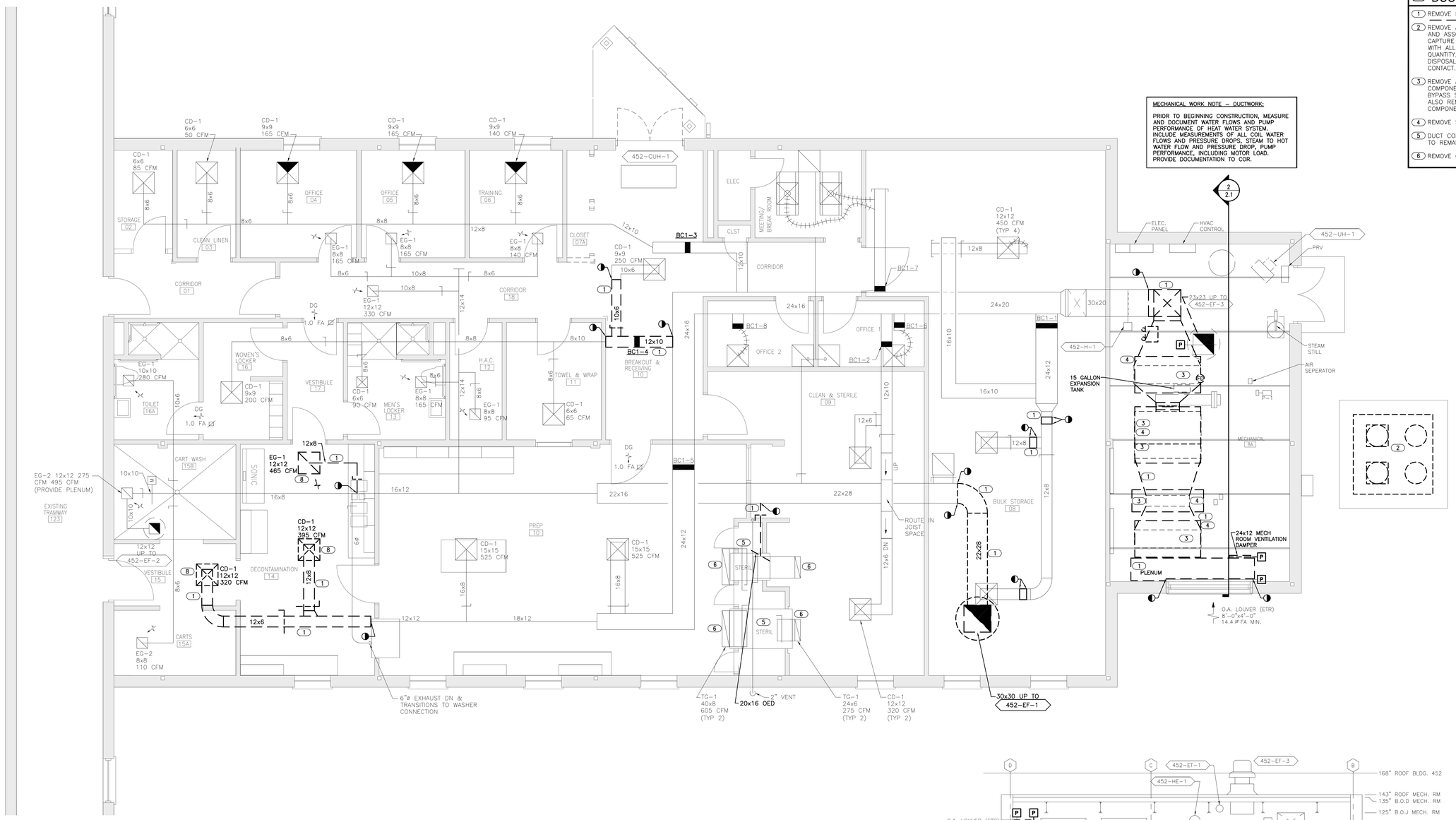

1 MECHANICAL DUCTWORK PLAN - DEMO

1/4" = 1'-0"

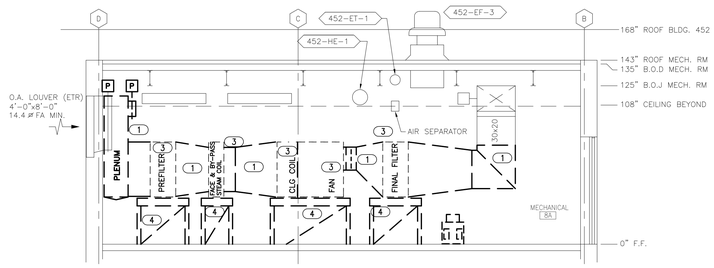

2 SECTION VIEW DUCTWORK - DEMO

1/4" = 1'-0"

KEYPLAN

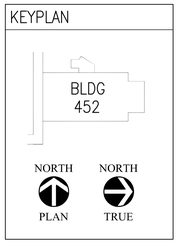

FULLY SPRINKLED

Revisions:	Date

CONSULTANTS:

MEP ASSOCIATES, LLC
engineers | consultants | commissioning
MEP Associates, LLC | 2720 Arbor Court | Eau Claire, WI 54701
Phone: 715.832.5680 | Fax: 715.832.5668 | www.mepassociates.com
MEP PROJECT NO.: A18.13.07

ARCHITECT/ENGINEERS:

ANDERSON ENGINEERING
ENGINEERING • ARCHITECTURE • LAND SURVEYING
ENVIRONMENTAL SERVICES • LANDSCAPE ARCHITECTURE

Anderson Engineering of Minnesota, LLC
13605 1st Avenue North
Suite 100
Plymouth, MN 55441
763-412-4000 (o) 763-412-4090 (f)
www.ae-mn.com

Drawing Title: MECHANICAL DUCTWORK DEMOLITION	Project Title: CORRECT GAP DEFICIENCIES AT SPS		Project Number: 676-13-106
			Building Number: 452
Approved: Project Director	Location: VA MEDICAL CENTER TOMAH WI		Drawing Number: M-452-1.1
	Date: 12-17-2013	Checked: JAM	Drawn: CMW
			Dwg. 12 of 27

Office of Construction and Facilities Management
Department of Veterans Affairs

VA FORM 08-6231 (MAR 2012)

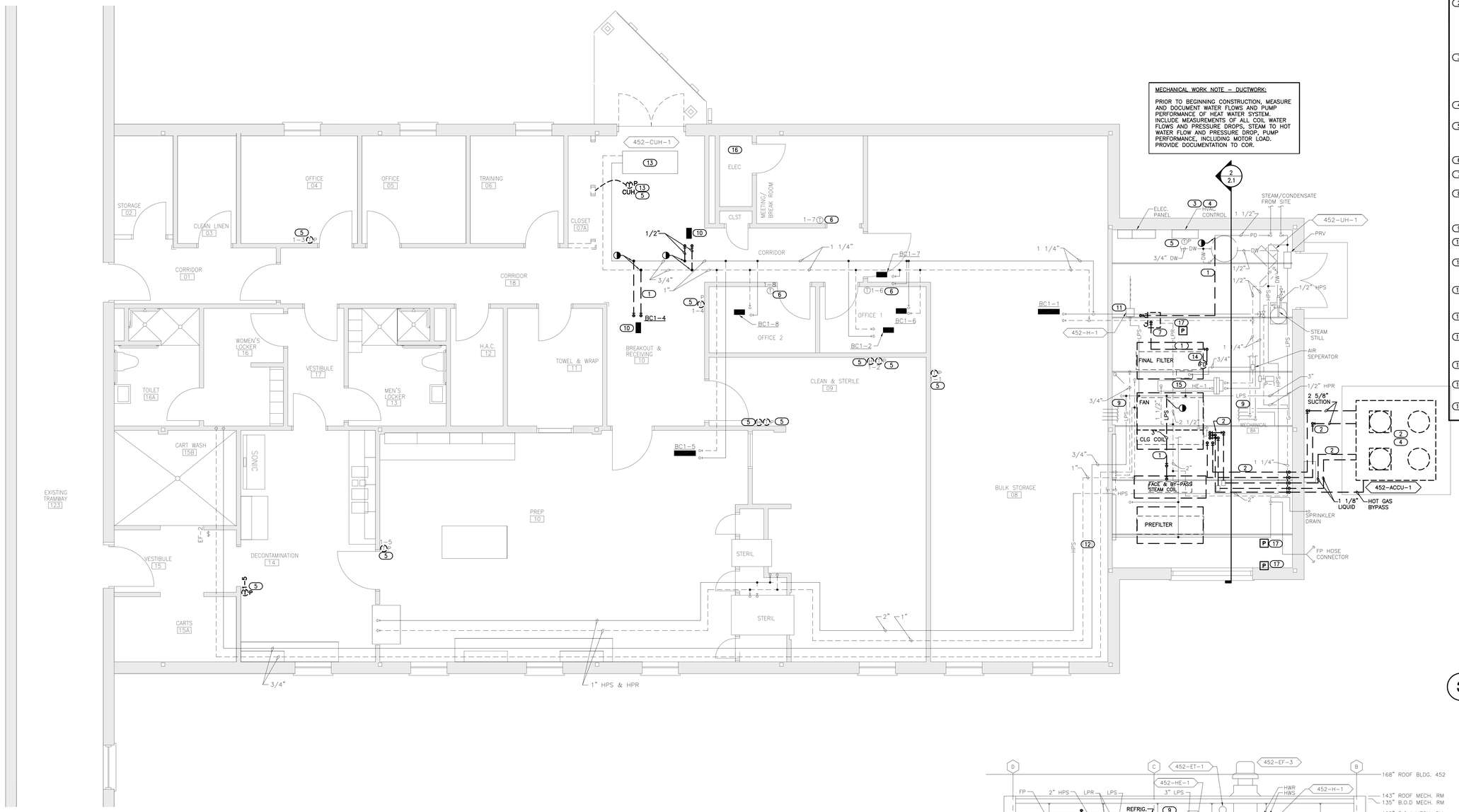

1 MECHANICAL PIPING PLAN - DEMO

1/4" = 1'-0"

MECHANICAL WORK NOTE – DUCTWORK:

PRIOR TO BEGINNING CONSTRUCTION, MEASURE AND DOCUMENT WATER FLOWS AND PUMP PERFORMANCE OF HEAT WATER SYSTEM. INCLUDE MEASUREMENTS OF ALL COIL WATER FLOWS AND PRESSURE DROPS, STEAM TO HOT WATER FLOW AND PRESSURE DROP, PUMP PERFORMANCE, INCLUDING MOTOR LOAD. PROVIDE DOCUMENTATION TO COR.

PIPING DEMOLITION KEYED NOTES

1. REMOVE PIPING WHERE INDICATED BOLD AND DASHED.
2. REMOVE AND DISPOSE OF AIR COOLED CONDENSING UNIT AND ASSOCIATED REFRIGERANT PIPING AND SPECIALTIES. CAPTURE AND DISPOSE OF REFRIGERANT IN ACCORDANCE WITH ALL REGULATIONS. DOCUMENT TYPE OF REFRIGERANT, QUANTITY, DATE OF DISPOSAL, MANNER OF DISPOSAL, AND DISPOSAL COMPANY NAME, ADDRESS, PHONE NUMBER, AND CONTACT. PROVIDE DOCUMENTATION WITH COR.
3. DISCONNECT AND REMOVE CONTROLS FOR AIR HANDLING UNIT, INCLUDING SUPPLY FAN VFD, STEAM PREHEAT COIL WITH INTEGRAL FACE AND BYPASS, DX COIL, AND FILTER DIFFERENTIAL PRESSURE SENSORS. REMOVE ALL CONNECTED PIPING BACK TO MAIN, OR ENTIRELY IF CONNECTED TO OTHER EQUIPMENT BEING REMOVED.
4. DISCONNECT AND REMOVE CONTROLS FOR AIR COOLED CONDENSING UNIT.
5. DISCONNECT, REMOVE, AND DISPOSE OF THERMOSTAT AND HUMIDISTAT. TSTAT SYMBOLS WITH P ADJACENT INDICATES PNEUMATIC STYLE. IF NOT BEING REPLACED FILL IN AND PATCH/REPAIR WALL TO MATCH EXISTING.
6. EXISTING ELECTRONIC THERMOSTAT, REUSE IF POSSIBLE.
7. REMOVE CONDENSATE RECEIVER / PUMP UNIT, SAVE FOR REINSTALLATION.
8. FIRE PROTECTION SPRINKLER PIPING, REMOVE PIPING AND DROPS TO PIPING BENEATH ELEVATED AIR HANDLING UNIT AND OTHER PIPING AS REQUIRED TO PROVIDE SPACE FOR NEW INSTALLATIONS.
9. PLUMBING PIPES AT ABOUT 122" AFF.
10. REMOVE AND DISPOSE OF BOOSTER COIL AND ASSOCIATED PIPING, VALVES, CONTROLS, SPECIALTIES.
11. EXISTING HUMIDIFIER DISPERSION TUBE TO REMAIN, REMOVE AND DISPOSE OF HUMIDIFIER TRAPS, REMOVE AND DISPOSE OF CONTROL VALVES AND ACTUATORS.
12. AS NECESSARY, REWORK AND REROUTE PIPING IN THIS AREA TO PROVIDE SPACE FOR REROUTED DUCTWORK TO MECHANICAL ROOM.
13. REMOVE AND DISPOSE OF THERMOSTAT AND OTHER CONTROLS FOR CABINET UNIT HEATER.
14. REMOVE FLOOR DRAIN, SAW CUT FLOOR AND REMOVE DRAIN PIPE TO MAIN, TO BE EXTENDED TO NEW FLOOR DRAIN LOCATION.
15. REMOVE AND DISPOSE OF CONTROLS AND STEAM TRAP FOR STEAM TO HOT WATER CONVERTER.
16. DDC SYSTEM INTERFACE WITH CAMPUS NETWORK (JCI NADE) IN ELECTRICAL ROOM.
17. DISCONNECT, REMOVE, AND DISPOSE OF PNEUMATIC DAMPER ACTUATOR.

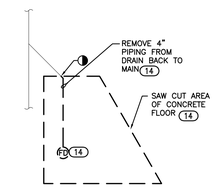

3 FLOOR DRAIN DEMO

1/4" = 1'-0"

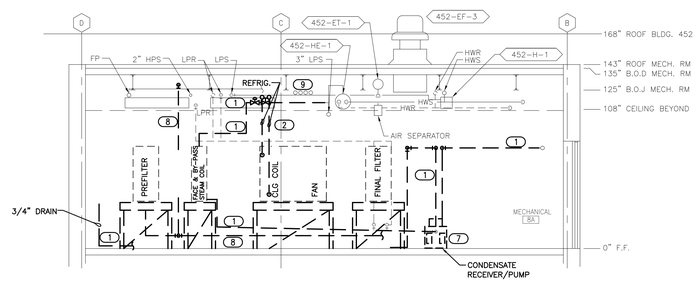

2 SECTION VIEW PIPING - DEMO

1/4" = 1'-0"

KEYPLAN

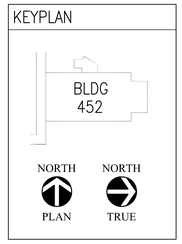

FULLY SPRINKLED

Revisions:	Date

CONSULTANTS:

MEP ASSOCIATES, LLC
engineers | consultants | commissioning
MEP Associates, LLC | 2720 Arbor Court | Eau Claire, WI 54701
Phone: 715.832.5680 | Fax: 715.832.5668 | www.mepassociates.com
MEP PROJECT NO.: A18.13.07

ARCHITECT/ENGINEERS:

ANDERSON ENGINEERING
ENGINEERING • ARCHITECTURE • LAND SURVEYING
ENVIRONMENTAL SERVICES • LANDSCAPE ARCHITECTURE

Anderson Engineering of Minnesota, LLC
13605 1st Avenue North
Suite 100
Plymouth, MN 55441
763-412-4000 (o) 763-412-4090 (f)
www.ae-mn.com

Drawing Title: MECHANICAL PIPING DEMOLITION

Approved Project Director:

Project Title: CORRECT GAP DEFICIENCIES AT SPS

Location: VA MEDICAL CENTER TOMAH WI

Date	Checked	Drawn
12-17-2013	JAM	CMW

Project Number: 676-13-106

Building Number: 452

Drawing Number: M-452-1.2

Dwg. 13 of 27

Office of Construction and Facilities Management

Department of Veterans Affairs

VA FORM 08-6231 (MAR 2012)

PLOTTED: 12/17/2013 FILE: U:\676 Veterans Engineering of Minnesota, LLC\A18.13.07 VA Tomah General Site Improvements\M-452-1.2 MECH DEMO & PIPING DEMO TOMAH.dwg

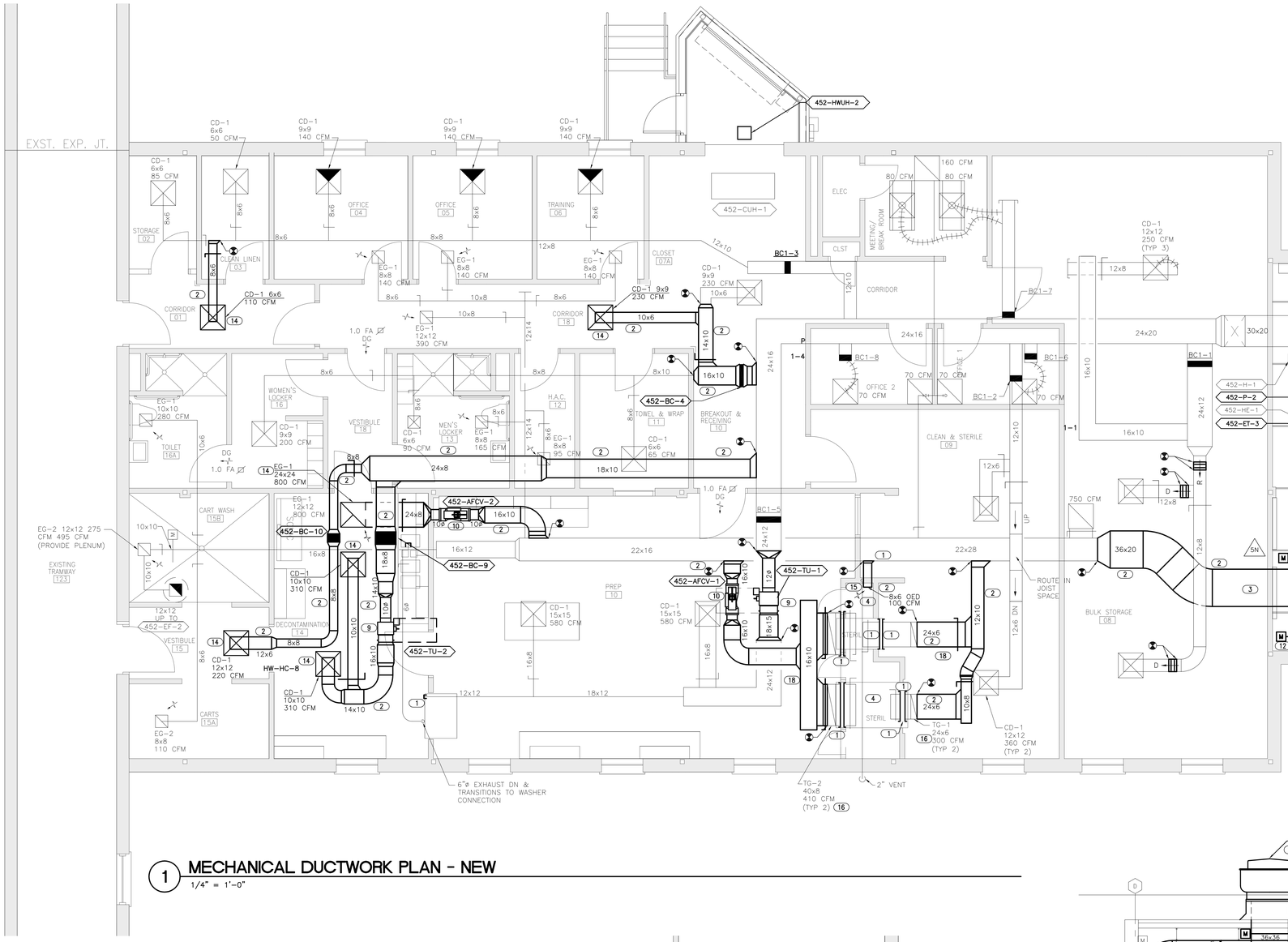

1 MECHANICAL DUCTWORK PLAN - NEW

1/4" = 1'-0"

MECHANICAL WORK NOTE – DUCTWORK:

1. LEAK TEST AIR SYSTEM PER SPECIFICATIONS.
2. TEST AND BALANCE ENTIRE AIR SYSTEM.
3. INSULATE NEW WORK PER SPECIFICATIONS, PAY PARTICULAR CARE IN SEALING AND PROVIDING CONTINUOUS VAPOR BARRIER WHERE NEW DUCTWORK CONNECT WITH EXISTING.

DUCTWORK KEYED NOTES

1. CAP, SEAL, AND INSULATE (WHERE REQUIRED) BRANCH CONNECTION WHERE DUCT REMOVED. LEAK TEST AND INSULATE PER SPECIFICATIONS FOR NEW INSTALLATIONS.
2. PROVIDE NEW DUCTWORK WHERE INDICATED BOLD. MEDIUM PRESSURE DUCTWORK BETWEEN HEAT RECOVERY UNIT AND EXHAUST FAN.
3. PROVIDE NEW SAW CUT WALL OPENING FOR DUCTWORK, SEAL OPENING TO DUCTWORK PER SPECIFICATIONS.
4. CHECK INTEGRITY OF WALL SURROUNDING STERILIZER SPACE. AS NECESSARY FILL OPENINGS, HOLES, AND CRACKS, AND RESEAL TO SEAL TO ROOF DECK, WALLS, FLOOR, ETC. SEAL DUCTWORK TO WALLS.
5. PROVIDE NEW AIR COOLED CONDENSING UNIT WITH FACTORY ISOLATORS AND ASSOCIATED REFRIGERANT PIPING AND SPECIALTIES.
6. PROVIDE NEW AIR HANDLING UNIT.
7. PROVIDE 4" HOUSEKEEPING PAD FOR AIR HANDLING UNIT AND AIR TO AIR HEAT RECOVERY UNIT. VERIFY WITH AIR HANDLER MANUFACTURER SUFFICIENT HEIGHT TO PROVIDE PROPER GRAVITY DRAINAGE OF COOLING COIL.
8. PROVIDE NEW AIR TO AIR HEAT RECOVERY UNIT WITH FILTERS. DESIGN, FABRICATE AND DESIGN PLATFORM TO FACILITATE ACCESS FOR TOP ENTRY FILTER CHANGE.
9. PROVIDE NEW VAV BOX.
10. PROVIDE NEW AIR VALVE.
11. PROVIDE NEW EXHAUST FAN.
12. PROVIDE NEW DAMPER WITH ACTUATOR.
13. PROVIDE NEW DAMPER ACTUATOR.
14. PROVIDE NEW GRILLE, REGISTER, AND OR DIFFUSER.
15. INFILL, PATCH, AND REPAIR WALL ABOVE CEILING TO MATCH EXISTING. SEAL WALL TO DUCT.
16. INSTALL GRILLE SALVAGED FROM ORIGINAL INSTALLATION DEMO WORK.
17. PROVIDE DUCT MOUNT HUMIDISTAT IN EXHAUST DUCT, FOR CONTROL.
18. COORDINATE DUCTWORK RELATIVE TO HARD CEILING AND BULKHEAD SUPPORT STUDS. BULKHEAD INTENDED TO CAPTURE AND CONTAIN WARM AIR FROM STERILIZERS DIRECTING TO EXHAUST GRILLES.
19. DESIGN AND FABRICATE PLATFORM WITH LADDER FOR HEAT RECOVERY UNIT TOP ACCESS FILTER CHANGE. SEE DETAILS 3 AND 4 THIS SHEET.
20. PROVIDE NEW DDC CONTROL FOR UNIT HEATER.

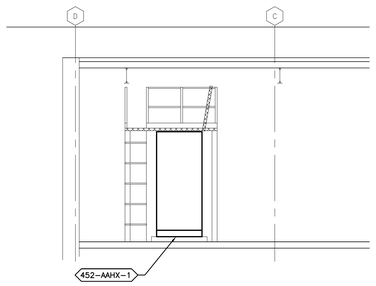

4 PLATFORM ELEV. DETAIL

1/4" = 1'-0"

PLATFORM NOTE:

PROVIDE CONTRACTOR DESIGNED AND FABRICATED ACCESS PLATFORM FOR USE DURING AIR TO AIR HEAT EXCHANGER FILTER CHANGEOUT. INCLUDE LADDER ACCESS TO PLATFORM. PLATFORM TO INCLUDE HINGED ALUMINUM GRATING PANELS ABOVE AIR TO AIR HEAT EXCHANGER REMOVABLE PANELS FOR FILTER ACCESS, RAILINGS, AND 4" HIGH TOE BOARDS. ALL STEEL ELEMENTS TO BE GALVANIZED.

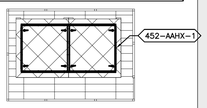

3 PLATFORM PLAN VIEW DETAIL

1/4" = 1'-0"

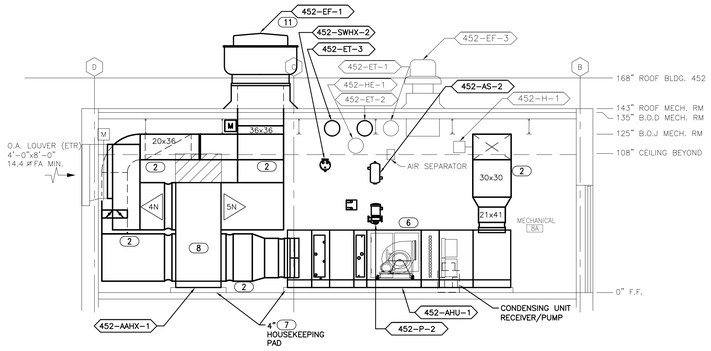

2 SECTION VIEW DUCTWORK - NEW

1/4" = 1'-0"

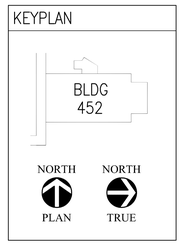

FULLY SPRINKLED

Revisions:	Date

CONSULTANTS:

MEP ASSOCIATES, LLC
engineers | consultants | commissioning
MEP Associates, LLC | 2720 Arbor Court | Eau Claire, WI 54701
Phone: 715.832.5680 | Fax: 715.832.5668 | www.mepassociates.com
MEP PROJECT NO.: A18.13.07

ARCHITECT/ENGINEERS:

ANDERSON ENGINEERING
ENGINEERING • ARCHITECTURE • LAND SURVEYING
ENVIRONMENTAL SERVICES • LANDSCAPE ARCHITECTURE

Anderson Engineering of Minnesota, LLC
13605 1st Avenue North
Suite 100
Plymouth, MN 55441
763-412-4000 (o) 763-412-4090 (f)
www.ae-mn.com

Drawing Title: MECHANICAL DUCTWORK NEW PLAN

Approved: Project Director

Project Title: CORRECT GAP DEFICIENCIES AT SPS

Location: VA MEDICAL CENTER TOMAH WI

Date: 12-17-2013 | Checked: JAM | Drawn: CMW

Project Number: 676-13-106

Building Number: 452

Drawing Number: M-452-2.1

Dwg. 14 of 27

Office of Construction and Facilities Management

Department of Veterans Affairs

VA FORM 08-6231 (MAR 2012)

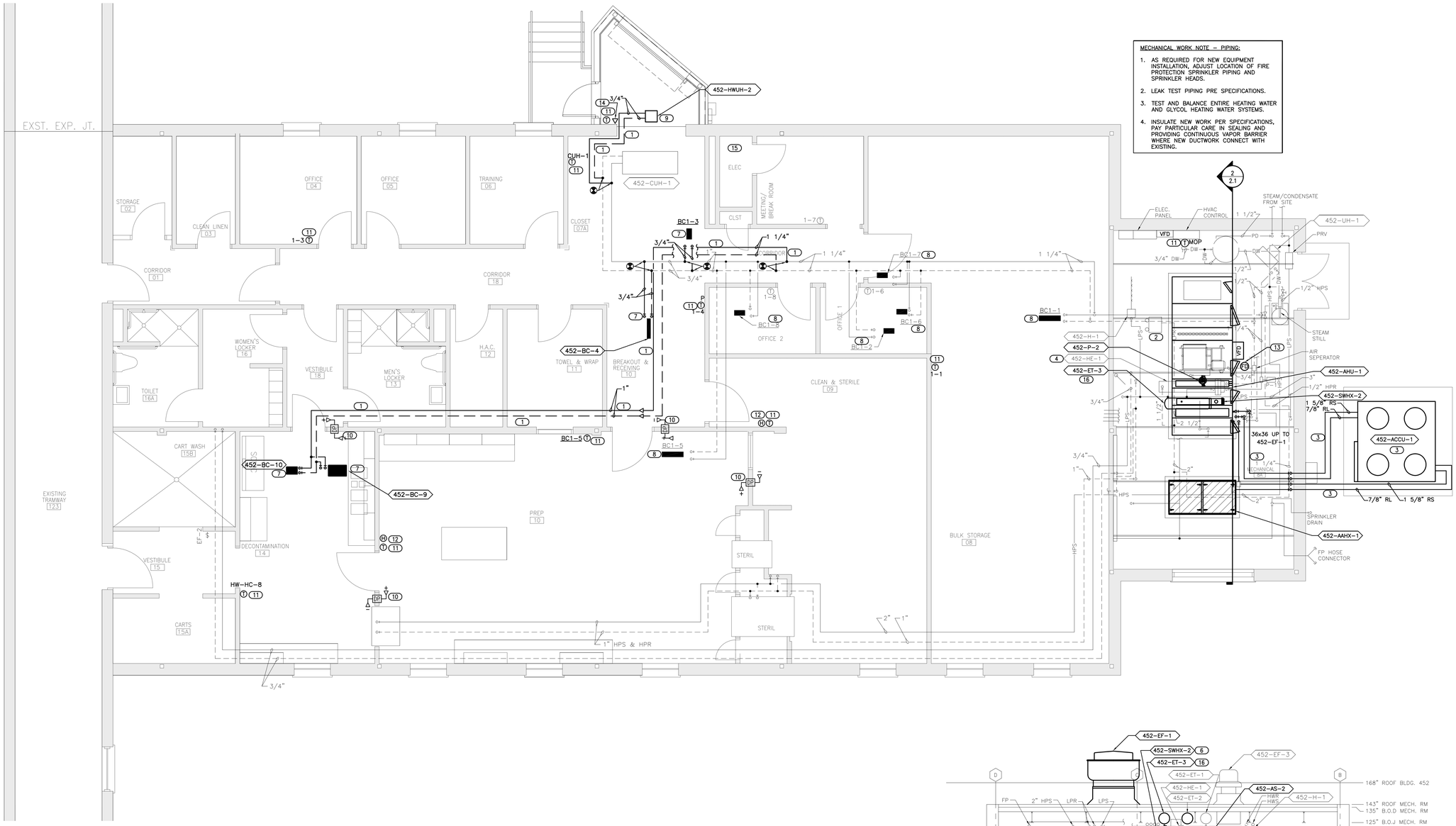

1 MECHANICAL PIPING PLAN - NEW

1/4" = 1'-0"

PIPING KEYED NOTES

1. PROVIDE NEW PIPING WHERE INDICATED AS BOLD; ——— INCLUDING STEAM, CONDENSATE, HEATING WATER, GLYCOL HEATING WATER, AND REFRIGERANT.
2. REINSTALL CONDENSATE RECEIVER / PUMP UNIT, CONNECT TO CONDENSATE AND VENT PIPING.
3. PROVIDE NEW AIR COOLED CONDENSING UNIT WITH FACTORY ISOLATORS AND ASSOCIATED REFRIGERANT PIPING AND SPECIALTIES. PIPE TWO STAGE COOLING LIQUID AND SUCTION LINES TO DX COIL IN AIR HANDLER. REVIEW REFRIGERANT PIPE ROUTING WITH MANUFACTURER TO CONFIRM SIZE. ROUTE DX COIL DRAIN PAN THROUGH TRAP TO FLOOR DRAIN.
4. PROVIDE NEW STEAM CONTROL VALVES AND STEAM TRAP FOR EXISTING STEAM TO HOT WATER CONVERTER.
5. PROVIDE NEW STEAM CONTROL VALVE AND STEAM TRAP FOR EXISTING STEAM HUMIDIFIER.
6. PROVIDE NEW GLYCOL HEATING LOOP FOR AIR HANDLER PREHEAT COIL, INCLUDING STEAM TO FLUID CONVERTER, STEAM TRAP, CIRCULATION PUMP, STEAM CONTROL VALVES (1/3, 2/3), EXPANSION TANK, RELIEF VALVE, AIR SEPARATOR, CHEMICAL FEED POT, AND CONTROLS. ROUTE RELIEF VALVE AND AIR VENT PIPING TO FLOOR DRAIN.
7. PROVIDE NEW BOOSTER HEATING COIL, REWORK AND EXTEND HEATING WATER PIPING AS REQUIRED.
8. PROVIDE NEW COIL CONTROL VALVE WITH DDC ACTUATOR.
9. PROVIDE NEW HORIZONTAL AIR DELIVERY HOT WATER UNIT HEATER, EXTEND HEATING WATER PIPING AS REQUIRED.
10. PROVIDE ROOM DIFFERENTIAL PRESSURE / AIRFLOW INDICATOR, BALL IN TUBE TYPE.
11. PROVIDE NEW THERMOSTAT.
12. PROVIDE NEW HUMIDITY SENSOR.
13. INSTALL NEW FLOOR DRAIN, EXTEND EXISTING DRAIN PIPING AS REQUIRED. PATCH AND REPAIR FLOOR TO MATCH EXISTING.
14. EXTEND FIRE PROTECTION SPRINKLER BRANCH PIPING THROUGH WALL TO SIDE MOUNT SPRINKLER HEAD MOUNTED ON WALL.
15. DDC SYSTEM INTERFACE WITH CAMPUS NETWORK (JCI NADE) IN ELECTRICAL ROOM.
16. PROVIDE NEW EXPANSION TANK FOR HEATING WATER SYSTEM, SAME SIZE AS EXISTING, PIPED IN PARALLEL WITH EXISTING.

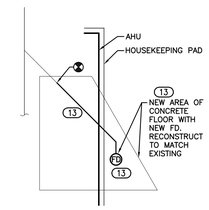

3 FLOOR DRAIN

1/4" = 1'-0"

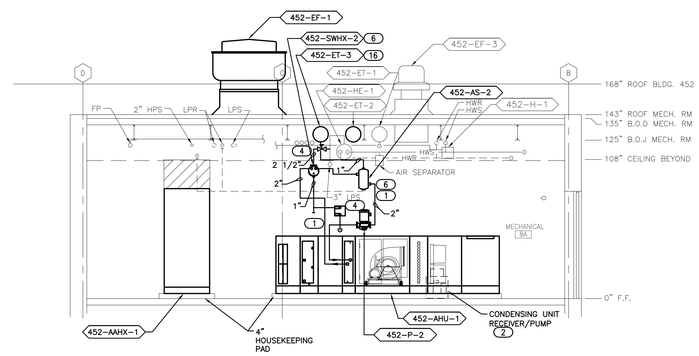

2 SECTION VIEW PIPING - NEW

1/4" = 1'-0"

KEYPLAN

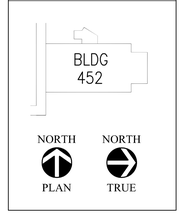

FULLY SPRINKLED

Revisions:	Date

CONSULTANTS:

MEP ASSOCIATES, LLC
engineers | consultants | commissioning
MEP Associates, LLC | 2720 Arbor Court | Eau Claire, WI 54701
Phone: 715.832.5680 | Fax: 715.832.5668 | www.mepassociates.com
MEP PROJECT NO.: A18.13.07

ARCHITECT/ENGINEERS:

ANDERSON ENGINEERING
ENGINEERING • ARCHITECTURE • LAND SURVEYING
ENVIRONMENTAL SERVICES • LANDSCAPE ARCHITECTURE

Anderson Engineering of Minnesota, LLC
13605 1st Avenue North
Suite 100
Plymouth, MN 55441
763-412-4000 (o) 763-412-4090 (f)
www.ae-mn.com

Drawing Title: MECHANICAL PIPING NEW PLAN

Approved Project Director:

Project Title: CORRECT GAP DEFICIENCIES AT SPS

Location: VA MEDICAL CENTER TOMAH WI

Date: 12-17-2013 | Checked: JAM | Drawn: CMW

Project Number: 676-13-106

Building Number: 452

Drawing Number: M-452-2.2

Dwg. 15 of 27

Office of Construction and Facilities Management

Department of Veterans Affairs

VA FORM 08-6231 (MAR 2012)

KEYED NOTES

1. REMOVE AND DISPOSE OF EXHAUST FAN AND ASSOCIATED CONTROLS.
2. REMOVE AND DISPOSE OF AIR COOLED CONDENSING UNIT AND ASSOCIATED REFRIGERANT PIPING AND SPECIALTIES. CAPTURE AND DISPOSE OF REFRIGERANT IN ACCORDANCE WITH ALL REGULATIONS.
3. PROVIDE INSULATED CURB CAP, SEAL WEATHER TIGHT TO CURB.
4. PROVIDE NEW AIR COOLED CONDENSING UNIT.
5. PROVIDE NEW EXHAUST FAN.

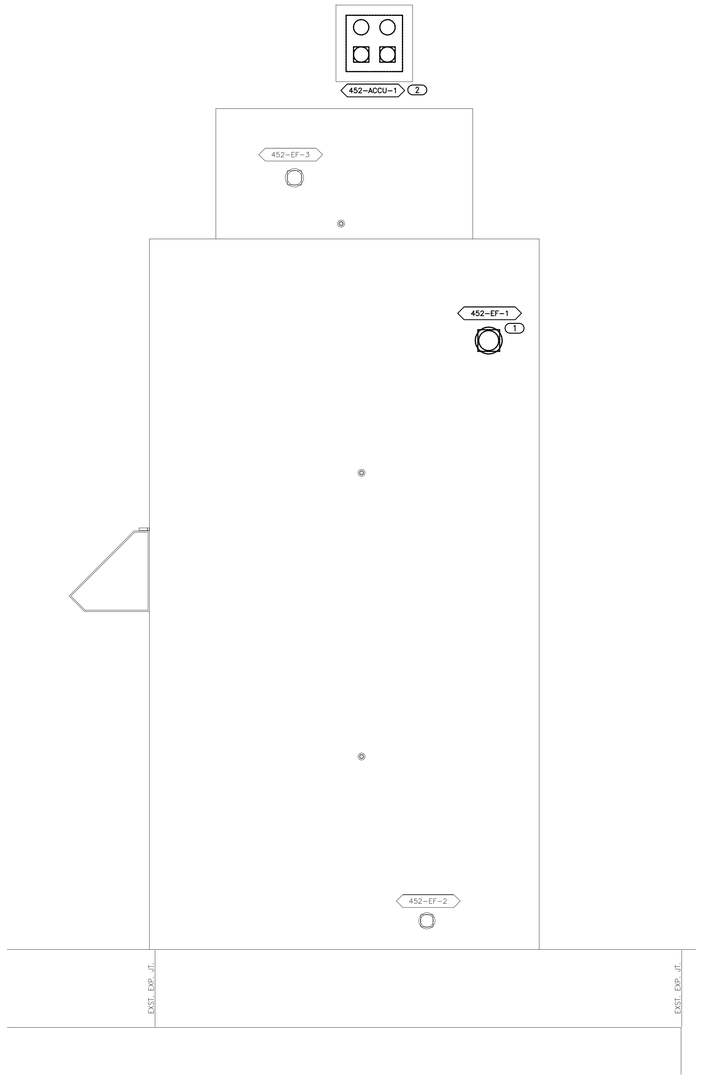

1 MECHANICAL ROOF PLAN - DEMOLITION
1/8" = 1'-0"

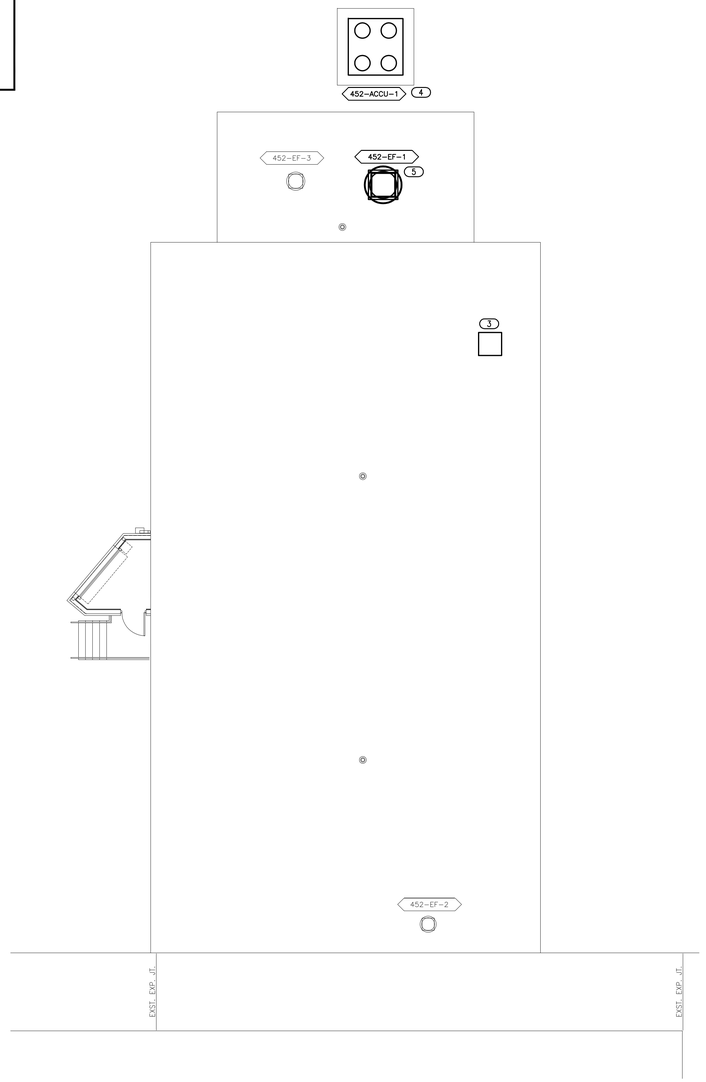

2 MECHANICAL ROOF PLAN - NEW
1/8" = 1'-0"

KEYPLAN

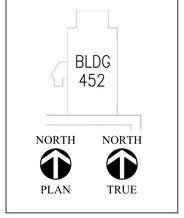

FULLY SPRINKLED

Revisions:	Date

CONSULTANTS:

MEP ASSOCIATES, LLC
engineers | consultants | commissioning
MEP Associates, LLC | 2720 Arbor Court | Eau Claire, WI 54701
Phone: 715.832.5680 | Fax: 715.832.5668 | www.mepassociates.com
MEP PROJECT NO.: A18.13.07

ARCHITECT/ENGINEERS:

ANDERSON ENGINEERING
ENGINEERING • ARCHITECTURE • LAND SURVEYING
ENVIRONMENTAL SERVICES • LANDSCAPE ARCHITECTURE

Anderson Engineering of Minnesota, LLC
13605 1st Avenue North
Suite 100
Plymouth, MN 55441
763-412-4000 (o) 763-412-4090 (f)
www.ae-mn.com

Drawing Title	Project Title	Project Number
MECH. ROOF DEMOLITION AND NEW	CORRECT GAP DEFICIENCIES AT SPS	676-13-106
Approved: Project Director	Location: VA MEDICAL CENTER TOMAH WI	Building Number: 452
	Date: 12-17-2013 / Checked: JAM / Drawn: CMW	Drawing Number: M-452-2.3 Dwg. 16 of 27

Office of Construction and Facilities Management
Department of Veterans Affairs

VA FORM 08-6231 (MAR 2012)

PRINTED: 10/7/2013 FILE: U:\676 Anderson Engineering of Minnesota, LLC\A18.13.07 - VA Tomah Correct Gap Deficiencies\CD-Cad Drawings\M-452-2.3 MECH ROOF P.DWG

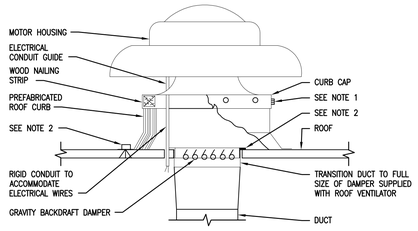

NOTES:
1. SECURE CURB CAP TO WOOD NAILING STRIP WITH 3/8" [10mm] CADMIUM PLATED LAG BOLTS NOT OVER 12" [300mm] ON CENTER.
2. SECURE ROOF CURB, DUCTWORK AND DAMPER TO ROOF WITH EXPANSION BOLTS (CONCRETE ROOF) OR RUST RESISTANT BOLTS (METAL DECK AND BAR JOIST ROOF).
3. RUN ELECTRICAL LINES THROUGH CLEARANCE HOLE PROVIDED IN GRAVITY DAMPER, THEN THROUGH ELECTRICAL CONDUIT GUIDE.

10 POWER ROOF VENTILATOR
NTS

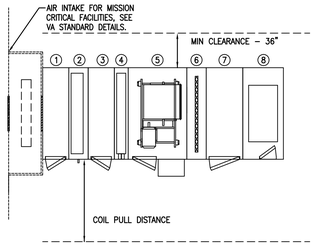

AIR HANDLING UNIT	ITEM	100% OUTSIDE AIR THREE BEDS OF FILTERS CV
PREFILTERS	1	YES
DX COOLING COIL	2	YES
ACCESS SECTION WITH LIGHT	3	YES
HEATING COIL	4	YES
FAN WITH ACCESS DOOR AND LIGHT	5	YES
DIFFUSER	6	YES
AFTER FILTER	7	YES
DISCHARGE PLENUM WITH TOP OUTLET AND ACCESS DOOR	8	YES

NOTES:
1. ACCESS DOORS SHALL BE GASKETED AND HINGED TO OPEN AGAINST FAN OPERATING PRESSURE TO PREVENT AIR LEAKAGE.
2. ACCESS DOOR HEIGHT SHALL BE DETERMINED BY UNIT CASING BUT NOT TO EXCEED 6'-0" [1800mm].
3. ACCESS DOORS ON FAN SUCTION SHALL OPEN OUTWARD.
4. ACCESS DOORS ON FAN DISCHARGE SIZE SHALL OPEN INWARD.

8 ACCESS DOOR SWING DETAIL FOR AIR HANDLING UNITS
NTS

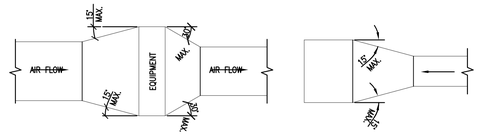

TYPICAL DUCTWORK TRANSITION WITH EQUIPMENT MOUNTED IN DUCT PLAN OR SIDE VIEW

TYPICAL DUCTWORK TRANSITION PLAN OR SIDE VIEW

NOTE:
1. UNLESS OTHERWISE INDICATED ON PLANS, MAXIMUM ANGLES SHOWN SHALL APPLY.

5 DUCTWORK TRANSITIONS (WITH EQUIPMENT MOUNTED IN DUCT)
NTS

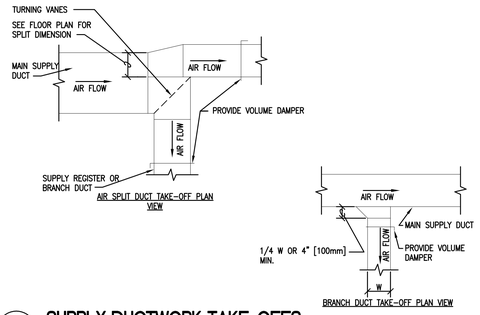

1 SUPPLY DUCTWORK TAKE-OFFS
NTS

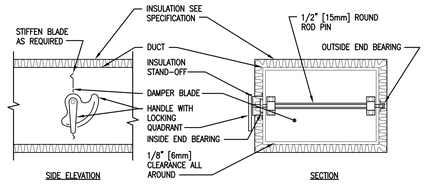

NOTES:
1. DELETE INSULATION STAND-OFF ON DUCTWORK WITHOUT EXTERIOR INSULATION.
2. DETAIL SHOWS SINGLE BLADE DAMPER. DAMPER INSTALLATION SHALL BE SIMILAR FOR MULTI-BLADE DAMPERS & ROUND DAMPERS.

6 VOLUME DAMPER DETAIL
NTS

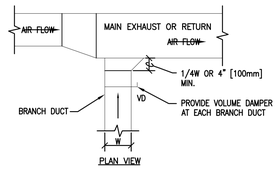

2 EXHAUST OR RETURN BRANCH DUCTWORK
NTS

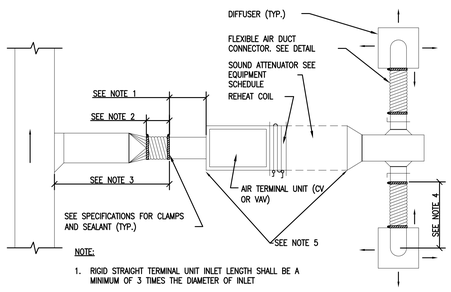

NOTE:
1. RIGID STRAIGHT TERMINAL UNIT INLET LENGTH SHALL BE A MINIMUM OF 3 TIMES THE DIAMETER OF INLET
2. A FLEXIBLE AIR DUCT CONNECTOR IS NOT MANDATORY FOR INLET TO THIS BOX, BUT ALLOWED TO ACCOMMODATE MINOR OFFSETS. MAXIMUM LENGTH 3'-0" [900mm].
3. A BRANCH DUCT SERVING AN INDIVIDUAL BOX MAY BE THE SAME SIZE AS THE BOX INLET, PROVIDED THE EQUIVALENT LENGTH OF THE BRANCH DUCT, AS SHOWN, DOES NOT EXCEED 10 FEET (3 METERS). FOR LONGER LENGTHS, INCREASE THE DUCT SIZE AND PROVIDE A DUCT TRANSITION TO MAINTAIN THE DUCT STATIC PRESSURE DROP AT OR BELOW 0.2"/100' [1.64Pa/m].
4. FLEXIBLE AIR DUCT CONNECTORS, WHEN USED FROM TERMINAL UNIT SUPPLY AIR DUCT TO DIFFUSER, SHALL NOT EXCEED 5'-0" [1500mm]. USE RIGID ELBOWS FOR CHANGE OF DIRECTION GREATER THAN 45°.
   COMPONENT ARRANGEMENT MAY VARY BY MANUFACTURER. PROVIDE INSULATION W/VAPOR BARRIER FOR CONNECTING DUCT SECTIONS.
5. USE OF THE FLEXIBLE AIR DUCT CONNECTORS ARE NOT PERMITTED FOR THE DEDICATED AHU SERVING THE SURGICAL SUITE.
6.

9 DUCT CONNECTIONS - AIR TERMINAL UNITS
NTS

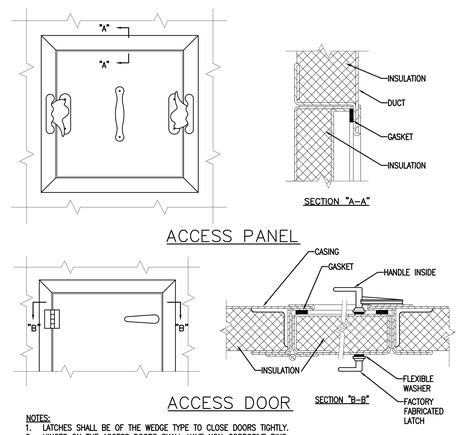

NOTES:
1. LATCHES SHALL BE OF THE WEDGE TYPE TO CLOSE DOORS TIGHTLY.
2. HINGES ON THE ACCESS DOORS SHALL HAVE NON-CORROSIVE PINS.
3. SEE SMACNA 2005, FIGURE 9-15

7 ACCESS PANEL AND DOOR DETAIL
NTS

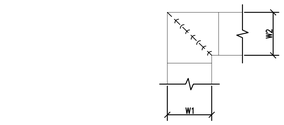

NOTES:
1. ALL VANE ELBOWS SHALL BE CONSTRUCTED AND INSTALLED AS DETAILED BY SMACNA.
2. WHEN W1 DOES NOT EQUAL W2, VANE SHALL BE SINGLE THICKNESS VANE TYPE REGARDLESS OF W DIMENSION.
3. ALL SINGLE THICKNESS VANES SHALL HAVE A 2" [50mm] RADIUS, 1 1/2" [40mm] MAXIMUM SPACE BETWEEN VANES AND A 3/4" [20mm] TRAILING EDGE.
4. WHEN W EQUALS W2 AND W1 IS GREATER THAN 20" [500mm] VANES SHALL BE DOUBLE VANE TYPE.

3 DUCTWORK SQUARE VANE ELBOWS
NTS

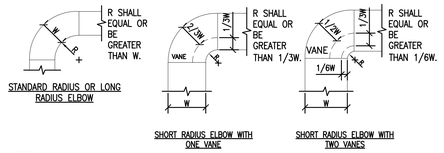

NOTES:
1. THE INTERIOR SURFACE OF ALL RADIUS ELBOWS SHALL BE MADE ROUND.
2. ALL STANDARD RADIUS ELBOWS CAN BE SUBSTITUTED WITH SHORT RADIUS ELBOWS. ALL SHORT RADIUS ELBOWS SHALL HAVE VANES. VANES SHALL BE CONSTRUCTED, SUPPORTED AND FASTENED AS RECOMMENDED BY SMACNA.

4 DUCTWORK RADIUS ELBOWS
NTS

FULLY SPRINKLED

Revisions:	Date

CONSULTANTS:

MEP ASSOCIATES, LLC
engineers | consultants | commissioning
MEP Associates, LLC | 2720 Arbor Court | Eau Claire, WI 54701
Phone: 715.832.5680 | Fax: 715.832.5668 | www.mepassociates.com
MEP PROJECT NO.: A18.13.07

ARCHITECT/ENGINEERS:

ANDERSON ENGINEERING
ENGINEERING • ARCHITECTURE • LAND SURVEYING
ENVIRONMENTAL SERVICES • LANDSCAPE ARCHITECTURE

Anderson Engineering of Minnesota, LLC
13605 1st Avenue North
Suite 100
Plymouth, MN 55441
763-412-4000 (o) 763-412-4090 (f)
www.ae-mn.com

Drawing Title: MECHANICAL DUCTWORK DETAILS

Approved: Project Director

Project Title: CORRECT GAP DEFICIENCIES AT SPS

Location: VA MEDICAL CENTER TOMAH WI

Date: 12-17-2013 | Checked: JAM | Drawn: CMW

Project Number: 676-13-106

Building Number: 452

Drawing Number: M-452-3.1

Dwg. 17 of 27

Office of Construction and Facilities Management

Department of Veterans Affairs

VA FORM 08-6231 (MAR 2012)

PRINTED: 10/22/2013 FILE: U:\676\Anderson Engineering of Minnesota, LLC\13-106 Correct Gap Deficiencies\CD\CD Drawings\M-452-3.1-DUCTWORK.dwg

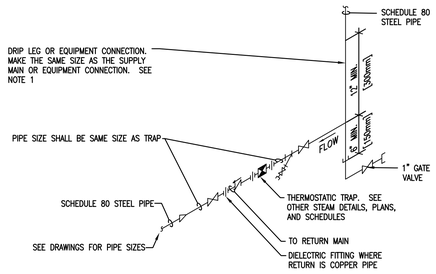

NOTES:
1. ALL DRIP POINTS ON STEAM MAINS SHALL BE PROVIDED WITH A 12" MINIMUM HIGH DRIP LEG FROM BOTTOM OF STEAM MAIN TO TRAP INLET. DRIP LEG SHALL HAVE 6" SCALE POCKET BELOW TRAP INLET.

8 THERMOSTATIC STEAM TRAP ASSEMBLY

NTS

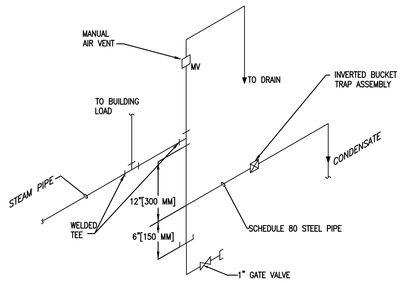

5 END OF STEAM LINE DRIP TRAP

NTS

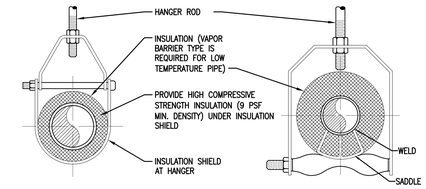

ADJUSTABLE CLEVIS HANGER TYPE 1 – SEE SPECIFICATIONS

ADJUSTABLE CLEVIS HANGER TYPE 43 – SEE SPECIFICATIONS

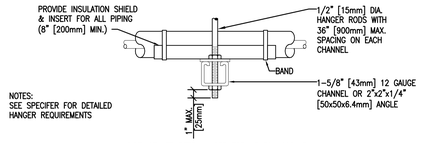

NOTES:
SEE SPECIFER FOR DETAILED HANGER REQUIREMENTS

SIDE VIEW TRAPEZE HANGER FOR UP TO 1000 LB. [453KG] UNIFORM LOAD

MAXIMUM PIPE/TUBING SUPPORT SPACING																			
NOM. SIZE	IN. [mm]	THRU 3/4 THRU [20]	1 [25]	1 1/4 [32]	1 1/2 [40]	2 [50]	2 1/2 [65]	3 [75]	4 [100]	5 [125]	6 [150]	8 [200]	10 [250]	12 [300]	14 [350]	16 [400]	18 [450]	20 [500]	24 [600]
PIPE	FT. [mm]	7 [2100]	7 [2100]	7 [2100]	9 [2700]	10 [3000]	11 [3400]	12 [3700]	14 [4100]	16 [4900]	17 [5200]	19 [5800]	22 [6700]	23 [7000]	25 [7600]	27 [8200]	28 [8500]	30 [9100]	32 [9600]
TUBING	FT. [mm]	5 FT [1500]	6 [1800]	7 [2100]	8 [2400]	8 [2400]	9 [2700]	10 [3000]	12 [3700]	13 [4000]	14 [4100]	16 [4900]	– –	– –	– –	– –	– –	– –	– –
NOTE: FOR TRAPEZE HANGER TAKE SPACING OF SMALLEST SIZE ON TRAPEZE.																			

2 PIPE HANGERS

NTS

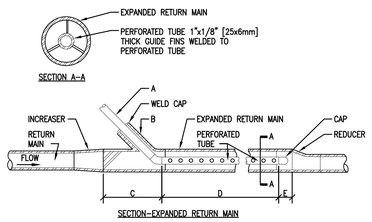

SECTION–EXPANDED RETURN MAIN

A	SIZE, TRAP DISCHARGE LINE	1/2" [15mm]	3/4" [20mm]
B	SIZE, 45° WELDING NIPPLE	1" [25mm]	1–1/4" [32mm]
C	LENGTH OF EXPANDED MAIN AHEAD OF TRAP DISCHARGE PIPE	7" [175mm]	7" [175mm]
D	LENGTH OF PERFORATED PIPE	16–1/2" [415mm]	16–1/2" [415mm]
E	LENGTH OF EXPANDED MAIN OF FOLLOWING PERFORATED PIPE	2" [50mm]	2" [50mm]

RETURN MAIN SIZE	UP TO 1–1/2" [40mm]	2" [50mm]	3" [75mm] & OVER
EXPANDED RETURN MAIN SIZE		2–1/2" [65mm]	SAME SIZE

NOTES:
1. 1/2" [15mm] PERFORATED TUBE SHALL HAVE 40 – 1/8" [16mm] DIAMETER HOLES SPACED 1–1/2" [40mm] O.C. IN 4 ROWS.
2. 3/4" [20mm] PERFORATED TUBE SHALL HAVE 78 – 1/8" [6mm] DIAMTER HOLES SPACED 1–1/2" [40mm] O.C. IN 6 ROWS.
3. HOLES IN TUBE SHALL BE SPACED EQUALLY AROUND PERIMETER.

9 HIGH AND MEDIUM PRESSURE STEAM TRAP DISCHARGE INTO PUMPED CONDENSATE RETURN LINE

NTS

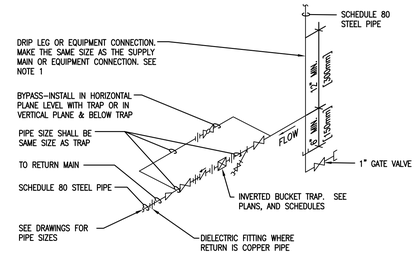

NOTES:
1. ALL DRIP POINTS ON STEAM MAINS SHALL BE PROVIDED WITH A 12" MINIMUM HIGH DRIP LEG FROM BOTTOM OF STEAM MAIN TO TRAP INLET. DRIP LEG SHALL HAVE 6" SCALE POCKET BELOW TRAP INLET.
2. PROVIDE BYPASS PIPING.

6 INVERTED BUCKET STEAM TRAP ASSEMBLY

NTS

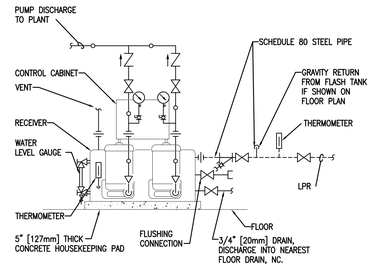

3 CONDENSATE PUMPS - PIPING CONNECTIONS

NTS

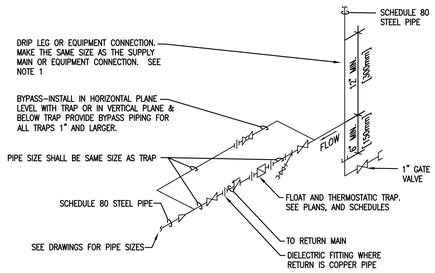

NOTES:
1. ALL DRIP POINTS ON STEAM MAINS SHALL BE PROVIDED WITH A 12" MINIMUM HIGH DRIP LEG FROM BOTTOM OF STEAM MAIN TO TRAP INLET. DRIP LEG SHALL HAVE 6" SCALE POCKET BELOW TRAP INLET.

7 FLOAT AND THERMOSTATIC STEAM TRAP ASSEMBLY

NTS

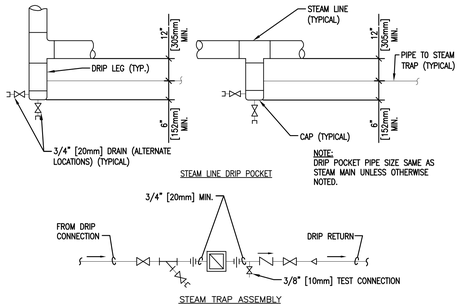

4 STEAM LINE DRIP POCKET STEAM TRAP ASSEMBLY

NTS

FULLY SPRINKLED

Revisions:	Date

CONSULTANTS:

MEP ASSOCIATES, LLC
engineers | consultants | commissioning
MEP Associates, LLC | 2720 Arbor Court | Eau Claire, WI 54701
Phone: 715.832.5680 | Fax: 715.832.5668 | www.mepassociates.com
MEP PROJECT NO.: A18.13.07

ARCHITECT/ENGINEERS:

ANDERSON ENGINEERING
ENGINEERING • ARCHITECTURE • LAND SURVEYING
ENVIRONMENTAL SERVICES • LANDSCAPE ARCHITECTURE

Anderson Engineering of Minnesota, LLC
13605 1st Avenue North
Suite 100
Plymouth, MN 55441
763-412-4000 (o) 763-412-4090 (f)
www.ae-mn.com

Drawing Title: MECHANICAL STEAM PIPING DETAILS

Approved: Project Director

Project Title: CORRECT GAP DEFICIENCIES AT SPS

Location: VA MEDICAL CENTER TOMAH WI

Date: 12-17-2013 | Checked: JAM | Drawn: CMW

Project Number: 676-13-106

Building Number: 452

Drawing Number: M-452-3.2

Dwg. 18 of 27

Office of Construction and Facilities Management

Department of Veterans Affairs

VA FORM 08-6231 (MAR 2012)

PRINTED: 10/7/2013 FILE: U:\676 Veterans Engineering of Minnesota, LLC\A18.13.07 VA Tomah Correct Gap Deficiencies\CD Drawings\M-452-3.2-3.3 MECH STEAM.dwg

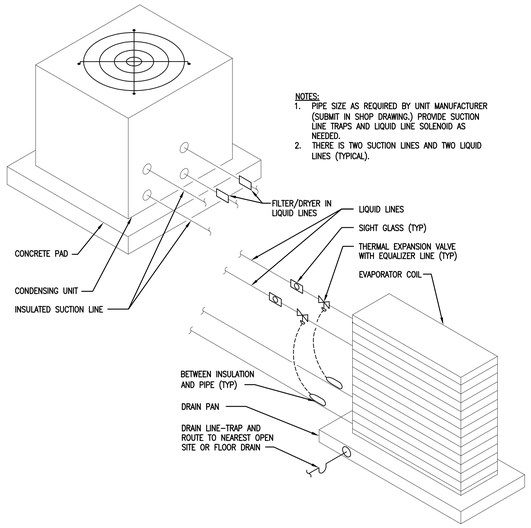

NOTES:
1. PIPE SIZE AS REQUIRED BY UNIT MANUFACTURER (SUBMIT IN SHOP DRAWING.) PROVIDE SUCTION LINE TRAPS AND LIQUID LINE SOLENOID AS NEEDED.
2. THERE IS TWO SUCTION LINES AND TWO LIQUID LINES (TYPICAL).

10 REFRIGERANT PIPING COMPONENT DETAIL

NTS

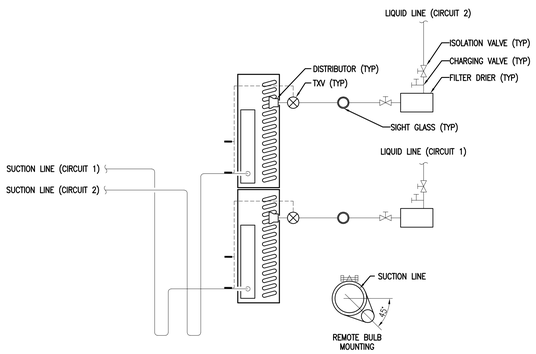

11 DUAL CIRCUIT FACE SPLIT REFRIGERANT COIL PIPING DETAIL

NTS

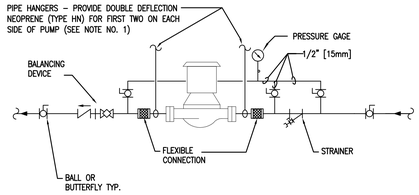

NOTES:
1. SUPPORT PUMP FROM PIPING ONLY. DO NOT SUPPORT PUMP FROM MOTOR.

7 IN-LINE PUMPS - CONNECTIONS

NTS

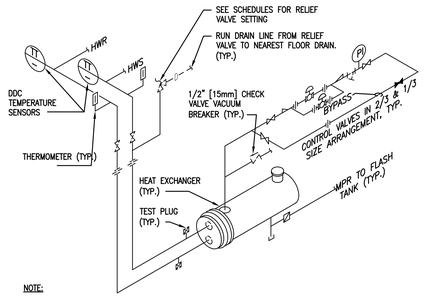

NOTE:
1. THE ABOVE DETAIL SHOWS REQUIRED PIPING FOR TWO HEAT EXCHANGERS IN PARALLEL.
2. PROVIDE SADDLE SUPPORTS AND LEGS OR HANGERS FOR HEAT EXCHANGER. MOUNTING HEIGHT SHALL BE ADJUSTED TO FACILITATE GRAVITY RETURN OF STEAM CONDENSATE.
3. MAKE THE BYPASS THE SAME SIZE AS THE CONNECTIONS TO THE CONTROL VALVES.
4. CONTROL VALVES SHALL BE IN A $\frac{2}{3}$ AND $\frac{1}{3}$ SIZE ARRANGEMENT.

8 HEAT EXCHANGER - STEAM TO HOT WATER

NTS

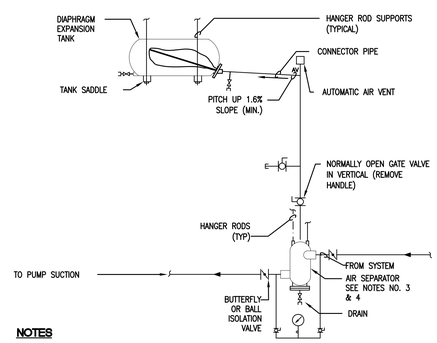

NOTES
1. SEE EXPANSION TANK SYSTEM SCHEDULE FOR COMPONENT SIZES.
2. PROVIDE STRAINER IN AIR SEPARATOR WHEN INDICATED IN EXPANSION TANK SCHEDULE.
3. FOR HOT WATER SYSTEMS 2" [50mm] AND SMALLER AND CHILLED WATER SYSTEMS USE IN-LINE AIR PURGER IN LIEU OF AIR SEPARATOR.
4. SET PRESSURE REDUCING VALVE SO PRESSURE AT HIGHEST POINT IN SYSTEM HAS A MINIMUM OF 4 PSIG. [28kPa]

9 HORIZONTAL EXPANSION TANK - PIPING CONNECTIONS

NTS

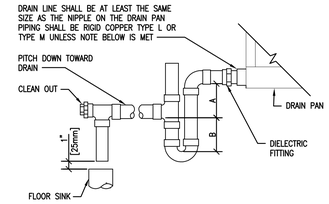

NOTES:
1. CPVC PIPE MAY BE USED ONLY IF APPROVED BY LOCAL VA AND IS INDOORS AND DOES NOT PASS THROUGH RATED BARRIERS.
2. DIELECTRIC FITTING TO BE USED WHEN TWO DISSIMILAR METALS ARE TO BE CONNECTED.

UNIT TYPE	A	B
DRAIN THRU	2" [50mm] PLUS X	X
BLOW THRU	1" [25mm] MINIMUM	2X

WHERE X = STATIC PRESSURE IN PAN

3 AIR HANDLING UNIT DRAIN TRAP DETAIL

NTS

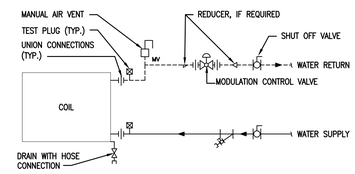

4 DUCT WATER COIL PIPING CONNECTIONS

NTS

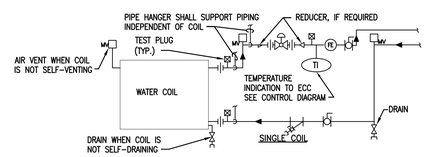

NOTES:
1. WHEN COIL IS INCLUDED IN CASING MOUNTED ON VIBRATION ISOLATORS THE FIRST 2 HANGERS FOR EACH PIPE SHALL BE SPRING & NEOPRENE TYPE. TYPE "H" FOR 4" [100mm]ø PIPE AND SMALLER. TYPE "H-P" FOR 5" [125mm]ø PIPE AND LARGER.
2. PIPING SHALL BE INSTALLED IN SUCH MANNER THAT IT WILL NOT BLOCK THE SWING OR USE OF ACCESS DOORS OR PANELS; NEITHER SHALL IT BLOCK THE SERVICING OF FILTERS, VALES, OR EQUIPMENT.
3. THE FLOW ELEMENT MAY BE INSTALLED IN THE SUPPLY PIPING IF THE REQUIRED MINIMUM UPSTREAM AND DOWNSTREAM DIMENSIONS CANNOT BE OBTAINED IN THE RETURN PIPING.

5 WATER COILS - PIPING CONNECTIONS

NTS

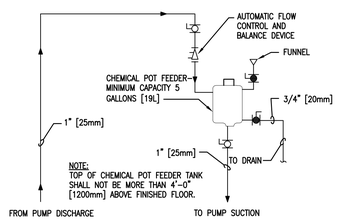

6 WATER TREATMENT - CLOSED SYSTEMS

NTS

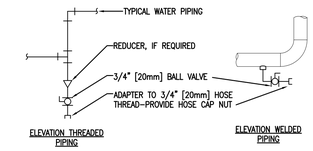

TYPICAL CHILLED AND HOT WATER PIPING DRAIN VALVE CONNECTIONS

NOTES:
1. DRAIN ALL LOW POINTS AS INDICATED ABOVE.
2. WHERE SCALE POCKETS ARE SHOWN ON PIPE RISER DIAGRAMS AND/OR PLANS LOCATE DRAIN AT BOTTOM OF SCALE POCKET.

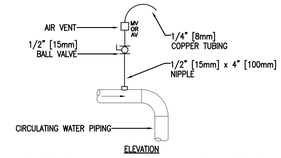

TYPICAL MANUAL AIR VENT

NOTES:
1. VENT ALL HIGH POINTS INDICATED ABOVE.
2. IF AUTOMATIC AIR VENTS ARE USED, PIPE DISCHARGE TO DRAIN.

1 DRAIN VALVE AND AIR VENT CONNECTIONS (HYDRONIC SYSTEMS)

NTS

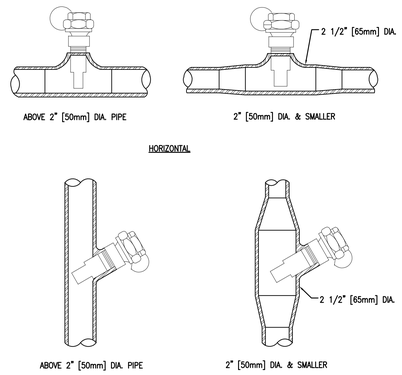

2 INSTALLATION OF THERMOMETER WELLS

NTS

FULLY SPRINKLED

Revisions:	Date

CONSULTANTS:

MEP ASSOCIATES, LLC
engineers | consultants | commissioning
MEP Associates, LLC | 2720 Arbor Court | Eau Claire, WI 54701
Phone: 715.832.5680 | Fax: 715.832.5668 | www.mepassociates.com
MEP PROJECT NO.: A18.13.07

ARCHITECT/ENGINEERS:

ANDERSON ENGINEERING
ENGINEERING • ARCHITECTURE • LAND SURVEYING
ENVIRONMENTAL SERVICES • LANDSCAPE ARCHITECTURE

Anderson Engineering of Minnesota, LLC
13605 1st Avenue North
Suite 100
Plymouth, MN 55441
763-412-4000 (o) 763-412-4090 (f)
www.ae-mn.com

Drawing Title: MECHANICAL WATER AND REFRIGERANT PIPING DETAILS

Approved: Project Director

Project Title: CORRECT GAP DEFICIENCIES AT SPS

Location: VA MEDICAL CENTER TOMAH WI

Date: 12-17-2013 | Checked: JAM | Drawn: CMW

Project Number: 676-13-106

Building Number: 452

Drawing Number: M-452-3.3

Dwg. 19 of 27

Office of Construction and Facilities Management

Department of Veterans Affairs

VA FORM 08-6231 (MAR 2012)

CONTROL SYMBOLS

Symbol	Description	Symbol	Description
T	ROOM THERMOSTAT	KR	LOCAL RECORDING TIME CLOCK (RUNTIME)
M	ROOM HUMIDISTAT	S20	INSTRUMENT OR CONTROL AIR AT 20-PISG
TT	TEMPERATURE TRANSMITTER	EPT	ELECTRONIC TO PNEUMATIC TRANSDUCER
TT	TEMPERATURE TRANSMITTER, AVERAGING ELEMENT	AT CO2	CARBON DIOXIDE TRANSMITTER
MT	MOISTURE (HUMIDITY) TRANSMITTER	AT CO	CARBON MONOXIDE TRANSMITTER
PT	PRESSURE TRANSMITTER	AT OC	OCCUPANCY SENSOR
SPS	STATIC PRESSURE SENSOR	LTCP	LOCAL TEMPERATURE CONTROL PANEL
FT	FLOW TRANSMITTER	HVAC	HVAC CONTROL PANEL
IT	CURRENT TRANSMITTER	ASD	ADJUSTABLE SPEED DRIVE
CT	CONDUCTIVITY TRANSMITTER	ECC	INTEGRATE CONTROL POINT ON REMOTE GRAPHICS WORKSTATION AT ENERGY CONTROL CENTER
SD	SMOKE DETECTOR	TC	TEMPERATURE CONTROLLER. SEE SEQUENCE OF OPERATION
M	ELECTRIC OPERATED CONTROL DAMPER/OR VALVE	PC	PRESSURE CONTROLLER. SEE SEQUENCE OF OPERATION
P	PNEUMATIC OPERATED CONTROL DAMPER/OR VALVE	SC	SPEED CONTROLLER. SEE SEQUENCE OF OPERATION
dPT	DIFFERENTIAL PRESSURE TRANSMITTER	FC	FLOW CONTROLLER. SEE SEQUENCE OF OPERATION
HS	HAND SWITCH (HAND-OFF-AUTO SWITCH)	(box with X)	MOTOR STARTER
KC	TIME CLOCK CONTROLLING EQUIPMENT ON A SCHEDULE	FS	FLOW SWITCH
ZC	VALVE OR DAMPER POSITION CONTROLLER	(sensing element)	TEMPERATURE SENSING ELEMENT FOR TRANSMITTING TEMPERATURE TO EMCS (PROVIDE 12 INCHES [200mm] MINIMUM LENGTH IN DUCT WHEN SPACE PERMITS.)
KR	LOCAL RECORDING TIME CLOCK (RUNTIME)	(sensing element) A	SENSOR WITH AVERAGING ELEMENT TO TRANSMIT TEMPERATURE TO EMCS
TSL	TEMPERATURE SWITCH, LOW (FREEZESTAT)	DP	DIFFERENTIAL PRESSURE SENSOR (IN. W.G. OR FT. HD.)
LC	LEVEL CONTROLLER	MON	DIFFERENTIAL PRESSURE MONITOR-DISPLAY
LT	LEVEL TRANSMITTER		
PSH	PRESSURE SWITCH HIGH		

CONTROL SYSTEM NOTES

REPLACE ALL PNEUMATIC CONTROLS WITH DDC, INCLUDING TEMPERATURE AND HUMIDITY SENSORS, CONTROL VALVES AND ACTUATORS, ALL DAMPER ACTUATORS, STEAM TO HOT WATER CONTROL VALVE, HUMIDIFIER CONTROL VALVE. ALL NEW CONTROLS TO BE DDC. CONTROLS TO CONNECT WITH EXISTING ECC THROUGH CAMPUS NETWORK.

PROVIDE MINIMUM OF 4 HOURS CONTROLS TRAINING COMBINING DISCUSSION AND HANDS ON TRAINING . SCHEDULE TRAINING WITH COR TWO WEEKS AHEAD OF TIME. SIMULTANEOUS WITH ARRANGING TRAINING, PROVIDE TRAINING HANDOUT MATERIALS INCLUDING; OUTLINE OF TRAINING, SEQUENCE OF OPERATIONS, CONTROL SYSTEM DIAGRAMS, SCREEN SHOTS, AND POINT LISTS.

PROVIDE LAMINATED RECORD COPY OF CONTROL DIAGRAM, SEQUENCE OF OPERATIONS, AND POINT LISTS TO BE LEFT IN BUILDING 452 MECHANICAL ROOM, LEGIBLE, 11 X 17.

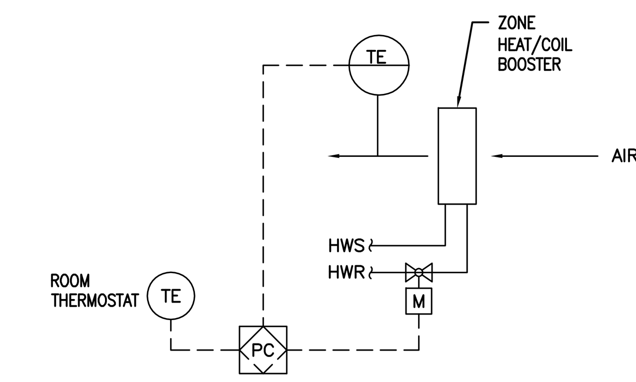

NOTE:
UNIT HEATER SIMILAR FAN TURN ON AFTER WATER VALVE OPENS. NO DISCHARGE AIR SENSOR FOR UNIT HEATER.

1 ZONE HEAT COIL CONTROL DIAGRAM
NTS

SEQUENCE OF OPERATION (HEATING WATER SYSTEM):
1. STEAM CONTROLS VALVE SHALL MODULATE TO MAINTAIN THE LEAVING HOT WATER TEMPERATURE AT SET POINT.
2. THE LEAVING HOT WATER TEMPERATURE SHALL BE RESET INVERSELY WITH THE OUTDOOR TEMPERATURE AS SCHEDULED.

SEQUENCE OF OPERATION (AHU PREHEAT COIL GLYCOL LOOP):
1. STEAM COILS SHALL MODULATE TO MAINTAIN THE AIR HANDLING UNIT DISCHARGE AIR TEMPERATURE AS DETERMINED BY ECC.
2. AIR HANDLING UNIT DISCHARGE AIR TEMPERATURE SETPOINT TO BE RESET BY ECC BASED ON NEED FOR DEHUMIDIFICATION AND TO REDUCE UNNECESSARY DX COOLING. PREHEAT COIL HEATS DISCHARGE AIR TEMPERATURE AS REQUIRED.
3. THE LEAVING FLUID TEMPERATURE SHALL BE RESET INVERSELY WITH THE OUTDOOR AIR TEMPERATURE AS SCHEDULED (ADJUSTABLE).

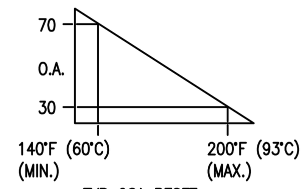

TYP OSA RESET SCHEDULE

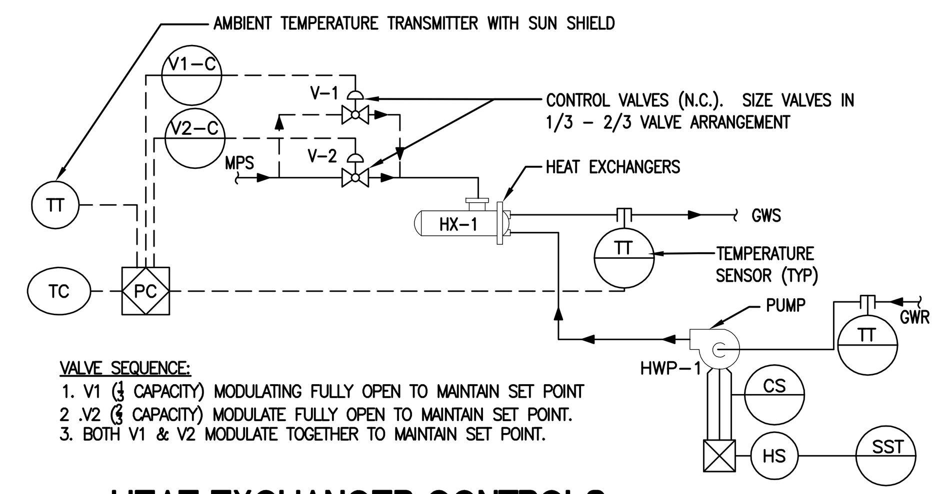

VALVE SEQUENCE:
1. V1 (1/3 CAPACITY) MODULATING FULLY OPEN TO MAINTAIN SET POINT
2 .V2 (2/3 CAPACITY) MODULATE FULLY OPEN TO MAINTAIN SET POINT.
3. BOTH V1 & V2 MODULATE TOGETHER TO MAINTAIN SET POINT.

2 HEAT EXCHANGER CONTROLS (AHU PREHEAT COIL AND HEATING WATER SYSTEM)
NTS

JOB: BUILDING: 452 / SYSTEM: AHU / SYSTEM COMPONENT:	POINT ID	ABBREVIATION	PRIORITY/ADD-ALTERNATE NO.	--	ELECTRIC DEVICE	START/STOP	OPEN/CLOSE	--	SPEED COMMAND	VALVE POSITION	DAMPER POSITION	STATUS	ALARM	PRESSURE / DIFF PRESS	HIGH HUMIDITY	HI/LOW STATIC/DIFF PRESS	LOW TEMPERATURE	--	TEMPERATURE (TI)	PRESSURE	POSITION	FLOW	PERCENT	STATIC PRESSURE	CARBON MONOXIDE	HUMIDITY	VACUUM	Local Alarm Panel	Area Alarm Panel	Master Alarm Panel	HIGH LIMIT	LOW LIMIT	--	--	SCHEDULE START/STOP	FUNCTION	DUTY CYCLE	TEMPERATURE ECONOMIZER	ENTHALPY ECONOMIZER	TEMPERATURE RESET	DEMAND LIMITING	TEMPERATURE OVERRIDE	STATIC PRESSURE RESET	--	--	PRESSURE/VOLUME CONTROL	FAILURE MODE	SPACE TEMP. CONTROL	FULL COMMUNICATION	TRENDING	REMARKS
ZONE HEAT COIL	–	–								●									●		●									●	●																			●	HEAT COIL
UNIT HEATER						●				●									●		●																														UNIT HEATER

(Column groups: POINT LEGEND; SYSTEM OUTPUTS — BINARY, ANALOG; SYSTEM INPUTS — BINARY, ANALOG; SYSTEM SOFTWARE/CONTROL — ALARM PROCESSING, APPLICATION/FUNCTION; PAGE:)

1A POINTS LIST FOR ZONE HEAT COIL CONTROL

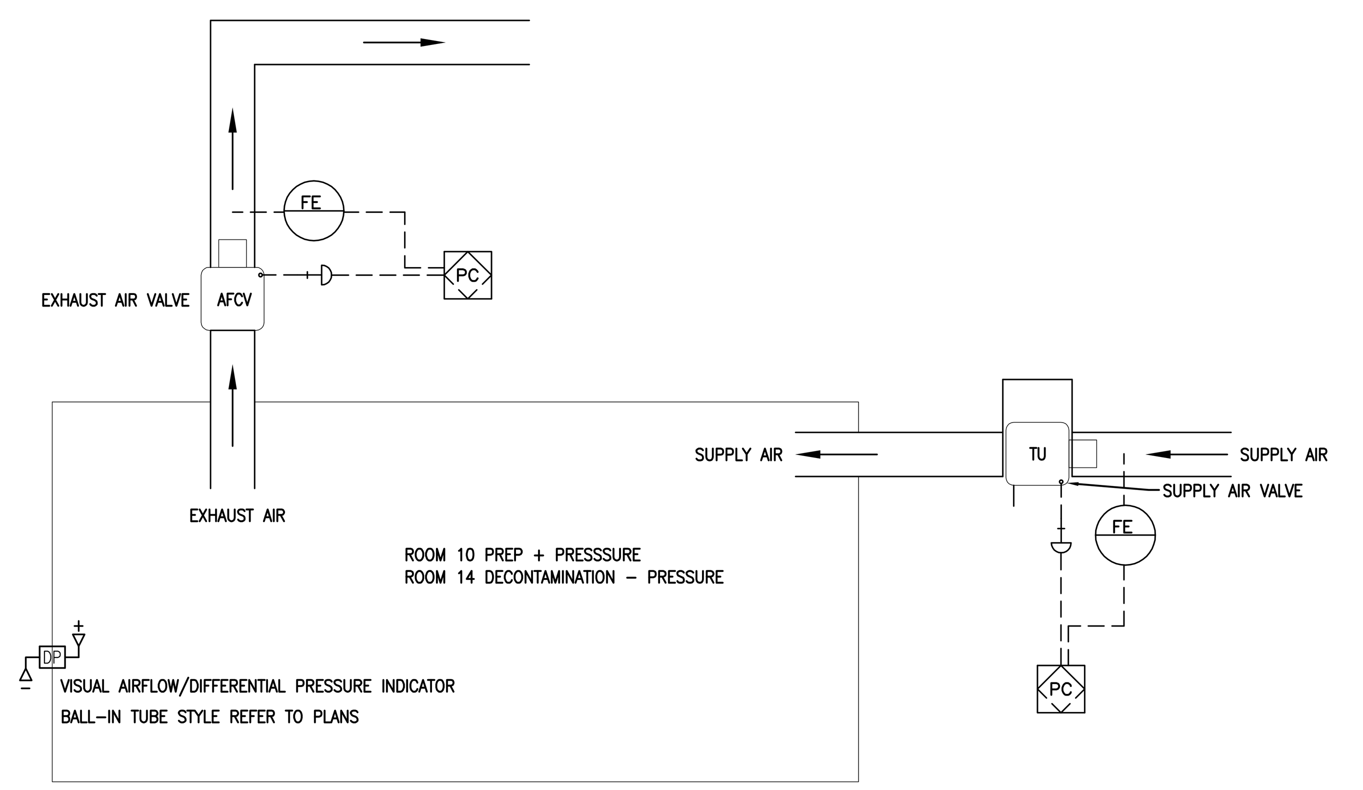

5 ROOM AIR BALANCE CONTROL SYSTEM
NTS

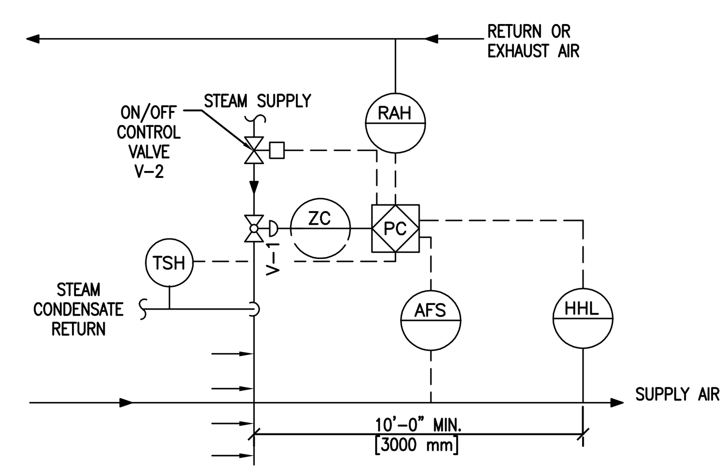

STEAM HUMIDIFIER
RETURN (OR EXHAUST) AIR HUMIDITY SHALL BE MONITORED. ON A CALL FOR HUMIDIFICATION, HUMIDIFIER VALVE V-1 SHALL MODULATE TO MAINTAIN THE RETURN (OR EXHAUST) AIR HUMIDITY SET POINT TO 30% (ADJUSTABLE). PRIOR TO ACTIVATION OF V-1, THE ON/OFF CONTROL VALVE V-2 SHALL BE ENABLED THROUGH ECC AND JACKET TEMPERATURE SENSED BY TSH SHALL BE WARM ENOUGH TO PREVENT CONDENSATION. THE HIGH LIMIT HUMIDITY SENSOR, LOCATED IN THE SUPPLY AIR DUCT 10 FEET AWAY FROM THE HUMIDIFIER SHALL DISABLE THE HUMIDIFIER AND GIVE AN ALARM SIGNAL TO THE ECC, IF THE SUPPLY AIR HUMIDITY EXCEEDS 90% RH (ADJUSTABLE). THE AIRFLOW SWITCH SHALL PROVE AIRFLOW BEFORE HUMIDITY CONTROLS ARE ACTIVATED.

4 STEAM HUMIDIFIER CONTROLS
NTS

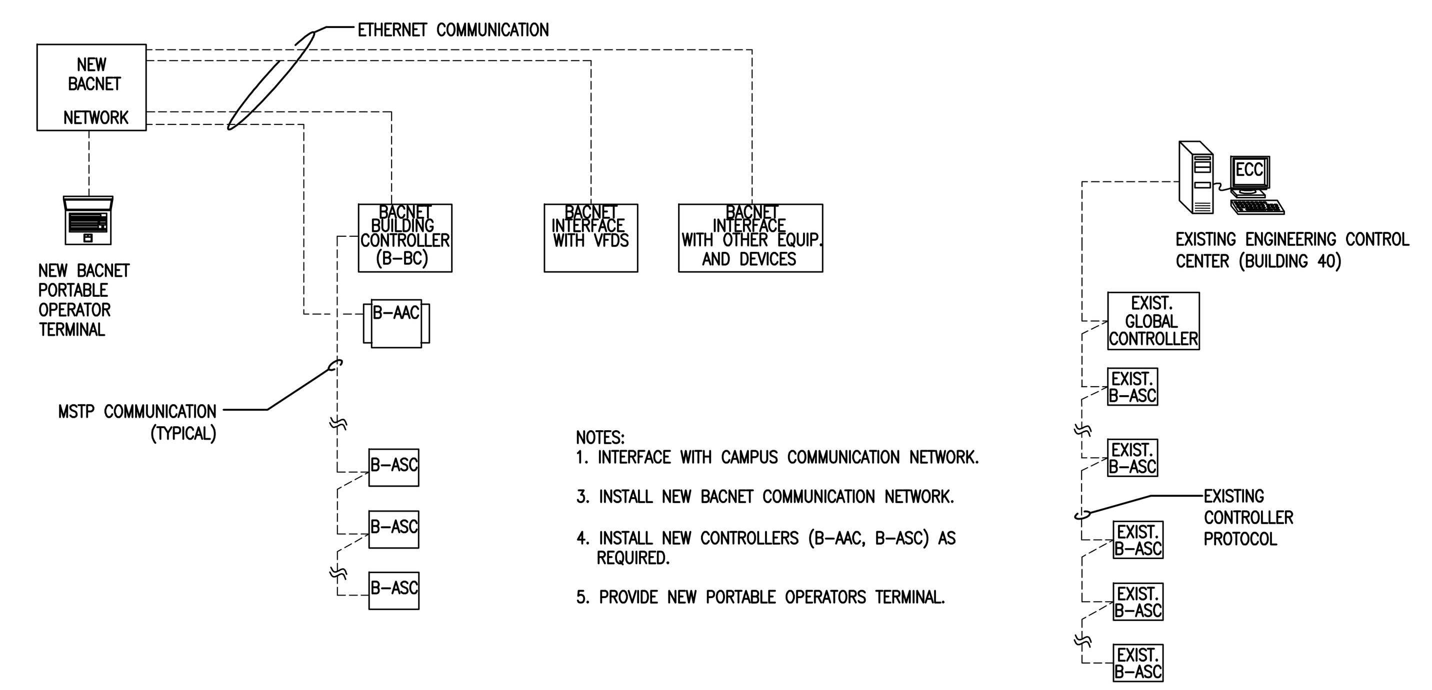

NOTES:
1. INTERFACE WITH CAMPUS COMMUNICATION NETWORK.
3. INSTALL NEW BACNET COMMUNICATION NETWORK.
4. INSTALL NEW CONTROLLERS (B-AAC, B-ASC) AS REQUIRED.
5. PROVIDE NEW PORTABLE OPERATORS TERMINAL.

3 BACNET SYSTEM ARCHITECTURE
NTS

JOB: BUILDING: 452 / SYSTEM: AHU / SYSTEM COMPONENT:	POINT ID	ABBREVIATION	PRIORITY/ADD-ALTERNATE NO.	--	ELECTRIC DEVICE	START/STOP	OPEN/CLOSE	--	SPEED COMMAND	VALVE POSITION	DAMPER POSITION	STATUS	ALARM	PRESSURE / DIFF PRESS	HIGH HUMIDITY	HI/LOW STATIC/DIFF PRESS	LOW TEMPERATURE	--	TEMPERATURE (TI)	PRESSURE	POSITION	FLOW	PERCENT	STATIC PRESSURE	CARBON MONOXIDE	HUMIDITY	VACUUM	Local Alarm Panel	Area Alarm Panel	Master Alarm Panel	HIGH LIMIT	LOW LIMIT	--	--	SCHEDULE START/STOP	FUNCTION	DUTY CYCLE	TEMPERATURE ECONOMIZER	ENTHALPY ECONOMIZER	TEMPERATURE RESET	DEMAND LIMITING	TEMPERATURE OVERRIDE	STATIC PRESSURE RESET	--	--	PRESSURE/VOLUME CONTROL	FAILURE MODE	SPACE TEMP. CONTROL	FULL COMMUNICATION	TRENDING	REMARKS
EXHAUST AIR VALVE	–	–									●										●	●						●			●	●																		●	6
SUPPLY AIR TERMINAL UNIT (VAV)											●										●	●																													

(Column groups: POINT LEGEND; SYSTEM OUTPUTS — BINARY, ANALOG; SYSTEM INPUTS — BINARY, ANALOG; SYSTEM SOFTWARE/CONTROL — ALARM PROCESSING, APPLICATION/FUNCTION; PAGE:)

REMARKS:
1. COORDINATE SETTING WITH TEST AND BALANCE.
2. ECC TO CALCULATE AND CONTROL TO MAINTAIN SPACE DIFFERENTIAL AIRFLOW (ADJUSTABLE).
3. 3. AIRFLOWS AND SETPOINTS TO BE DETERMINED DURING STARTUP WORKING WITH TEST AND BALANCE.
4. 4. PROVIDE ALARM AT ECC, LOCAL IN CONTROLLED SPACE, AND AT AIR HANDLING SYSTEM LOCAL CONTROL PANEL.

5A POINTS LIST FOR ROOM AIR BALANCE CONTROL SYSTEM

FULLY SPRINKLED

Revisions: | Date

CONSULTANTS:
MEP ASSOCIATES, LLC
engineers | consultants | commissioning
MEP Associates, LLC | 2720 Arbor Court | Eau Claire, WI 54701
Phone: 715.832.5680 | Fax: 715.832.5668 | www.mepassociates.com
MEP PROJECT NO.: A18.13.07

ARCHITECT/ENGINEERS:
ANDERSON ENGINEERING
ENGINEERING • ARCHITECTURE • LAND SURVEYING
ENVIRONMENTAL SERVICES • LANDSCAPE ARCHITECTURE
Anderson Engineering of Minnesota, LLC
13605 1st Avenue North
Suite 100
Plymouth, MN 55441
763-412-4000 (o) 763-412-4090 (f)
www.ae-mn.com

Drawing Title	Project Title	Project Number
MECHANICAL CONTROL DETAILS	CORRECT GAP DEFICIENCIES AT SPS	676-13-106
		Building Number: 452
Approved: Project Director	Location: VA MEDICAL CENTER TOMAH WI	Drawing Number: M-452-3.4
	Date: 12-17-2013 / Checked: JAM / Drawn: CMW	Dwg. 20 of 27

Office of Construction and Facilities Management
Department of Veterans Affairs

PRINTED: 9/12/2013 FILE: I:\(A18) Anderson Engineering of Minnesota, LLC\A18.13.07 VA Tomah Correct Gap Deficiencies\03-CAD Drawings\M-452-3.1-3.5 MECH DETAILS.dwg

SEQUENCE OF OPERATION FOR DEDICATED OUTDOOR AIR HANDLING UNIT WITH ENERGY RECOVERY WHEEL

GENERAL:
1.1 AIR HANDLING SYSTEM SHALL BE CONTROLLED BY THE ECC AND PROVIDED WITH A GRAPHICAL LOCAL CONTROL PANEL PROVIDING SYSTEM AND EQUIPMENT STATUS, SETPOINT AND ALARM POINT ADJUST, AND ALARMS.

1.2 AIR HANDLING UNIT SUPPLY FAN AND EXHAUST FAN ARE STARTED AND STOPPED REMOTELY FROM THE ECC. H-O-A SWITCHES SHALL BE KEPT IN THE "AUTO" POSITION. "HAND" AND "OFF" POSITIONS SHALL BE USED ONLY FOR MAINTENANCE. WHEN THE UNIT IS "OFF" THE OUTSIDE AND EXHAUST AIR DAMPERS SHALL BE FULLY CLOSED, VERIFIED BY DAMPER END SWITCHES; ALARM IF NOT FULL CLOSED. WHEN THE UNIT IS "ON" THE OUTSIDE AND EXHAUST AIR DAMPERS SHALL FULLY OPEN, VERIFIED BY DAMPER END SWITCHES; ALARM IF NOT FULLY OPEN.

1.3 UPON RECEIPT OF START COMMAND, ECC SHALL ENERGIZE OUTDOOR AND EXHAUST AIR DAMPERS. ONCE OUTDOOR, AND EXHAUST AIR DAMPERS ARE PROVEN FULL OPEN, VIA THEIR END SWITCHES, THE SUPPLY AND EXHAUST FANS SHALL START AND RAMP TO SPEED, COMING UNDER CONTROL BASED ON DUCT STATIC PRESSURE.

1.4 EXHAUST AND SUPPLY FAN OPERATION SHALL BE VERIFIED THROUGH VFDS, PROVIDE ALARM AT ECC AND LOCAL CONTROL PANEL SHOULD FAN OPERATION NOT BE VERIFIED WHEN CONTROL SYSTEM CALLS FOR FAN OPERATION.

1.5 EXHAUST AND SUPPLY FANS SHALL NEVER OPERATE WHEN THEIR ASSOCIATED DAMPER IS SHUT. SHOULD DAMPER BE DETERMINED TO NOT BE FULLY OPEN WHEN ASSOCIATED FAN IS TRYING TO RUN OR IS RUNNING; ALARM AND SHUT DOWN FAN IF OPERATING.

1.6 ENERGY RECOVERY HEAT EXCHANGER SHALL BE VERIFIED OPERATIONAL THROUGH DETERMINING THAT ENERGY RECOVERY DAMPER IS OPEN AND ECONOMIZER DAMPER IS SHUT; PROVIDE ALARM AT ECC AND LOCAL CONTROL PANEL SHOULD DAMPER POSITIONS BE DETERMINED TO NOT BE IN CORRECT POSITION. NORMAL OPERATION IS WITH BOTH EXHAUST AND MAKEUP AIR PASSING THROUGH THE ENERGY RECOVERY HEAT EXCHANGER; ECONOMIZER DAMPER CLOSED, ENERGY RECOVERY DAMPER OPEN.

1.7 ANY TIME THE AIR HANDLER IS INDEXED OFF, THE SUPPLY AND EXHAUST FANS SHALL STOP. IN ADDITION, WHENEVER THE AIR HANDLER IS OFF, THE FOLLOWING SHALL OCCUR:
A. OUTSIDE AND EXHAUST AIR DAMPERS SHALL CLOSE AND BE VERIFIED CLOSED.
B. DX COOLING COIL CONTROL VALVES SHALL CLOSE AND BE VERIFIED SHUT.
C. AIR COOLED CONDENSING UNIT SHALL SHUT DOWN.
D. HEATING COIL CONTROL VALVES SHALL REMAIN UNDER DISCHARGE AIR TEMPERATURE CONTROL.
E. IF NOT ALREADY IN THEIR NORMAL POSITION, ENERGY RECOVERY HEAT EXCHANGER DAMPERS SHALL RETURN TO NORMAL POSITION WITH ECONOMIZER DAMPER SHUT AND ENERGY RECOVERY DAMPER OPEN AND BE VERIFIED THROUGH END SWITCHES.

1.8 AIR HANDLING SYSTEM SHALL OPERATE CONTINUOUSLY WHENEVER THE BUILDING IS SCHEDULED FOR OCCUPANCY BY THE ECC. DURING UNOCCUPIED PERIODS SYSTEM SHALL BE CAPABLE OF OPERATING AT TEMPERATURE SETPOINTS SELECTED TO REDUCE OPERATING COST AND AT REDUCED AIRFLOWS AS LONG AS PRESSURE RELATIONSHIPS ARE MAINTAINED.

AHU SUPPLY AIR TEMPERATURE / HUMIDITY CONTROL:
2.1 SETPOINTS AND ALARM POINTS SHALL BE ADJUSTABLE THROUGH AND OUTPUT FROM ECC.

2.2 LOCAL CONTROL PANEL TO PROVIDE ABILITY TO MAKE SETPOINT AND ALARM POINT CHANGES TO ECC, AND PROVIDE SYSTEM AND EQUIPMENT STATUS AND ALARMS.

2.3 AIR HANDLING SYSTEM SHALL OPERATE AT CONSTANT VOLUME AIR FLOW. AIR HANDLING UNIT DISCHARGE AIR TEMPERATURE SHALL BE MAINTAINED AT THE HIGHEST TEMPERATURE POSSIBLE TO MINIMIZE HEAT REQUIRMENTS OF ZONE VALVES. ZONE HEAT VALVES SHALL BE MONITORED FOR POSITION WITH THE INTENT OF HAVING AT LEAST ONE ZONE OPERATING WITHOUT THE NEED FOR ZONE HEAT.

SIMULTANEOUSLY, RETURN AIR HUMIDITY SHALL BE MONITORED. SHOULD RETURN AIR RELATIVE HUMIDITY RISE TO EQUIVALENT OF 50% RH AT 75 DEG. F. [24°C] (ADJUSTABLE), CONTROL SYSTEM SHALL PROVIDE ADDITIONAL DX COOLING AS REQUIRED TO REDUCE RETURN AIR RELATIVE HUMIDITY.

ZONE HEAT COILS SHALL PROVIDE HEAT TO SPACE TEMPERATURE SETPOINT. SHOULD ALL ZONES BE CALLING FOR HEAT, AND RETURN AIR HUMIDITY IS ACCEPTABLE, REDUCE DX COOLING AND INCREASE AIR HANDLING UNIT LEAVING AIR TEMPERATURE USING PREHEAT COIL, UNTIL AT LEAST ONE ZONE COIL IS NOT CALLING FOR HEAT AND RETURN AIR RELATIVE HUMIDITY IS WITHIN SPECIFICATION.

PROVIDE ADDITIONAL STAGES OF DX COOLING AS REUIRED TO PROVIDE REQUIRED DEHUMIDIFICATION.

2.4 SUPPLY AIR TEMPERATURE IN SUPPLY DUCT, SHALL BE MAINTAINED AT SETPOINT (70 DEG. F. [21°C] WINTER, 75 DEG. F. [24°C] SUMMER (ADJUSTABLE) VIA ECC BY SEQUENTIALLY MODULATING STEAM SUPPLY TO THE PREHEAT LOOP STEAM TO FLUID HEAT EXCHANGER AND CONTROLLING THE NUMBER OF STAGES OF DX COOLING BEING PROVIDED.

2.5 ALARM AT 5 DEG. F. [3°C] (ADJUSTABLE) ABOVE SUMMER AND BELOW WINTER SETPOINTS.

2.6 SUPPLY AIR RELATIVE HUMIDITY IN SUPPLY DUCT, SHALL BE THAT REQUIRED TO MAINTAIN EXHAUST AIR RELATIVE HUMIDITY BETWEEN MAXIMUM AND MINIMUM VALUES OF 55 % RH SUMMER AND 25% RH WINTER (BOTH ADJUSTABLE) VIA ECC BY CONTROLLING THE NUMBER OF STAGES OF DX COOLING OPERATING FOR DEHUMIDIFICATION, AND MODULATING THE STEAM DISPERSION TUBE STEAM CONTROL VALVES TO PROVIDE HUMIDIFICATION.

REFER TO STEAM HUMIDIFIER CONTROL SEQUENCE.

ALARM AT 5 % RH. (ADJUSTABLE) ABOVE SUMMER AND BELOW WINTER SETPOINTS AS DETERMINED BY MONITORING OF EXHAUST AIR RELATIVE HUMIDITY.

FREEZE PROTECTION:
3.1 SETPOINTS AND ALARM POINTS SHALL BE ADJUSTABLE THROUGH AND OUTPUT FROM ECC.

3.2 LOCAL CONTROL PANEL TO PROVIDE ABILITY TO MAKE SETPOINT AND ALARM POINT CHANGES TO ECC, AND PROVIDE SYSTEM AND EQUIPMENT STATUS AND ALARMS.

3.5 IF THE SUPPLY AIR TEMPERATURE AS SENSED DOWNSTREAM OF THE HEATING COIL FALLS BELOW 40°F [4.4°C] (ADJUSTABLE), AN ALARM SIGNAL SHALL BE INITIATED BY THE ECC.

3.6 IF THE SUPPLY AIR TEMPERATURE AS SENSED DOWNSTREAM OF THE HEATING COIL BELOW 35°F [1.7°C] (ADJUSTABLE), THE SUPPLY AND EXHAUST FANS SHALL SHUT DOWN AND A CRITICAL ALARM SHALL INDICATE AT THE LOCAL CONTROL PANEL AND ECC.

ENERGY RECOVERY HEAT EXCHANGER CONTROL:
4.1 SETPOINTS AND ALARM POINTS SHALL BE ADJUSTABLE THROUGH AND OUTPUT FROM ECC.

4.2 LOCAL CONTROL PANEL TO PROVIDE ABILITY TO MAKE SETPOINT AND ALARM POINT CHANGES TO ECC, AND PROVIDE SYSEM AND EQUIPMENT STATUS AND ALARMS.

4.3 ENERGY HEAT EXCHANGER TO BE CONTROLLED IN ACCORDANCE WITH THE FOLLOWING:
A. COOLING:
IF ENTHALPY OUTDOOR AIR > ENTHALPY RETURN AIR AND DEW POINT TEMPERATURE OF OUTSIDE AIR > TARGET DEW POINT TEMPERATURE OF CONDITIONED AIR; USE ENERGY RECOVERY HEAT EXCHANGER AND THEN PROVIDE ADDITIONAL REQUIRED COOLING STAGING THE DX COOLING COIL.

IF OUTDOOR AIR DRY BULB TEMPERATURE > RETURN AIR DRY BULB TEMPERATURE AND DEW POINT TEMPERATURE OF OUTSIDE AIR < TARGET DEW POINT TEMPERATURE OF CONDITIONED AIR; USE ENERGY RECOVERY HEAT EXCHANGER AND THEN PROVIDE ADDITIONAL REQUIRED COOLING STAGING THE DX COOLING COIL.
B. HEATING:
IF DRY BULB TEMPERATURE OF OUTDOOR AIR < DRY BULB TEMPERATURE OF CONDITIONED AIR AND DEW POINT TEMPERATURE OF OUTDOOR AIR < TARGET DEW POINT TEMPERATURE OF CONDITIONED AIR; USE ENERGY RECOVERY HEAT EXCHANGER AND THEN PROVIDE ADDITIONAL REQUIRED HEATING USING THE PREHEAT COIL.

IF DRY BULB TEMPERATURE OF OUTSIDE AIR < CRITICAL DRY BULB TEMPERATURE (DETERMINED FROM CONDITIONED AND RETURN AIR DRY BULB TEMPERATURES AND EFFECTIVENESS OF THE ENERGY RECOVERY DEVICE) AND DEW POINT TEMPERATURE OF CONDITIONED AIR < CRITICAL DEW POINT TEMPERATURE OF CONDITIONED AIR (DETERMINED FROM CONDITIONED AND RETURN AIR DEW POINT TEMPERATURES AND EFFECTIVENESS OF THE ENERGY RECOVERY DEVICE); USE ENERGY RECOVERY HEAT EXCHANGER AND THEN PROVIDE ADDITIONAL REQUIRED HEATING USING THE PREHEAT COIL.
C. ENERGY RECOVERY HEAT EXCHANGER OFF (ECONOMIZER OPERATION):
IF DRY BULB TEMPERATURE OF CONDITIONED AIR < DRY BULB TEMPERATURE OUTSIDE AIR < DRY BULB TEMPERATURE RETURN AIR, AND DEW POINT TEMPERATURE OF OUTDOOR AIR < DEW POINT TEMPERATURE OF AIR HANDLER SUPPLY AIR TARGET (CONDITIONED AIR); STOP THE FLOW OF RETURN AIR THROUGH THE ENERGY RECOVERY HEAT EXCHANGER, PROVIDE STAGING OF DX COOLING AND PREHEAT COIL OPERATION AS REQUIRED TO MAINTAIN DISCHARGE AIR TEMPERATURE CONTROL.

IF ENTHALPY OF OUTSIDE AIR < ENTHALPY OF RETURN AIR AND DEW POINT TEMPERATURE OF OUTDOOR AIR > DEW POINT TEMPERATURE OF AIR HANDLER SUPPLY AIR TARGET (CONDITIONED AIR); STOP THE ENERGY RECOVERY HEAT EXCHANGER, PROVIDE STAGING OF DX COOLING AND PREHEAT COIL OPERATION AS REQUIRED TO MAINTAIN DISCHARGE AIR TEMPERATURE CONTROL.

WHEN ENERGY RECOVERY HEAT EXCHANGER IS BEING BYPASSED, EXHAUST FAN STATIC PRESSURE CONTROL SHALL REDUCE FAN SPEED TO ACCOUNT FOR THE REDUCED SYSTEM PRESSURE LOSS BECAUSE EXHAUST AIR IS NO LONGER PASSING THROUGH THE HEAT EXCHANGER..

ENERGY RECOVERY HEAT EXCHANGER FROST CONTROL:
5.1 FOLLOW ENERGY RECOVERY HEAT EXCHANGER MANUFACTURER RECOMENDATIONS. SYNTHETIC FLAT PLATE HEAT EXCHANGERS CAN TYPICALLY OPERATE THROUGH CONDITIONS WHERE ENERGY RECOVERY HEAT EXCHANGER AND OTHER STYLE FLAT PLATE HEAT EXCHANGERS REQUIRE LIMITING ENERGY RECOVERY TO PREVENT FROSTING OF THE RETURN AIR AT THE ENERGY RECOVERY DEVICE. THIS SHOULD NOT BE THE CASE WITH A SYNTHETIC (ENTHALPIC) FLAT PLATE ENERGY RECOVERY HEAT EXCHANGER.

AIR HANDLING UNIT PREHEAT COIL CONTROL:
6.1 SETPOINTS AND ALARM POINTS SHALL BE ADJUSTABLE THROUGH AND OUTPUT FROM ECC.

6.2 LOCAL CONTROL PANEL TO PROVIDE ABILITY TO MAKE SETPOINT AND ALARM POINT CHANGES TO ECC, AND PROVIDE SYSTEM AND EQUIPMENT STATUS AND ALARMS.

6.3 PREHEAT COIL OPERATES WITH CONSTANT FLOW OF USING PROPYLENE GLYCOL FOR FREEZE AND BURST PROTECTION.

WHEN THERE IS A CALL FOR HEATING AND WHEN THE OUTDOOR AIR TEMPERATURE IS BELOW 45 DEG. F. (ADJUSTABE) HEATING FLUID SHALL CIRCULATE CONSTANTLY THROUGH THE STEAM TO FLUID HEATER AND THE PREHEAT COIL.

1/3, 2/3 STEAM VALVES AT STEAM TO FLUID HEAT EXHANGER SHALL MODULATE TO MAINTAIN AIR HANDLING UNIT LEAVING AIR TEMPERATURE.

AIR HANDLING UNIT DX COIL CONTROL:
7.1 SETPOINTS AND ALARM POINTS SHALL BE ADJUSTABLE THROUGH AND OUTPUT FROM ECC.

7.2 LOCAL CONTROL PANEL TO PROVIDE ABILITY TO MAKE SETPOINT AND ALARM POINT CHANGES TO ECC, AND PROVIDE SYSTEM AND EQUIPMENT STATUS AND ALARMS.

7.3 DX COOLING COIL SHALL OPERATE THROUGH COMPRESSOR STAGING AS REQUIRED TO MAINTAIN LEAVING AIR TEMPERATURE CONTROL.

FOUR 25% STEPS OF DX COOLING SHALL BE USED AS REQUIRED TO MAINTAIN AIR HANDLING UNIT LEAVING AIR TEMPERATURE CONTROL.

CONTROL SYSTEM SHALL VERIFY AIR HANDLING SYSTEM SUPPLY FAN IS OPERATING PRIOR TO ENERGIZING DX SYSTEM COMRESSORS.

7.4 DX COOLING SYSTEM SHALL BE PROVIDED WITH FROST STAT TO MONITOR DX COIL TEMPERATURE OR SUCTION LINE TEMPERATURE AND TEMPORARILY (ADJUSTABLE TIME) TURN OFF COMPRESSOR TO ALLOW DX COIL TO WARM SHOULD A IT BE DETERMINED THAT OPERATING CONDITIONS ARE SUCH THAT THERE IS POTENTIAL FOR EVAPORATOR COIL FROSTING.

AHU AIR FLOW CONTROL:
8.1 SETPOINTS AND ALARM POINTS SHALL BE ADJUSTABLE THROUGH AND OUTPUT FROM ECC.

8.2 LOCAL CONTROL PANEL TO PROVIDE ABILITY TO MAKE SETPOINT AND ALARM POINT CHANGES TO ECC, AND PROVIDE SYSTEM AND EQUIPMENT STATUS AND ALARMS.

8.3 AHU SUPPLY AIR FLOW SHALL BE CONTROLLED BY THE ECC. ECC SHALL MODULATE THE SUPPLY FAN VFD TO MAINTAIN 1.0" [25 MM] OF DUCT STATIC PRESSURE (ADJUSTABLE) AS SENSED BY DUCT STATIC PRESSURE SENSOR. DUCT STATIC PRESSURE SETPOINT TO BE DETERMINED DURING TEST AND BALANCE WORK FOR MINIMAL DUCT PRESSURE LOSS; CRITICAL SPACE DUCT DAMPER FULL OPEN.

8.4 AHU EXHAUST AIR FLOW SHALL BE CONTROLLED BY THE ECC. ECC SHALL MODULATE THE EXHAUST FAN VFD TO MAINTAIN 0.75" [19 MM] OF DUCT STATIC PRESSURE (ADJUSTABLE) AS SENSED BY DUCT STATIC PRESSURE SENSOR. DUCT STATIC PRESSURE SETPOINT TO BE DETERMINED DURING TEST AND BALANCE WORK FOR MINIMAL DUCT PRESSURE LOSS; CRITICAL SPACE DUCT DAMPER FULL OPEN.

8.5 USING HIGH LIMIT DUCT PRESSURE SENSOR LOCATED IN THE SUPPLY AIR DISCHARGE DUCT ABOUT 6 FEET [1.8 M] DOWNSTREAM FROM AHU, ECC SHALL PREVENT THE SUPPLY FAN FROM DEVELOPING OVER 2" [50 MM] OF STATIC PRESSURE (ADJUSTABLE). IF STATIC PRESSURE AT HIGH LIMIT DOES EXCEED 2" [50 MM] THE SUPPLY AIR FAN SHALL STOP AND ECC SHALL ALARM, INCLUDING AT LOCAL CONTROL PANEL. HIGH LIMIT SHALL BE HARDWIRED TO THE SUPPLY FAN VFD. FAN SHALL SHUTDOWN IN HAND, AUTO, OR BYPASS MODE. HIGH LIMIT SHALL REQUIRE MANUAL RESET AT THE DEVICE.

8.6 USING LOW LIMIT DUCT PRESSURE SENSOR LOCATED IN THE EXHAUST AIR DUCT LOCATED ABOUT 6 FEET [1.8 M] UPSTREAM OF EXHAUST FAN (BETWEEN ENERGY RECOVERY HEAT EXCHANGER AND EXHAUST FAN, ECC SHALL PREVENT THE EXHAUST FAN FROM DEVELOPING OVER -3.5" [90 MM] OF STATIC PRESSURE (FIELD ADJUSTABLE). IF STATIC PRESSURE AT LOW LIMIT DOES EXCEED -3.5" [90 MM] THE EXHAUST AIR FAN SHALL STOP AND ECC SHALL ALARM, INCLUDING AT LOCAL CONTROL PANEL. HIGH LIMIT SHALL BE HARDWIRED TO THE EXHAUST FAN VFD. FAN SHALL SHUTDOWN IN HAND, AUTO, OR BYPASS MODE. HIGH LIMIT SHALL REQUIRE MANUAL RESET AT THE DEVICE.

EMERGENCY CONSTANT SPEED OPERATION:
9.1 UPON FAILURE OF THE VFD, THE SUPPLY AND RETURN FANS SHALL BE STARTED/STOPPED MANUALLY AT THE LOCAL CONTROL PANEL OR THE ECC THROUGH THE VFD BY-PASS STARTER. FANS SHALL THEN BE OPERATED AT CONSTANT SPEED.

SMOKE DETECTION SHUTDOWN/RESTART:
10.1 WHEN SMOKE IS DETECTED BY SUPPY OR EXHAUST AIR SMOKE DETECTORS, THE SUPPLY AND EXHAUST FANS SHALL SHUT "OFF" AND AN ALARM SIGNAL SHALL BE TRANSMITTED TO THE FIRE ALARM SYSTEM.

10.2 SMOKE DETECTORS SHALL BE HARDWIRED TO THE SUPPLY AND EXHAUST FAN VFDS AND TO SHUTDOWN IN HAND, AUTO, OR BYPASS MODE. SMOKE DETECTORS SHALL REQUIRE MANUAL RESET AT THE DEVICE.

10.3 SUPPLY AND RETURN FANS SHALL RESTART WHEN FIRE ALARM CIRCUIT IS RESET.

FIRE ALARM SHUTDOWN/RESTART:
11.1 UPON FIRE ALARM SYSTEM ALARM AIR HANDLING UNIT SHALL SHUT DOWN AS DESCRIBED ABOVE IN SMOKE DETECTION SHUTDOWN.

11.2 ECC SHALL BE PROVIDED WITH INPUT FROM FIRE ALARM SYSTEM USED TO NOTIFY EEC THAT FIRE ALARM CONDITION EXISTS.

FILTERS:
12.1 SETPOINTS AND ALARM POINTS SHALL BE ADJUSTABLE THROUGH AND OUTPUT FROM ECC.

12.2 LOCAL CONTROL PANEL TO PROVIDE ABILITY TO MAKE SETPOINT AND ALARM POINT CHANGES TO ECC, AND PROVIDE SYSTEM AND EQUIPMENT STATUS AND ALARMS.

12.3 THE AIR HANDLING UNIT IS PROVIDED WITH TWO PREFILTERS AND AN AFTER FILTER.

12.4 THE ENERGY RECOVERY HEAT EXCHANGER IS PROVIDED WITH PREFILTERS FOR BOTH AIR STREAMS.

12.5 ALL FILTERS SHALL BE PROVIDED WITH DIFFERENTIAL PRESSURE SENSING; PROVIDING INDIVIDUAL FILTER BANK PRESSURE LOSS.

12.6 ECC SHALL PROVIDE CALL FOR FILTER CHANGE AT FILTER DIFFERENTIAL PRESSURE OF 0.75" H2O [19MM] (ADJUSTABLE).

12.7 DATE OF FILTER CHANGE TO BE INPUT FROM LOCAL CONTROL PANEL. ECC TO MAINTAIN AND PROVIDE DATES OF LAST FOUR FILTER CHANGES WITH INFORMATION AVAILABLE AT LOCAL CONTROL PANEL.

AHU-1 WITH ENERGY RECOVERY INPUT/OUTPUT SUMMARY

SYSTEM, APPARATUS OR AREA POINT DESCRIPTION	INPUTS – ANALOG – MEASURED: TEMPERATURE	RELATIVE HUMIDITY	STATIC PRESSURE	DIFFERENTIAL PRESSURE	AIR FLOW (CFM)	VALVE/DAMPER POSITION	INPUTS – DIGITAL: CURRENT	TEMPERATURE SWITCH	RELATIVE HUMIDITY SWITCH	PRESSURE SWITCH	FLOW SWITCH	END SWITCH	CURRENT SWITCH	AUXILIARY CONTACTS	SMOKE DETECTOR	FREEZE STAT	STATUS	OUTPUTS – ANALOG: VALVE MODULATION	DAMPER CONTROL	VFD MODULATION	SET POINT ADJUST.	OUTPUTS – DIGITAL: START/STOP	OPEN/CLOSE	HIGH/LOW	SYSTEM FEATURES – ALARMS: HIGH ANALOG	LOW ANALOG	HIGH DIGITAL	LOW DIGITAL	PROOF	PROGRAMS: TIME SCHEDULING	DEMAND LIMITING	DUTY CYCLE	START/STOP OPT.	ENTHALPY OPT.	SMOKE CNE.	TREND	ALARM INSTRUCT	MAINT. (WRK. ORD.)	NOTES
OUTSIDE AIR DAMPER											X						X							X																INTERLOCK WITH SUPPLY FAN
EXHAUST AIR DAMPER											X						X							X																INTERLOCK WITH EXHAUST FAN
HEAT EXCHANGER DAMPER											X						X							X																
HEAT EXCHANGER BYPASS DAMPER											X						X							X																
AHU ENABLE START/STOP PROOF																	X						X							X										
OUTSIDE AIR TEMPERATURE	X																																				X			
OUTSIDE AIR RELATIVE HUMIDITY		X																																			X			
OUTSIDE AIR TEMPERATURE (DOWNSTREAM OF AAHX)	X																																				X			
OUTSIDE AIR RELATIVE HUMIDITY (DOWNSTREAM OF AAHX)		X																																			X			
SUPPLY AIR TEMPERATURE (SAT) (DOWNSTREAM COOL COIL)	X																				X					X											X			
OUTSIDE AIR FILTER				X																																		X		HARDWIRED TO FANS
SUPPLY AIR TEMP (SAT)	X																				X					X	X										X			
SUPPLY AIR RELATIVE HUMIDITY DOWNSTREAM COILS		X																			X					X	X										X			
SUPPLY AIR HUMIDITY DOWNSTREAM HUMIDIFIER								X																																
SUPPLY AIR RELATIVE HUMIDITY HIGH LIMIT								X																																
SAT DOWNSTREAM HUMIDIFIER	X																																				X			
EXHAUST AIR TEMPERATURE (UPSTREAM OF AAHX)	X																																				X			
EXHAUST AIR RELATIVE HUMIDITY (UPSTREAM OF AAHX)		X																			X																X			
EXHAUST AIR TEMPERATURE (DOWNSTREAM OF AAHX)	X																																				X			
EXHAUST AIR RELATIVE HUMIDITY (DOWNSTREAM OF AAHX)		X																																			X			
EXHAUST AIR FILTER				X																																		X		
OUTSIDE AIR FILTER FILTER 1,2				X																																		X		2 SETS FILTERS
GLYCOL-WATER SUPPLY TEMP						X													X																					2 VALVES
DX COOLING COIL STAGE 1,2						X													X																					2 VALVES, USED FOR COOLING AND HEATING
DX COIL FROST STAT								X																																COMPRESSOR CONTROL
HUMIDIFICATION																	X		X			X	X																	BACNET
SUPPLY AIR SMOKE DETECTOR														X																								X		INTERFACE WITH FIRE ALARM, HARDWIRE TO FANS
EXHAUST AIR SMOKE DETECTOR														X																								X		INTERFACE WITH FIRE ALARM, HARDWIRE TO FANS
SUPPLY HIGH PRESSURE SWITCH										X																		X										X		HARDWIRE TO FAN
EXHAUST LOW PRESSURE SWITCH										X																			X									X		HARDWIRE TO FAN
AHU SUPPLY FAN START/STOP																							X																	
AHU SUPPLY FAN VFD CONTROL																				X																				
AHU SUPPLY FAN STATUS													X																											
AHU SUPPLY FAN VFD TROUBLE																	X																					X		
AHU EXHAUST FAN START/STOP																							X																	
AHU EXHAUST FAN VFD CONTROL																				X																				
AHU EXHAUST FAN STATUS													X																											
AHU EXHAUST FAN VFD TROUBLE																	X																					X		
SUPPLY DUCT STATIC PRESSURE			X																		X																X			
EXHAUST DUCT STATIC PRESSURE			X																		X																X			
FIRE ALARM SYSTEM																	X																					X		

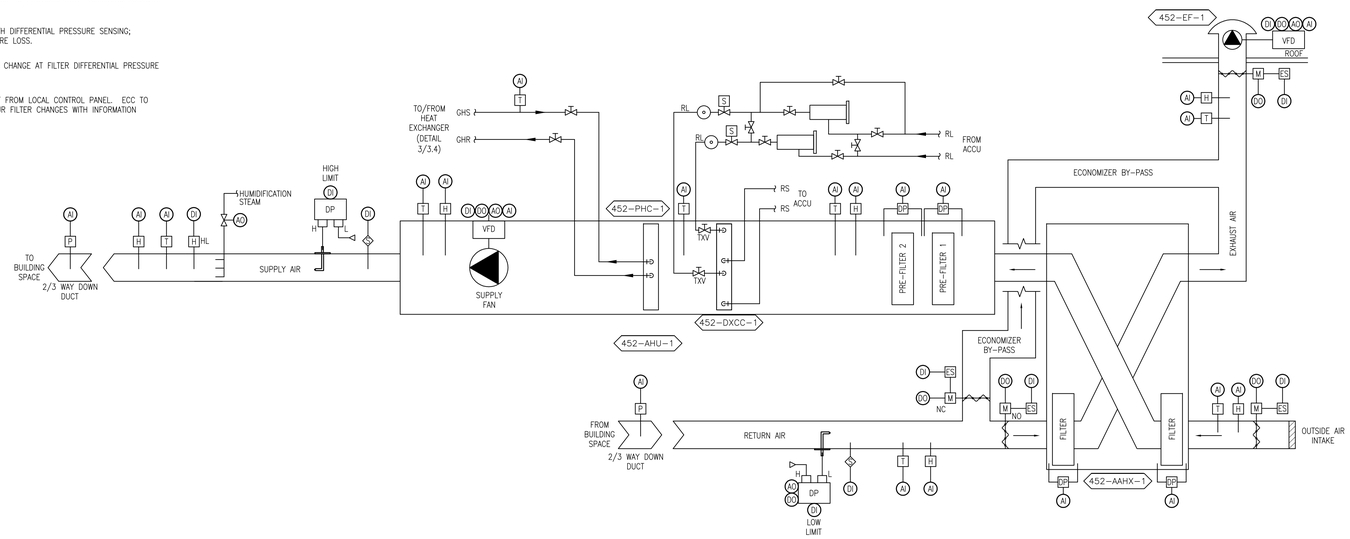

1 AHU-1 WITH ENERGY RECOVERY - CONTROL DIAGRAM
NTS

FULLY SPRINKLED

Revisions:	Date

CONSULTANTS:
MEP ASSOCIATES, LLC
engineers | consultants | commissioning
MEP Associates, LLC | 2720 Arbor Court | Eau Claire, WI 54701
Phone: 715.832.5680 | Fax: 715.832.5668 | www.mepassociates.com
MEP PROJECT NO.: A18.13.07

ARCHITECT/ENGINEERS:
ANDERSON ENGINEERING
ENGINEERING • ARCHITECTURE • LAND SURVEYING
ENVIRONMENTAL SERVICES • LANDSCAPE ARCHITECTURE
Anderson Engineering of Minnesota, LLC
13605 1st Avenue North
Suite 100
Plymouth, MN 55441
763-412-4000 (o) 763-412-4090 (f)
www.ae-mn.com

Drawing Title: MECHANICAL CONTROL DETAILS (CONT.)
Approved: Project Director
Project Title: CORRECT GAP DEFICIENCIES AT SPS
Location: VA MEDICAL CENTER TOMAH WI
Date: 12-17-2013 | Checked: JAM | Drawn: CMW
Project Number: 676-13-106
Building Number: 452
Drawing Number: M-452-3.5
Dwg. 21 of 27

Office of Construction and Facilities Management
Department of Veterans Affairs

VA FORM 08-6231 (MAR 2012)

HVAC DESIGN DATA

DESIGN CONDITIONS	SUMMER TEMP °F	SUMMER TEMP [°C]	SUMMER WET BULB TEMP °F	SUMMER WET BULB TEMP [°C]	SUMMER % HUMIDITY	WINTER TEMP °F	WINTER TEMP [°C]	WINTER DEWPOINT TEMP °F	WINTER DEWPOINT TEMP [°C]	WINTER % HUMIDITY	LOWEST AVERAGE ANNUAL DEWPOINT °F	LOWEST AVERAGE ANNUAL DEWPOINT [°C]
OUTDOOR DESIGN CONDITIONS	92.1	[33]	75.1	[24]	46	-12.3	[-25]	-25	[-32]	40	-	
INDOOR AREA DESIGN CONDITIONS												
ANTE ROOM	-	-	-	-	-	-	-	-	-	-		
CORRIDOR	75.0	[24]	65.3	[19]	60	70	[21]	27	[-3]	20		
STORAGE	-	-	-	-	-	-	-	-	-	-		
CLEAN LINEN	-	-	-	-	-	-	-	-	-	-		
OFFICE	75.0	[24]	65.3	[19]	60	70	[21]	27	[-3]	20		
TOILET	-	-	-	-	-	-	-	-	-	-		
LOCKER	-	-	-	-	-	-	-	-	-	-		
LOCKER SHOWER	-	-	-	-	-	-	-	-	-	-		
HAC	-	-	-	-	-	-	-	-	-	-		
TOWEL & WRAP	-	-	-	-	-	-	-	-	-	-		
BREAKOUT & RECEIVING	72.0	[22]	62.8	[17]	60	72	[22]	28.7	[-2]	20		
CART WASH	75.0	[24]	-	-	-	70	[21]	-	-	-		
CARTS	72.0	[22]	62.8	[17]	60	72	[22]	28.7	[-2]	20		
DECONTAMINATION	72.0	[22]	62.8	[17]	60	72	[22]	28.7	[-2]	20		
PREP	72.0	[22]	62.8	[17]	60	72	[22]	28.7	[-2]	20		
CLEAN & STERILE	72.0	[22]	62.8	[17]	60	72	[22]	28.7	[-2]	20		
BULK STORAGE	73.0	[23]	62.4	[17]	55	73	[23]	29.9	[-1]	20		
LOADING DOCK	-	-	-	-	-	60	[16]	-	-	-		
MECHANICAL / AIR HANDLING EQUIP ROOM	84.0	[29]	-	-	-	50	[10]	-	-	-		

ROOM AIR BALANCE SCHEDULE

ROOM NO	ROOM NAME	AIR HANDLING UNIT NO	TERMINAL UNIT	INDIVIDUAL ROOM TEMP CONTROL	SUPPLY ROOM AIR FLOW CFM	SUPPLY ROOM AIR FLOW L/S	SUPPLY # OF AIR DEVICES	SUPPLY AIR DEVICE MARK	SUPPLY SUPPLY FAN	RETURN OR EXHAUST RETURN OR EXHAUST (R/E)	RETURN OR EXHAUST ROOM AIR FLOW CFM	RETURN OR EXHAUST ROOM AIR FLOW L/S	RETURN OR EXHAUST # OF AIR DEVICES	RETURN OR EXHAUST AIR DEVICE MARK	RETURN OR EXHAUST RETURN OR EXHAUST FAN	ROOM AIR FLOW CV	ROOM AIR FLOW VAV	ROOM AIR BALANCE	NET INFILTRATION CFM	NET INFILTRATION [L/s]	NET EXFILTRATION CFM	NET EXFILTRATION [L/s]	REMARKS
1	CORRIDOR / SUITE ANTE	452-AHU-1	452-BC-3	N	110	[52]	1	CD-1	452-SF1	-	0	[ ]	0	-	-	X	-	+	0	[ ]	110	[52]	ANTE ROOM
2	STORAGE	452-AHU-1	452-BC-3	N	85	[40]	1	CD-1	452-SF1	-	0	[ ]	0	-	-	X	-	+	0	[ ]	85	[40]	----
3	CLEAN LINEN	452-AHU-1	452-BC-3	N	50	[24]	1	CD-1	452-SF1	-	0	[ ]	0	-	-	X	-	+	0	[ ]	50	[24]	----
4	OFFICE	452-AHU-1	452-BC-3	Y	140	[66]	1	CD-1	452-SF1	E	140	[66]	1	EG-1	452-EF-1	X	-	o	0	[ ]	0	[ ]	----
5	OFFICE	452-AHU-1	452-BC-3	N	140	[66]	1	CD-1	452-SF1	E	140	[66]	1	EG-1	452-EF-1	X	-	o	0	[ ]	0	[ ]	----
6	TRAINING	452-AHU-1	452-BC-3	N	140	[66]	1	CD-1	452-SF1	E	140	[66]	1	EG-1	452-EF-1	X	-	o	0	[ ]	0	[ ]	----
7	RECEIVING / CORRIDOR	452-AHU-1	452-BC-4, 452-CUH-1	Y	460	[220]	2	CD-1	452-SF1	E	390	[180]	1	EG-1	452-EF-1	X	-	+	0	[ ]	70	[33]	----
8	BULK STORAGE	452-AHU-1	452-BC-1	Y	750	[350]	3	CD-1	452-SF1	E	750	[350]	1	EG-1	452-EF-1	X	-	o	0	[ ]	0	[ ]	----
9	CLEAN & STERILE	452-AHU-1	452-BC-2	Y	720	[340]	2	CD-1	452-SF1	E	600	[280]	2	TG-1	452-EF-1	X	-	+	0	[ ]	120	[57]	HUMIDITY SENSOR FOR CONTROL
10	PREP	452-AHU-1	452-BC-5	Y	1160	[550]	2	CD-1	452-SF1	E	820	[390]	2	TG-2	452-EF-1	X	-	++	0	[ ]	340	[160]	HUMIDITY SENSOR FOR TREND
11	TOWEL WRAP	452-AHU-1	452-BC-4	N	65	[31]	1	CD-1	452-SF1	-	0	[ ]	0	-	-	X	-	+	0	[ ]	65	[31]	----
12	HAC	-	-	N	0	[ ]	-	-	-	E	95	[45]	1	EG-1	452-EF-1	X	-	--	95	[45]	0	[ ]	----
13	DECONTAMINATION TOILET / SHOWER / LOCKER - MEN	452-AHU-1	452-BC-4	N	90	[42]	1	CD-1	452-SF1	E	165	[78]	1	EG-1	452-EF-1	X	-	--	75	[35]	0	[ ]	----
14	DECONTAMINATION	452-AHU-1	452-BC-9	Y	620	[290]	2	CD-1	452-SF1	E	800	[380]	1	EG-1	452-EF-1	X	-	--	180	[85]	0	[ ]	----
15, 15A	VESTIBULE / CARTS	452-AHU-1	452-BC-10	N	220	[100]	1	CD-1	452-SF1	E	110	[52]	1	EG-2	452-EF-1	X	-	+	0	[ ]	110	[52]	TRANSFER TO DECONTAMINATION AND CART WASH, ANTE
15B	CART WASH	-	-	N	0	[ ]	0	-	-	E	275	[130]	1	EG-2	452-EF-1	X	-	-	275	[130]	0	[ ]	NORMAL OPERATION
15B	CART WASH	-	-	N	0	[ ]	0	-	-	E	495	[230]	1	EG-2	452-EF-2	X	-	-	495	[230]	0	[ ]	WITH CART WASH EXHAUST FAN
16	DECONTAMINATION LOCKER - WOMEN	452-AHU-1	452-BC-4	N	200	[94]	1	CD-1	452-SF1	E	280	[130]	0	-	-	X	-	-	80	[38]	0	[ ]	TRANSFER TO DECONTAMINATION TOILET / SHOWER - WOMEN
16A	DECONTAMINATION TOILET / SHOWER - WOMEN	-	-	N	0	[ ]	0	-	-	E	280	[130]	1	EG-1	452-EF-1	X	-	--	280	[130]	0	[ ]	TRANSFER 200 FROM DECONTAM LOCKER - WOMEN
18	VESTIBULE - DECONTAMINATION ANTE	-	-	N	0	[ ]	0	-	-	-	0	[ ]	0	-	-	X	-	-	0	[ ]		[ ]	----
	OFFICE 1	452-AHU-1	452-BC-6	Y	70	[33]	1	CD-1	452-SF1	E	70	[33]	1	EG-1	452-EF-1	X	-	o	0	[ ]	0	[ ]	----
	OFFICE 2	452-AHU-1	452-BC-8	Y	70	[33]	1	CD-1	452-SF1	E	70	[33]	1	EG-1	452-EF-1	X	-	o	0	[ ]	0	[ ]	----
	MEETING / BREAKROOM	452-AHU-1	452-BC-7	Y	160	[76]	2	CD-2	452-SF1	E	160	[76]	1	EG-1	452-EF-1	X	-	o	0	[ ]	0	[ ]	----
	LOADING DOCK	452-AHU-1	452-HWUH-2	N	0	[ ]	0	-	-	-	0	[ ]	0	-	-	-	-	o	0	[ ]	0	[ ]	----
8A	MECHANICAL	-	452-UH-1	Y	0	[ ]	0	-	-	E	2300	[1100]	0	-	452-EF-3	-	-	-	2300	[1100]	0	[ ]	OA DAMPER OPENS TO PROVIDE MAKEUP WHEN EF-3 OPERATES

NOTE

ROOMS OR AREAS DO NOT HAVE INDIVIDUAL HUMIDITY CONTROL UNLESS NOTED.

STEAM TRAP SCHEDULE

MARK	LOCATION	SYSTEM AND/OR SERVICE	CAPACITY AT MIN DIFF PRESS LBS/HR	CAPACITY AT MIN DIFF PRESS [kg/HR]	MIN DIFF PRESS PSI	MIN DIFF PRESS [kPa]	MIN INLET PRESS PSI	MIN INLET PRESS [kPa]	TRAP TYPE	TRAP SIZE IN	TRAP SIZE [mm]	REMARKS
452-ST1	452 MECH 8A	HEADER	2050	[930]		[ ]		[ ]	SERIES H	1.5	[38]	
				[ ]		[ ]		[ ]			[ ]	

FULLY SPRINKLED

Revisions:	Date

CONSULTANTS:

MEP ASSOCIATES, LLC
engineers | consultants | commissioning
MEP Associates, LLC | 2720 Arbor Court | Eau Claire, WI 54701
Phone: 715.832.5680 | Fax: 715.832.5668 | www.mepassociates.com
MEP PROJECT NO.: A18.13.07

ARCHITECT/ENGINEERS:

ANDERSON ENGINEERING
ENGINEERING • ARCHITECTURE • LAND SURVEYING
ENVIRONMENTAL SERVICES • LANDSCAPE ARCHITECTURE

Anderson Engineering of Minnesota, LLC
13605 1st Avenue North
Suite 100
Plymouth, MN 55441
763-412-4000 (o) 763-412-4090 (f)
www.ae-mn.com

Drawing Title: MECHANICAL SCHEDULES

Approved: Project Director

Project Title: CORRECT GAP DEFICIENCIES AT SPS

Location: VA MEDICAL CENTER TOMAH WI

Date: 12-17-2013 | Checked: JAM | Drawn: CMW

Project Number: 676-13-106

Building Number: 452

Drawing Number: M-452-4.1

Dwg. 22 of 27

Office of Construction and Facilities Management

Department of Veterans Affairs

VA FORM 08-6231 (MAR 2012)

PRINTED: 10/7/2013 FILE: U:\676\ Anderson Engineering of Minnesota, LLC\A18.13.07 - St. Croix Correct Gap Deficiencies\CD-Set\Drawings\M-452-4.1 MECH SCHEDULES.dwg

STEAM HUMIDIFER SCHEDULE

MARK	LOCATION	SYSTEM AND/OR SEVICE	HUMIDIFIER TYPE	AIR FLOW		# OF MANIFOLDS	EAT						LAT		SOURCE	STEAM						CONTROL TYPE	TRAP			REMARKS
							Db		Wb		DEWPOINT		DEWPOINT			PRESS ENT VALVE		PRESS ENT HEATER		FLOW			MARK	CAPACITY		
				CFM	[L/s]		°F	[°C]	°F	[°C]	°F	[°C]	°F	[°C]		PSIG	[kPa]	PSIG	[kPa]	LBS/HR	[kg/HR]			LBS/HR	[kg/HR]	
452-H1	452 MECH 8A	452-AHU1	DUCT-MOUNTED DISPERSION TUBE	6195	[2900]	-	70	[21]	-		-		-		CLEAN STEAM	15	[100]	8	[55]	173	[79]	-	1-TP7	500	[230]	1
					[ ]												[ ]		[ ]		[ ]				[ ]	

REMARKS

1. EXISTING HUMIDIFIER INFORMATION FROM ORIGINAL CONSTRUCTION DOCUMENT SCHEDULES, LISTED FOR REFERENCE ONLY.

***REFERENCES AIR HANDLING UNIT SCHEDULE.

FAN SCHEDULE

MARK	LOCATION	AREA AND/OR BLDG SERVED	SYSTEM AND/OR SERVICE	AIR FLOW		TSP		FAN									MOTOR ELECTRICAL								CONTROL SEQUENCE	REMARKS
								TYPE	WHEEL	CLASS	ARRANGEMENT, ROTATION, AND DISCHARGE	DIAMETER		MIN % EFF	DRIVE	FAN MAX RPM	NOMINAL POWER			PHASE	VOLT	RPM	SPEED CONTROL			
				CFM	[L/s]	IN	[Pa]					IN	[mm]				BHP	HP	[kW]							
452-SF1	452 MECH 8A	452	452-AHU1	6000	[2800]	5.7	[1400]	CENT, TOP FRNT DISCHARGE	AF	II	ARR 3, CW ROTATION, TH DISCHARGE	15	[380]	60%	BELT	2900	9.57	10	[8]	3	208	1800	VARIABLE		CONSTANT	2, 3, 4, 5
452-EF1	452 ROOF	452	452-AHU1	6000	[2800]	4.5	[1100]	POWER ROOF VENTILATOR	BI	-	PRV	27	[680]	63%	BELT	1491	5.67	10	[8]	3	208	1750	VARIABLE		CONSTANT	2, 3
452-EF2	452 ROOF	452 CART WASH	452 CART WASH	500	[240]	0.5	[130]	POWER ROOF VENTILATOR	-	-	PRV	-	-	-	BELT	-	-	0.333	[ ]	1	120	1750	CONSTANT		WALL SWTCH CART WASH	1
452-EF3	452 ROOF	452 MECH 8A	452 MECH 8A	2300	[1100]	0.5	[130]	POWER ROOF VENTILATOR	-	-	PRV	-	-	-	BELT	-	-	0.5	[ ]	3	208	1750	CONSTANT		TSTAT	1
					[ ]		[ ]						[ ]						[ ]							

NOTE

ALL SELECTIONS ARE BASED ON AN ALTITUDE OF 660.

REMARKS

1. EXISTING FAN INFORMATION FROM ORIGINAL CONSTRUCTION DOCUMENT SCHEDULES, LISTED FOR REFERENCE ONLY.
2. UNIT MOUNTED DISCONNECT.
3. PROVIDE UNIT (AHU) MOUNTED VFD, VFD RATED MOTOR.
4. FAN TSP BASED ON PROVIDING AHU OVERALL 2.75" ESP, 1.5" DISCHARGE, 1.25" INLET.
5. 18" ROOF INSULATED ROOF CURB.

***REFERENCES AIR HANDLING UNIT SCHEDULE.

AIR TO AIR PLATE HEAT EXCHANGER SCHEDULE

MARK	LOCATION	SYSTEM AND/OR SERVICE	MODE	MIN SUPPLY AIR EFF %	SUPPLY AIR																EXHAUST AIR																REMARKS
					SUPPLY AIR FLOW		APD		EAT				LAT				EXHAUST AIR FLOW		APD		EAT				LAT											
									Db		Wb		Db		Wb						Db		Wb		Db		Wb									
					CFM	[L/s]	IN	[Pa]	°F	[°C]	°F	[°C]	°F	[°C]	°F	[°C]	CFM	[L/s]	IN	[mm]	°F	[°C]	°F	[°C]	°F	[°C]	°F	[°C]								
452-AAHX-1	452 MECH 8A	452-AHU1	COOLING	58%	6000	[2800]	1.25	[310]	95	[35]	78	[26]	78	[26]	74	[23]	6000	[2800]	1.25	[31]	75	[24]	62	[17]	90	[32]	67	[19]								1,2
			HEATING	58%	6000	[2800]	1.25	[310]	-20	[-29]	30	[-1]	60	[16]	44	[7]	6000	[2800]	1.25	[31]	72	[22]	55	[13]	46	[8]	44	[7]								
						[ ]		[ ]										[ ]		[ ]																

REMARKS

1. MINIMMUM 2" THICK PLEATED FILTERS, MERV 8 AHEAD OF THE HEAT RECOVERY PLATES ON BOTH EXHAUST AND SUPPLY AIR SIDE.
2. PROVIDE MANUFACTURER'S TOOL FOR REMOVAL OF FILTERS.
3

***REFERENCES AIR HANDLING UNIT SCHEDULE.

AIR FILTER SCHEDULE

MARK	LOCATION	AREA AND/OR BLDG SERVED	SYSTEM AND/OR SERVICE	MIN MERV RATING	AIR FLOW		APD				HOUSING TYPE	CARTRIDGES			ARRANGEMENT	REMARKS
							INITIAL		CHANGEOVER			#	SIZE			
					CFM	[L/s]	IN	[mm]	IN	[mm]			IN	[mm]		
452-PF1	452 MECH 8A	452	452-AHU1	7	6000	[2800]	0.26	[7]	1	[25]	SIDE	6	16 x 20 x 2	[410 x 510 x 50]	--	-----
452-PF2	452 MECH 8A	452	452-AHU1	11	6000	[2800]	0.28	[7]	1	[25]	SIDE	6	16 x 20 x 4	[410 x 510 x 100]	-	----
452-AF1	452 MECH 8A	452	452-AHU1	14	6000	[2800]	0.33	[8]	1.2	[30]	SIDE	5	2-12 x 24 x 12 3- 20 x 20 x 12	2-[300 x 610 x 300] 3-[510 x 510 x 300]	-	----
452-PF3	452 MECH 8A	452	452-AAHX1 MAKEUP	7	6000	[2800]	0.15	[4]	0.5	[13]	TOP	8	20 x 20 x 2	[510 x 510 x 50]	-	-----
452-PF-4	452 MECH 8A	452	452-AAHX1 EXHAUST	7	6000	[2800]	0.15	[4]	0.5	[13]	TOP	8	20 x 20 x 2	[510 x 510 x 50]	-	-----

REMARKS

1

***REFERENCES AIR HANDLING UNIT SCHEDULE.

SINGLE DUCT AIR TERMINAL UNIT SCHEDULE

MARK	LOCATION	AREA AND/OR ROOM SERVED	SYSTEM AIR HANDLING	SIZE	AIR FLOW				ADDITIONAL SOUND ATTUNATION REQUIRED	CONTROL TYPE	CONTROL SEQUENCE	REHEAT			PERIMETER SUPPLEMENTAL HEAT LINK	REMARKS
					MAX		MIN									
					CFM	[L/s]	CFM	[L/s]				HW	ELEC	NONE		
452-TU-1-1	PREP 10	PREP 10	452-AHU1	H	1160	[550]	1160	[550]	NONE	CV	ROOM AIRFLOW	-	-	-	-	1
452-TU-1-2	DECON 14	DECON 14	452-AHU1	G	850	[400]	450	[210]	NONE	CV	ROOM AIRFLOW	-	-	-	-	1
						[ ]		[ ]								

REMARKS

1. DUCT MOUNTED ZONE HEAT COIL.

AIR TERMINAL UNIT SIZING SCHEDULE

SIZE	MIN ALLOWABLE AIR FLOW		MAX ALLOWABLE AIR FLOW		DUCT INLET SIZE		MAX APD		MAXIMUM SOUND POWER LEVEL (Re: 10^{-12} WATTS) FOR BOX DISCHARGE AT MAXIMUM INLET DUCT						REMARKS
									OCTAVE BANDS						
	CFM	[L/s]	CFM	[L/s]	IN	[mm]	IN WG	[Pa]	2	3	4	5	6	7	
G	350	[170]	1050	[500]	10	[250]	0.4	[100]	74	68	61	57	54	52	----
H	500	[240]	1500	[710]	12	[300]	0.4	[100]	73	69	64	59	57	53	----

NOTES

1. INLET STATIC BASED ON ARI 885-98.
2. THIS SCHEDULE IS USED WITH THE TERMINAL UNIT SCHEDULE.
3. CONTROL SEQUENCE SHALL BE AS INDICATED ON THE AIR TERMINAL UNIT SCHEDULE.
4. PROVIDE SOUND ATTENUATION AFTER-SECTION AS REQUIRED TO MEET ROOM NC LEVEL.

AIR DEVICE SCHEDULE (SUPPLY)

MARK	TYPE	MOUNTING	PANEL/FRAME SIZE		NECK SIZE		DAMPER	FINISH	NOTES
			IN x IN	[mm x mm]	IN	[mm]			
452-CD-1	LOUVERED FACE	LAY-IN CEILING	24 x 24	[600 x 600]	SEE DWG	[305 ø]	DUCT	WHITE	1

NOTES

1. PROVIDE SQUARE TO ROUND ADAPTER.

AIR DEVICE SCHEDULE (RETURN)

MARK	TYPE	MOUNTING	PANEL/FRAME SIZE		NECK SIZE		NC	DAMPER	FINISH	REMARKS
			IN x IN	[mm x mm]	IN x IN	[mm x mm]				
425-RG-1	EGG CRATE	LAY-IN CEILING	24 x 24	[600 x 600]	SEE DWG	[152 DIAM]	13	DUCT	WHITE	-----

NOTE

PROVIDE SQUARE TO ROUND ADAPTER.

AIR HANDLING UNIT SCHEDULE

MARK	LOCATION	AREA AND/OR BLDG SERVED	TYPE	AIR FLOW	AIR FLOW						SUPPLY FAN MARK	RETURN OR RELIEF FAN MARK	EXHAUST FAN MARK	PREFILTER MARK	AFTER FILTER MARK	FINAL FILTER MARK	HEAT RECOVERY MARK	PREHEAT COIL MARK	COOLING COIL MARK	AIR COOLED COND UNIT	REHEAT COIL	HUMIDIFIER MARK
					SUPPLY		MIN OA		RETURN													
					CFM	[L/s]	CFM	[L/s]	CFM	[L/s]												
452-AHU-1	452 MECH 8A	452	INDOOR AIR HANDLER	CV	6000	[2800]	6000	[2800]	0	[ ]	452-SF5	-	-	452-PF1, 2	452-AF1	-	N/A	452-PHC1	452-DXCC1	452-ACCU1	-	452-H1
						[ ]		[ ]		[ ]												
						[ ]		[ ]		[ ]												

REMARKS

1. PROVIDE VFD FOR SUPPY FAN, LOOSE FOR CONTRATOR MOUNTING.
2. PLAN AND COORDINATE SHIPPING SPLITS FOR ACCESS THROUGH DOUBLE DOORS TO MECHANICAL SPACE.
3. AHU OVERALL ESP 2.75", 1.5" DISCHARGE, 1.25" INLET.
4
4
5
6

FULLY SPRINKLED

Revisions: | Date

CONSULTANTS:

MEP ASSOCIATES, LLC
engineers | consultants | commissioning
MEP Associates, LLC | 2720 Arbor Court | Eau Claire, WI 54701
Phone: 715.832.5680 | Fax: 715.832.5668 | www.mepassociates.com
MEP PROJECT NO.: A18.13.07

ARCHITECT/ENGINEERS:

ANDERSON ENGINEERING
ENGINEERING • ARCHITECTURE • LAND SURVEYING
ENVIRONMENTAL SERVICES • LANDSCAPE ARCHITECTURE

Anderson Engineering of Minnesota, LLC
13605 1st Avenue North
Suite 100
Plymouth, MN 55441
763-412-4000 (o) 763-412-4090 (f)
www.ae-mn.com

Drawing Title: MECHANICAL SCHEDULES

Approved: Project Director

Project Title: CORRECT GAP DEFICIENCIES AT SPS

Location: VA MEDICAL CENTER TOMAH WI

Date: 12-17-2013 | Checked: JAM | Drawn: CMW

Project Number: 676-13-106

Building Number: 452

Drawing Number: M-452-4.2

Dwg. 23 of 27

Office of Construction and Facilities Management

Department of Veterans Affairs

VA FORM 08-6231 (MAR 2012)

PRINTED: 9/12/2013 FILE: I:\(A18) Anderson Engineering of Minnesota, LLC\A18.13.07 VA Tomah Correct Gap Deficiencies\03-CAD Drawings\M-452-4.1 MECH SCHEDULES.dwg

three inches = one foot; one and one half inches = one foot; one inch = one foot; three quarters inch = one foot; one half inch = one foot; three eighths inch = one foot; one quarter inch = one foot; one eighth inch = one foot

AIR COOLED CONDENSING UNIT SCHEDULE (AIR CONDITIONING SERVICE)

MARK	LOCATION	AREA AND/OR BLDG SERVED	SYSTEM AND/OR SERVICE	TYPE	MIN REFRIGERATION		REFRIGERANT	MAX SUCTION TEMP @ COMP		OA TEMP		MIN EER	IPLV	COMPRESSOR MOTOR					CONDENSER FAN MOTOR					REMARKS
														# COMP	NOMINAL POWER		PHASE	VOLT	# FANS	NOMINAL POWER		PHASE	VOLT	
					MBH	[kW]		°F	[°C]	°F	[°C]				HP	[kW]				HP	[W]			
452-ACCU-1	EXIST PAD ON GRADE	452	452-AHU-1	SCROLL	445	[1500]	410A	47	[8]	95	[35]	11.7	-	4	-	#VALUE!	3	230	4	1	[750]	1	120	1, 2, 3, 4, 5, 6, 7, 8, 9, 10, 11
						[ ]										[ ]					[ ]			

NOTES

1. UL-RATED NON FUSED DISCONNECT SHALL BE FURNISHED BY MANUFACTURER OF EQUIPMENT.
2. EER, IPLV INCLUDES CONDENSER FANS, AND COMTROLS.
3. PROVIDE MANUFACTURER RECOMMENDED VIBRATION ISOLATION FOR MOUNTING ENCLOSURE TO PAD.
4. PROVIDE MINIMUM OF TWO COMPLETELY SEPARATE REFRIGERANT CIRCUITS, WITH A MINUMUM OF TWO COMPRESSORS FOR EACH CIRCUIT.
5. PROVIDE LIQUID LINE SOLENOID AND SERVICE VALVES, CRANK CASE HEATERS.
6. PROVIDE ON / OFF TIME DELAYS, PHASE LOSS, REVERSAL, LOW VOLTAGE MONITOR.
7. SELECTION BASED ON OPERATION AT 95 DEG. F. AMBIENT, UNIT CAPABLE OF OPERATION TO 115 DEG. F. AMBIENT.
8. CAPABLE OF OPERATION TO 40 DEG. F. AMBIENT.
9. FIELD FROST STAT TO LOCK OUT COMPRESSOR AS REQUIRED TO PREVENT DX COIL FROSTING.
10. MATCHED WITH 452-DXCC1, 30% BLEED THERMAL EXPANSION VALVES REQUIRED BY INSTALLER.
11. MANUFACTURER TO REVIEW AND APPROVE REFRIGERANT PIPING DESIGN AND ROUTING.

***REFERENCES AIR HANDLING UNIT SCHEDULE.

HOT WATER UNIT HEATER SCHEDULE

MARK	LOCATION	AREA AND/OR BLDG SERVED	TYPE UNIT	AIR FLOW		MIN CAPACITY		TEMPERATURES				FLOW		WPD		CONTROL SEQUENCE	MOTOR					REMARKS
								EAT		EWT							POWER		PHASE	VOLT	RPM	
				CFM	[L/s]	BTUH	[W]	°F	[°C]	°F	[°C]	GPM	[L/s]	FT	[Pa]		HP	[W]				
452-UH1	10	452 MECH 8A	HORIZONTAL	550	[260]	12500	[3700]	60	[16]	200	[93]	2	0.13	0.06	[2]	T STAT	0.25	[190]	1	115	-	1
452-CUH-1		452 RECEIVING	CABINET IN CEILING	685	[320]	45000	[13000]	60	[16]	200	[93]	2.3	0.15	5	[130]	T STAT	2 @ 0.1	[2 @ 75]	1	115	-	1
452-HWUH2	8A	452 DOCK	HORIZONTAL	370	[170]	16200	[4700]	60	[16]	200	[93]	1.7	0.11	0.8	[20]	T STAT	1/25	[30]	1	115	1550	
					[ ]		[ ]						0.00		[ ]			[ ]				

REMARKS

1. EXISTING UNIT HEATER INFORMATION FROM ORIGINAL CONSTRUCTION DOCUMENT SCHEDULES, LISTED FOR REFERENCE ONLY.

AIR FLOW CONTROL VALVE SCHEDULE

MARK	LOCATION	SYSTEM AND/OR SERVICE	TYPE	SIZE		DESIGN AIR FLOW		MAX AIR FLOW		APD AT MAX AIR FLOW		CONTROL TYPE	CONNECT TO ECC	APPLICATION	REMARKS
				IN	[mm]	CFM	[L/s]	CFM	[L/s]	IN WG	[Pa]				
451-AFCV1	PREP 10	405-AHU1	CV	10	[250]	820	[390]	820	[390]	0.4	[100]	ROOM PRESS	YES	DECONTAM ROOM	----
405-AFCV2	PREP 10	405-AHU1	CV	10	[250]	810	[380]	810	[380]	0.4	[100]	ROOM PRESS	YES	PREP ROOM	
					[ ]		[ ]		[ ]		[ ]				

NOTE

LOW PRESSURE VALVES, MINIMUM PRESSURE FOR OPERATION 0.3 IN H2O.

HOT WATER HEATING COIL SCHEDULE

MARK	LOCATION	AREA AND/OR BLDG SERVED	SYSTEM AND/OR SERVICE	APPLICATION	AIR FLOW		MAX FACE VELOCITY		APD		TEMPERATURES				TOTAL MIN CAPACITY		HOT WATER								% GLYCOL	REMARKS
											EAT		LAT				FLOW		EFT		LFT		FPD			
					CFM	[L/s]	FPM	[M/s]	IN WG	[Pa]	°F	[°C]	°F	[°C]	MBH	[kW]	GPM	[L/s]	°F	[°C]	°F	[°C]	FT	[kPa]		
452-BC-1	BULK STOER 8	BULK STORE 8	452-AHU1	ZONE HEAT	750	[350]	375	[2]	0.2	[50]	53	[12]	104	[40]	42	[140]	2.9	[ ]	200	[93]	172	[78]	8	[24]	0	1
452-BC-2	OFFICE 1	CLEAN STERILE 9	452-AHU1	ZONE HEAT	720	[340]	290	[2]	.2	[50]	53	[12]	83	[28]	23	[78]	3.4	[ ]	200	[93]	187		8	[24]	0	1
452-BC-3	BREAK REC 10	OFFICES	452-AHU1	ZONE HEAT	665	[310]	450	[2]	.2	[50]	53	[12]	104	[40]	37	[130]	2.5	[ ]	200	[93]	171		8	[24]	0	3
452-BC-4	BREAK REC 10	INTERIOR	452-AHU1	ZONE HEAT	815	[380]	450	[2]	.2	[50]	53	[12]	93	[34]	36	[120]	3	[ ]	200	[93]	176		8	[24]	0	3
452-BC-5	PREP 10	PREP 10	452-AHU1	ZONE HEAT	1160	[550]	390	[2]	.2	[50]	53	[12]	83	[28]	104	[350]	3.9	[ ]	200	[93]	147		8	[24]	0	1
452-BC-6	OFFICE 1	OFFICE 1	452-AHU1	ZONE HEAT	70	[33]	280	[1]	.2	[50]	53	[12]	90	[32]	3	[10]	.3	[ ]	200	[93]	182		8	[24]	0	1
452-BC-7	BULK STORE 8	BREAK ROOM	452-AHU1	ZONE HEAT	160	[76]	220	[1]	.2	[50]	53	[12]	90	[32]	7	[24]	.7	[ ]	200	[93]	182		8	[24]	0	1
452-BC-8	OFFICE 2	OFFICE 2	452-AHU1	ZONE HEAT	70	[33]	280	[1]	.2	[50]	53	[12]	90	[32]	3	[10]	.3	[ ]	200	[93]	182		8	[24]	0	1
452-BC-9	DECONTAM 14	DECONTAM 14	452-AHU1	ZONE HEAT	620	[290]	380	[2]	.2	[50]	53	[12]	82	[28]	55	[190]	3.5	[ ]	200	[93]	169		8	[24]	0	4
452-BC-10	DECONTAM 14	CART 15, 15A, 15B	452-AHU1	ZONE HEAT	220	[100]	330	[2]	.2	[50]	53	[12]	97	[36]	11	[38]	.8	[ ]	200	[93]	174		8	[24]	0	4
452-PHC-1	452 MECH 8A	452	452-AHU1	AHU PREHEAT	6000	[2800]	488	[3]	.167	[42]	-20	[-29]	75	[24]	618	[2100]	32.7	[2]	180	[82]	140	[60]	5	[15]	33	2, 5, 7
452-PHC-1	452 MECH 8A	452	452-AHU1	AHU PREHEAT	6000	[2800]	488	[3]	.167	[42]	43	[6]	75	[24]	209	[710]	32.7	[2]	-		-		5	[15]	33	2, 6, 7

REMARKS

1. EXISTING ZONE HEAT COIL INFORMATION FROM ORIGINAL CONSTRUCTION DOCUMENT SCHEDULES, REBALANCE.
2. HEATING COIL CORRECTIONS HAVE BEEN APPLIED FOR GPM, FPD, EFT, LFT FOR A 33% PROPYLENE GLYCOL / WATER FLUID.
3. COIL REPLACES EXISTING.
4. NEW COIL.
5. WITHOUT HEAT RECOVERY.
6. WITH HEAT RECOVERY.
7. TWO ROW COIL, WITH TURBULATORS.

EXPANSION TANK SCHEDULE

MARK	LOCATION	SYSTEM AND/OR SERVICE	TYPE	APPROX SYSTEM VOLUME		SYSTEM TEMPERATURE RANGE				INITIAL PRESSURE IN TANK		MAX OPERATING PRESSURE		FILL PRESSURE AT TANK				MIN VOLUME TANK		MIN BLADDER VOLUME		PIPE SIZE TO TANK		COLD WATER FILL SIZE		REMARKS
						MIN		MAX						RELIEF VALVE		AT TANK										
				GAL	[L]	°F	[°C]	°F	[°C]	PSIG	[kPa]	PSIG	[kPa]	PSIG	[kPa]	PSIG	[kPa]	GAL	[L]	GAL	[L]	IN	[mm]	IN	[mm]	
452-ET1	452 MECH 8A	HEATING WATER	HORIZONTAL COMPRESSION	-	-	60	[16]	200	[93]	10	[69]	70	[480]	30	[210]	70	[480]	15	[57]	-	-	-	#VALUE!	0.75	[19]	
452-ET2	452 MECH 8A	HEATING WATER	HORIZONTAL COMPRESSION	-	-	60	[16]	200	[93]	10	[69]	70	[480]	30	[210]	70	[480]	15	[57]	-	-	-	#VALUE!	0.75	[19]	2
452-ET3	452 MECH 8A	405-AHU1 PREHEAT	HORIZONTAL COMPRESSION	-	#VALUE!	50	[10]	200	[93]	10	[69]	70	[480]	30	[210]	70	[480]	24	[91]	-	-	1	[25]	-	-	3
					[ ]						[ ]		[ ]		[ ]		[ ]		[ ]		[ ]		[ ]		[ ]	

REMARKS

1. EXISTING EXPANSION TANK, PROVIDE SAME SIZE TANK PIPED IN PARALLEL WITH EXISTING.
2. PROVIDE EXPANSION TANK, SAME SIZE AS EXISTING, PIPED IN PARALLEL WITH EXISTING.
3. VALVED SITE GAUGE AND TANK FITTING.

STEAM TO WATER HEAT EXCHANGER SCHEDULE

MARK	LOCATION	AREA AND/OR BLDG SERVED	SYSTEM AND/OR SERVICE	TYPE	WATER CONDITIONS								STEAM PRESSURE				CONTROL VALVE		TRAP			REMARKS
					FLOW		EWT		LWT		WPD		ENT CONTROL VALVE		ENT HEAT EXCHANGER				TRAP #	CAPACITY		
					GPM	[L/s]	°F	[°C]	°F	[°C]	FT	[kPa]	PSIG	[kPa]	PSIG	[kPa]	LBS/HR	[kg/HR]		LBS/HR	[kg/HR]	
452-HE1	452 MECH 8A	452	HEATING WATER	SHELL & TUBE	19	[1]	165	[74]	200	[93]	0.2	[1]	30	[210]	10	[69]	335	[150]	1-TP2	670	[300]	1
452-SWHX2	452 MECH 8A	452	452-AHU1 PREHEAT	SHELL & TUBE	35	[2]	140	[60]	181.1	[83]	2.99	[9]	15	[100]	7	[48]	701		1-TP1	2050		2, 3
						[ ]						[ ]		[ ]		[ ]						

REMARKS

1. EXISTING STEAM TO WATER HEAT EXCHANGER INFORMATION FROM ORIGINAL CONSTRUCTION DOCUMENT SCHEDULES, LISTED FOR REFERENCE ONLY.
2. HEATEXCHANGER CORRECTIONS HAVE BEEN APPLIED FOR GPM, FPD, EFT, LFT FOR A 33% PROPYLENE GLYCOL / WATER FLUID.
3. FOUR PASS.

DIRECT EXPANSION COOLING COIL SCHEDULE

MARK	LOCATION	AREA AND/OR BLDG SERVED	SYSTEM AND/OR SERVICE	AIR FLOW		MAX FACE VELOCITY		APD		EAT				LAT				TOTAL CAPACITY		SENSIBLE CAPACITY		REFRIGERANT	SATURATED SUCTION TEMP		REMARKS
										Db		Wb		Db		Wb									
				CFM	[L/s]	FPM	[M/s]	IN WG	[Pa]	°F	[°C]	°F	[°C]	°F	[°C]	°F	[°C]	MBH	[kW]	MBH	[kW]		°F	[°C]	
452-DXCC-1	452 MECH 8A	452	452-ACCU1, 452-AHU1	6000	[2800]	500	[1]	0.65	160	93	[34]	75	[24]	53	[12]	52	[11]	454	[1500]	260	[890]	410A	40	[4]	1, 3, 4, 5
452-DXCC-1	452 MECH 8A	452	452-ACCU1, 452-AHU1	6000	[2800]	500	[1]	0.65	160	80.4	[27]	68.9	[21]	53	[12]	52	[11]	308	[1100]	178	[610]	410A	40	[4]	2, 3, 4, 5
					[ ]		[ ]		0										[ ]		[ ]				

REMARKS:

1. WITHOUT HEAT RECOVERY.
2. WITH HEAT RECOVERY.
3. 6 ROW, DUAL CIRCUIT, FACE SPLIT.
4. FIELD FROST STAT TO LOCK OUT COMPRESSOR AS REQUIRED TO PREVENT DX COIL FROSTING.
5. MATCHED WITH 452-ACCU1, 30% BLEED THERMAL EXPANSION VALVES REQUIRED BY INSTALLER.

***REFERENCES AIR HANDLING UNIT SCHEDULE.

PUMP SCHEDULE

MARK	LOCATION	AREA AND/OR BLDG SERVED	SYSTEM AND/OR SERVICE	TYPE	CIRCULATING FLUID									SP GR	MIN % EFF	ELECTRICAL MOTOR						REMARKS
					FLUID	FLOW		HEAD		NPSH AVAILABLE		TEMPERATURE				NOMINAL POWER		PHASE	VOLT	MAX RPM	SPEED CONTROL	
						GPM	[L/s]	FT	[kPa]	FT	[kPa]	°F	[°C]			HP	[kW]					
452-P1	452 MECH 8A	452	HEATING WATER	INLINE	BUILDING HEATING WATER	19	[1]	13	[210]	N/A	N/A	200	[93]	1	-	0.1666667	[ ]	-	-	1750	CONSTANT	1
452-P2	452 MECH 8A	452	405-AHU-1 PREHEAT COIL	INLINE	33% PROPYLENE GLYCOL	220	[14]	40	[640]	N/A	N/A	160	[71]	1	66	5	[4]	1	115	1750	CONSTANT	2
							[ ]		[ ]		N/A						[ ]					

REMARKS

1. EXISTING PUMP INFORMATION FROM ORIGINAL CONSTRUCTION DOCUMENT SCHEDULES, LISTED FOR REFERENCE ONLY.
2. PUMP CORRECTIONS HAVE BEEN APPLIED FOR A 33% PROPYLENE GLYCOL / WATER FLUID.

AIR SEPARATOR SCHEDULE

MARK	LOCATION	SYSTEM AND/OR SERVICE	TYPE	AIR SEPARATOR							REMARKS
				SIZE IN		FLOW		WPD		BUILT-IN STRAINER REQ'D	
				IN	[mm]	GPM	[L/s]	FT	[kPa]		
452-AS1	452 MECH 8A	HEATING WATER	-	-	-	19	-	-	-	-	1
452-AS2	452 MECH 8A	HEATING WATER	FULL FLOW TANGENTIAL	2	[50]	38	[2]	1.8	[5]	YES	---
					[ ]		[ ]		[ ]		

REMARKS

1. EXISTING.

FULLY SPRINKLED

Revisions: | Date

CONSULTANTS:

MEP ASSOCIATES, LLC
engineers | consultants | commissioning
MEP Associates, LLC | 2720 Arbor Court | Eau Claire, WI 54701
Phone: 715.832.5680 | Fax: 715.832.5668 | www.mepassociates.com
MEP PROJECT NO.: A18.13.07

ARCHITECT/ENGINEERS:

ANDERSON ENGINEERING
ENGINEERING • ARCHITECTURE • LAND SURVEYING
ENVIRONMENTAL SERVICES • LANDSCAPE ARCHITECTURE

Anderson Engineering of Minnesota, LLC
13605 1st Avenue North
Suite 100
Plymouth, MN 55441
763-412-4000 (o) 763-412-4090 (f)
www.ae-mn.com

Drawing Title: MECHANICAL SCHEDULES

Approved: Project Director

Project Title: CORRECT GAP DEFICIENCIES AT SPS

Location: VA MEDICAL CENTER TOMAH WI

Date: 12-17-2013 | Checked: JAM | Drawn: CMW

Project Number: 676-13-106

Building Number: 452

Drawing Number: M-452-4.3

Dwg. 24 of 27

Office of Construction and Facilities Management

Department of Veterans Affairs

VA FORM 08-6231 (MAR 2012)

PRINTED: 9/12/2013 FILE: I:\(A18) Anderson Engineering of Minnesota, LLC\A18.13.07 VA Tomah Correct Gap Deficiencies\03-CAD Drawings\M-452-4.1 MECH SCHEDULES.dwg

GENERAL ELECTRICAL NOTES

1. ALL WORK SHALL BE IN CONFORMANCE WITH NATIONAL, STATE, AND LOCAL CODES AND/OR ORDINANCES.
2. CONTRACTOR SHALL COORDINATE WORK WITH ALL OTHER CONTRACTORS PRIOR TO INSTALLATION.
3. SEE ARCHITECTURAL, MECHANICAL, & PLUMBING DRAWINGS FOR ADDITIONAL REQUIREMENTS.
4. ELECTRICAL DRAWINGS ARE DIAGRAMMATIC ONLY. THEY ARE INTENDED TO GIVE APPROXIMATE LOCATIONS AND OVERALL DESIGN INTENT. CONTRACTOR SHALL BE RESPONSIBLE FOR PRODUCTS, MATERIALS, AND ELECTRICAL METHODS WHICH HAVE NOT BEEN SHOWN OR INDICATED BUT ARE REQUIRED FOR A COMPLETE SYSTEM TO THE STANDARDS OF THE INDUSTRY.
5. INSTALL LIGHTING FIXTURES IN ACCORDANCE WITH MANUFACTURER'S RECOMMENDATIONS. PROVIDE SUPPORTING DEVICES FOR ADEQUATE SUPPORT OF FIXTURES FROM STRUCTURE.
6. UPON COMPLETION OF THE ELECTRICAL WORK, THE INSTALLATION SHALL BE TESTED FOR CONTINUITY, GROUNDS, AND SHORT CIRCUITS. CONTRACTOR SHALL DEMONSTRATE PROPER PERFORMANCE OF ALL SYSTEMS. ALL DEFECTIVE WORK OR MATERIALS SHALL BE REPLACED OR REPAIRED AS NECESSARY AND RETESTED.
7. ELECTRICAL RACEWAYS THAT PENETRATE FIRE RATED ASSEMBLIES SHALL BE SLEEVED AND SEALED AS PER THE LOCAL BUILDING CODE.
8. CONTRACTOR SHALL PROVIDE A TEMPORARY ELECTRICAL SYSTEM FOR THE PROJECT. AT LEAST ONE 120 VOLT SINGLE PHASE RECEPTACLE SHALL BE PROVIDED FOR EACH 500 SQUARE FEET OF FLOOR SPACE. SUFFICIENT TEMPORARY LIGHTING SHALL BE PROVIDED TO ALLOW ALL CONTRACTORS TO COMPLETE THEIR WORK. TEMPORARY ELECTRICAL CIRCUITS SHALL BE EQUIPPED WITH COMBINATION GROUND FAULT INTERRUPTER AND CIRCUIT BREAKER PER NEC. TEMPORARY ELECTRICAL SYSTEM SHALL BE INCLUDED IN THIS BID. EXISTING POWER AND LIGHTING SHALL BE UTILIZED FOR TEMPORARY SERVICE.

ELECTRICAL ABBREVIATIONS

AFF	ABOVE FINISH FLOOR	MCA	MINIMUM CIRCUIT AMPS
AFG	ABOVE FINISH GRADE	MDP	MAIN DISTRIBUTION PANEL
CC	CONTROLS CONTRACTOR	MTD	MOUNTED
EC	ELECTRICAL CONTRACTOR	OCC	OCCUPANCY
EF	EXHAUST FAN	PC	PLUMBING CONTRACTOR
EM	EMERGENCY	PNL	PANEL
EX	EXISTING	UH	UNIT HEATER
EXR	EXISTING RELOCATED	WP	WEATHER PROOF
GC	GENERAL CONTRACTOR	20A	20 AMP
HP	HORSEPOWER	ø	PHASE
LV	LOW VOLTAGE	3W	3 WIRE
MC	MECHANICAL CONTRACTOR	20/1	20 AMP SINGLE PHASE

ELECTRICAL SYMBOLS LEGEND

RECEPTACLES

- 20A, 120V, 2P, 3W GROUNDING DUPLEX RECEPTACLE
- QUADPLEX RECEPTACLE
- GFCI DUPLEX RECEPTACLE
- GFCI DUPLEX RECEPTACLE – WEATHERPROOF NEMA 3R WHILE IN-USE COVERPLATE

COMMUNICATIONS

- W — WALL JACK – TELEPHONE, HEIGHT AS SHOWN (1) CAT6 CABLE
- WALL MOUNTED SPEAKER

SECURITY

- CCTV — CLOSED CIRCUIT CAMERA (CCC)
- PB — PUSH BUTTON
- KP — KEY PAD
- RX — REQUEST TO EXIT

LIGHTING

- 2X4 TROFFER STYLE FIXTURE, TYPE AS NOTED
- FIXTURE ON EMERGENCY POWER
- RECESSED/DOWNLIGHT FIXTURE
- WALL MTD FIXTURE
- EXIT SIGN (ARROWS INDICATED AS SHOWN) – (SHADING INDICATES # OF FACES)
- INDUSTRIAL STYLE FIXTURE

SWITCHING

- $ — 20A, 120/277V SPST SWITCH
- $3 — 20A, 120/277V 3-WAY SWITCH
- $4 — 20A, 120/277V 4-WAY SWITCH

FIRE ALARM

- F — MANUAL PULL STATION 46" A.F.F. CENTER
- F 30 — HORN/STROBE 82" A.F.F. TO CENTER CANDELA RATING
- S 8 — STROBE ONLY 82" A.F.F. TO CENTER CANDELA RATING TO REMAIN EXISTING
- SMOKE DETECTOR
- HEAT DETECTOR
- DUCT DETECTOR

POWER

PROVIDE SEPARATE NEUTRALS FOR ALL 277V & 120V CIRCUITS.

- PANEL BOARD
- NON-FUSED, 3-POLE, HEAVY DUTY, 60/3 DISCONNECT
- NON-FUSED, 3-POLE, 60/3 COMBINATION STARTER
- OVERHEAD 3-BUTTON DOOR CONTROL STATION
- J-BOX
- VFD — VARIABLE FREQUENCY DRIVE (INTEGRAL DISCONNECT)
- DIRECT ELECTRICAL CONNECTION OR SPECIAL PURPOSE RECEPTACLE
- MOTOR CONNECTION
- $MS — MOTOR STARTER TOGGLE SWITCH
- $ — MOTOR RATED TOGGLE SWITCH

GENERAL

XX-XX-X
- TYPICAL UNIT NO.
- EQUIPMENT NUMBER
- EQUIPMENT ABBREVIATION
- BUILDING NO. WHERE EQUIPMENT IS LOCATED.

LIGHT FIXTURE SCHEDULE

TYPE	DESCRIPTION	MANUFACTURER	REFERENCE CATALOG #	LAMPS	VOLTS
A	4FT 2 LAMP INDUSTRIAL FIXTURE, PLASTIC HOUSING WITH IMPACT RESISTANT LENS, PROGRAMMED RAPID START ELECTRONIC BALLAST WITH .88 BALLAST FACTOR, 25W T8 LAMPS, SURFACE MOUNT HARDWARE AS REQUIRED.	METALUX OR APPROVED EQUAL	VT3-232DR-UNV-ER81 X X	2-25W T8 4000K	UNV
B	EXTERIOR WALL BRACKET FIXTURE, DIE CAST ALUMINUM HOUSING, BRONZE FINISH, INTEGRAL PHOTOCELL, -40 DEG C COLD WEATHER DRIVER. MOUNT FIXTURE AT +12" ABOVE TOP OF DOOR FRAME. ON/OFF CONTROL VIA INTERNAL PHOTO-CELL.	RAB	WPLED20/PC	20W LED 5000K 70CRI	UNV
	SINGLE FACE EXIT SIGN, UNIVERSAL ARROWS AND MOUNTING, WHITE DIE CAST ALUMINUM HOUSING WITH RED LETTERS, LED LAMPING, MATCH EXISTING BUILDING EXIT LIGHT IN ADJACENT AREA IF POSSIBLE.	McPHILBEN SURE-LITES DUAL LITE	55L X X	3.5W LED	UNV

GENERAL NOTES:
1. PROVIDE MASTER/SATELLITE CONFIGURATION WHERE APPLICABLE.
2. PROVIDE SINGLE OR DUAL BALLASTED FIXTURES PER LAYOUT. MULTI-TAP BALLASTS ACCEPTABLE.
3. ALL 4' T8 LAMPS SHALL BE A FOCUS ON ENERGY QUALIFIED HIGH PERFORMANCE T8 LAMP.
4. ALL BALLAST FOR 4' T8 LAMPS SHALL BE A FOCUS ON ENERGY QUALIFIED HIGH PERFORMANCE T8 BALLAST.
5. ALL FIXTURES WITH THE LETTER "E" AFTER THEIR TYPE WILL BE SUPPLIED WITH BATTERY BACKUP RATED AT 90 MINUTES OF OPERATING TIME.

SYMBOL LINEWEIGHT LEGEND

LIGHT SOLID LINES	= EXISTING DEVICE(S) TO REMAIN
HEAVY, DASHED LINES	= EXISTING DEVICE(S) TO BE REMOVED
HEAVY, SOLID LINES	= NEW DEVICE(S) TO BE INSTALLED

ELECTRICAL SHEET INDEX

E-452-0.1	ELECTRICAL GENERAL NOTES, SCHEDULES, SYMBOLS AND ABBREVIATIONS
E-452-1.0	PARTIAL FLOOR PLAN ELECTRICAL – DEMOLITION
E-452-1.1	PARTIAL FLOOR PLAN ELECTRICAL – NEW

FULLY SPRINKLED

BID DOCUMENTS	12/19/2012
Revisions	Date

CONSULTANTS:
MEP ASSOCIATES, LLC
engineers | consultants | commissioning
MEP Associates, LLC | 2720 Arbor Court | Eau Claire, WI 54701
Phone: 715.832.5680 | Fax: 715.832.5668 | www.mepassociates.com
MEP PROJECT NO.: A18.13.07

ARCHITECT/ENGINEERS:
ANDERSON ENGINEERING
ENGINEERING • ARCHITECTURE • LAND SURVEYING
ENVIRONMENTAL SERVICES • LANDSCAPE ARCHITECTURE
Anderson Engineering of Minnesota, LLC
13605 1st Avenue North
Suite 100
Plymouth, MN 55441
763-412-4000 (o) 763-412-4090 (f)
www.ae-mn.com

Drawing Title: ELECTRICAL GENERAL NOTES, SCHEDULES SYMBOLS AND ABBREVIATIONS

Approved: Project Director

Project Title: CORRECT GAP DEFICIENCIES AT SPS

Location: VA MEDICAL CENTER TOMAH WI

Date: 12-17-2013 | Checked: PCC | Drawn: PCC

Project Number: 676-13-106

Building Number: 452

Drawing Number: E-452-0.1

Dwg. 25 of 27

Office of Construction and Facilities Management

Department of Veterans Affairs

VA FORM 08-6231 (MAR 2012)

PRINTED: 12/20/2013 FILE: V:\Revit\VA_MVU-452-01 LEED TEG_SPED.rvt

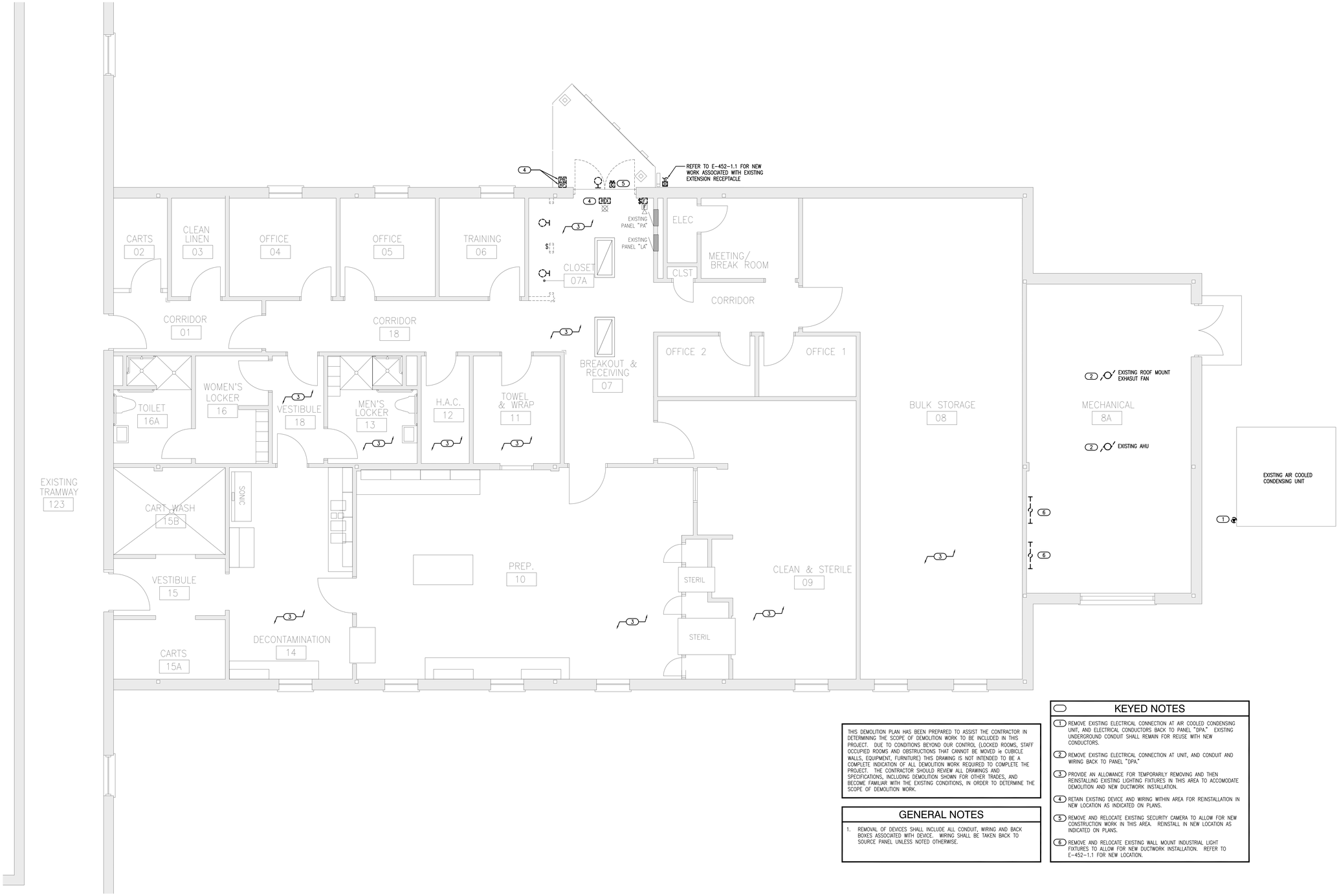

1 PARTIAL FLOOR PLAN ELECTRICAL - DEMOLITION

1/4" = 1'-0"

THIS DEMOLITION PLAN HAS BEEN PREPARED TO ASSIST THE CONTRACTOR IN DETERMINING THE SCOPE OF DEMOLITION WORK TO BE INCLUDED IN THIS PROJECT. DUE TO CONDITIONS BEYOND OUR CONTROL (LOCKED ROOMS, STAFF OCCUPIED ROOMS AND OBSTRUCTIONS THAT CANNOT BE MOVED ie CUBICLE WALLS, EQUIPMENT, FURNITURE) THIS DRAWING IS NOT INTENDED TO BE A COMPLETE INDICATION OF ALL DEMOLITION WORK REQUIRED TO COMPLETE THE PROJECT. THE CONTRACTOR SHOULD REVIEW ALL DRAWINGS AND SPECIFICATIONS, INCLUDING DEMOLITION SHOWN FOR OTHER TRADES, AND BECOME FAMILIAR WITH THE EXISTING CONDITIONS, IN ORDER TO DETERMINE THE SCOPE OF DEMOLITION WORK.

GENERAL NOTES

1. REMOVAL OF DEVICES SHALL INCLUDE ALL CONDUIT, WIRING AND BACK BOXES ASSOCIATED WITH DEVICE. WIRING SHALL BE TAKEN BACK TO SOURCE PANEL UNLESS NOTED OTHERWISE.

KEYED NOTES

1. REMOVE EXISTING ELECTRICAL CONNECTION AT AIR COOLED CONDENSING UNIT, AND ELECTRICAL CONDUCTORS BACK TO PANEL "DPA." EXISTING UNDERGROUND CONDUIT SHALL REMAIN FOR REUSE WITH NEW CONDUCTORS.
2. REMOVE EXISTING ELECTRICAL CONNECTION AT UNIT, AND CONDUIT AND WIRING BACK TO PANEL "DPA."
3. PROVIDE AN ALLOWANCE FOR TEMPORARILY REMOVING AND THEN REINSTALLING EXISTING LIGHTING FIXTURES IN THIS AREA TO ACCOMODATE DEMOLITION AND NEW DUCTWORK INSTALLATION.
4. RETAIN EXISTING DEVICE AND WIRING WITHIN AREA FOR REINSTALLATION IN NEW LOCATION AS INDICATED ON PLANS.
5. REMOVE AND RELOCATE EXISTING SECURITY CAMERA TO ALLOW FOR NEW CONSTRUCTION WORK IN THIS AREA. REINSTALL IN NEW LOCATION AS INDICATED ON PLANS.
6. REMOVE AND RELOCATE EXISTING WALL MOUNT INDUSTRIAL LIGHT FIXTURES TO ALLOW FOR NEW DUCTWORK INSTALLATION. REFER TO E-452-1.1 FOR NEW LOCATION.

KEYPLAN

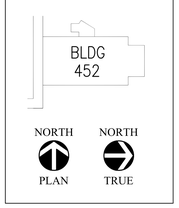

FULLY SPRINKLED

Revisions	Date

CONSULTANTS:

MEP ASSOCIATES, LLC
engineers | consultants | commissioning
MEP Associates, LLC | 2720 Arbor Court | Eau Claire, WI 54701
Phone: 715.832.5680 | Fax: 715.832.5668 | www.mepassociates.com
MEP PROJECT NO.: A18.13.07

ARCHITECT/ENGINEERS:

ANDERSON ENGINEERING
ENGINEERING • ARCHITECTURE • LAND SURVEYING
ENVIRONMENTAL SERVICES • LANDSCAPE ARCHITECTURE

Anderson Engineering of Minnesota, LLC
13605 1st Avenue North
Suite 100
Plymouth, MN 55441
763-412-4000 (o) 763-412-4090 (f)
www.ae-mn.com

Drawing Title: PARTIAL FLOOR PLAN ELECTRICAL - DEMOLITION

Approved: Project Director

Project Title: CORRECT GAP DEFICIENCIES AT SPS

Location: VA MEDICAL CENTER TOMAH WI

Date: 12-17-2013 | Checked: PCC | Drawn: PCC

Project Number: 676-13-106

Building Number: 452

Drawing Number: E-452-1.0

Dwg. 26 of 27

Office of Construction and Facilities Management

Department of Veterans Affairs

VA FORM 08-6231 (MAR 2012)

PRINTED: 10/7/2013 FILE: T:\Vaeny\A_MP\E-452-1.0.DWG

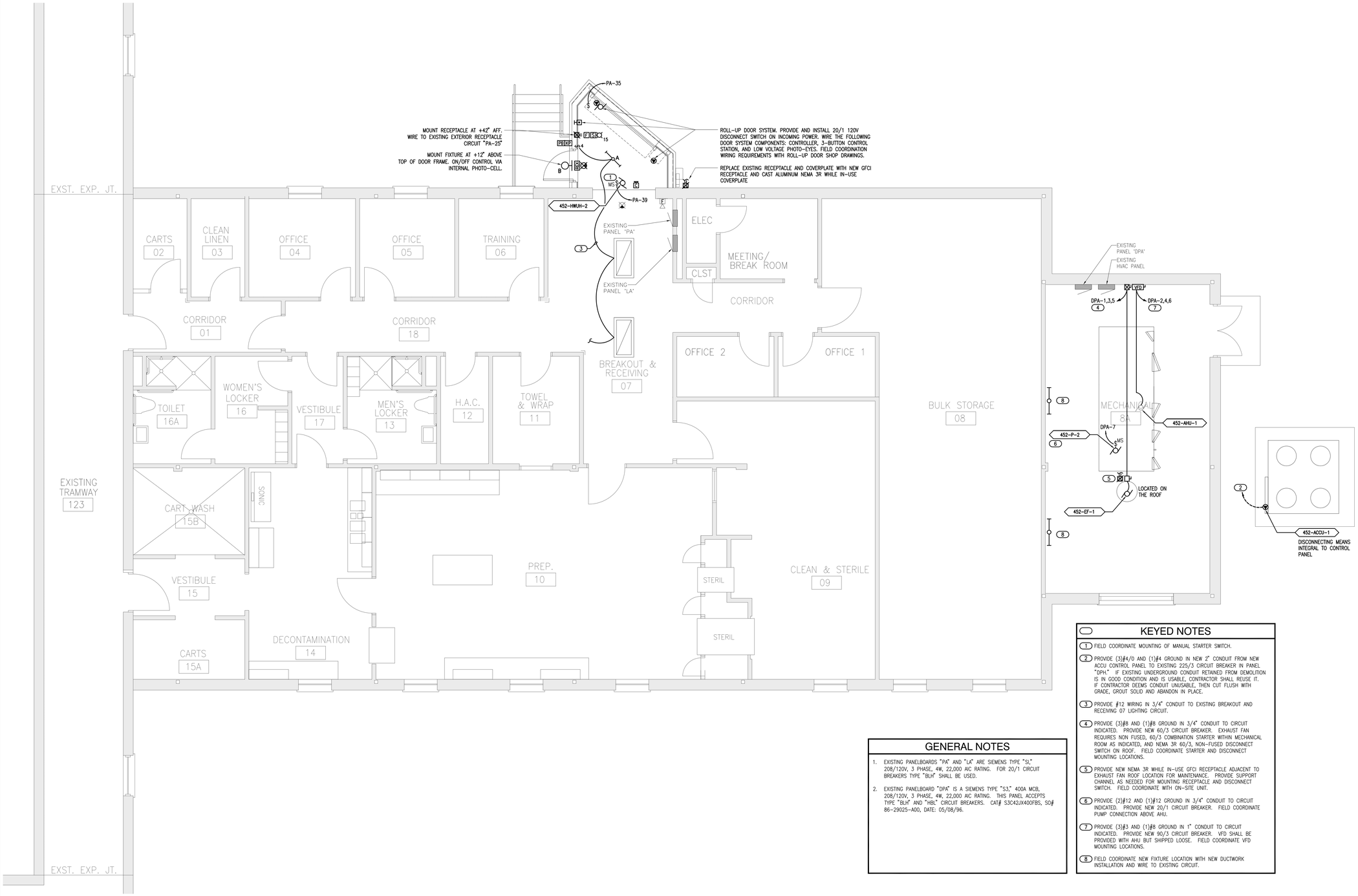

KEYED NOTES

1. FIELD COORDINATE MOUNTING OF MANUAL STARTER SWITCH.
2. PROVIDE (3)#4/0 AND (1)#4 GROUND IN NEW 2" CONDUIT FROM NEW ACCU CONTROL PANEL TO EXISTING 225/3 CIRCUIT BREAKER IN PANEL "DPH." IF EXISTING UNDERGROUND CONDUIT RETAINED FROM DEMOLITION IS IN GOOD CONDITION AND IS USABLE, CONTRACTOR SHALL REUSE IT. IF CONTRACTOR DEEMS CONDUIT UNUSABLE, THEN CUT FLUSH WITH GRADE, GROUT SOLID AND ABANDON IN PLACE.
3. PROVIDE #12 WIRING IN 3/4" CONDUIT TO EXISTING BREAKOUT AND RECEIVING 07 LIGHTING CIRCUIT.
4. PROVIDE (3)#8 AND (1)#8 GROUND IN 3/4" CONDUIT TO CIRCUIT INDICATED. PROVIDE NEW 60/3 CIRCUIT BREAKER. EXHAUST FAN REQUIRES NON FUSED, 60/3 COMBINATION STARTER WITHIN MECHANICAL ROOM AS INDICATED, AND NEMA 3R 60/3, NON-FUSED DISCONNECT SWITCH ON ROOF. FIELD COORDINATE STARTER AND DISCONNECT MOUNTING LOCATIONS.
5. PROVIDE NEW NEMA 3R WHILE IN-USE GFCI RECEPTACLE ADJACENT TO EXHAUST FAN ROOF LOCATION FOR MAINTENANCE. PROVIDE SUPPORT CHANNEL AS NEEDED FOR MOUNTING RECEPTACLE AND DISCONNECT SWITCH. FIELD COORDINATE WITH ON-SITE UNIT.
6. PROVIDE (2)#12 AND (1)#12 GROUND IN 3/4" CONDUIT TO CIRCUIT INDICATED. PROVIDE NEW 20/1 CIRCUIT BREAKER. FIELD COORDINATE PUMP CONNECTION ABOVE AHU.
7. PROVIDE (3)#3 AND (1)#8 GROUND IN 1" CONDUIT TO CIRCUIT INDICATED. PROVIDE NEW 90/3 CIRCUIT BREAKER. VFD SHALL BE PROVIDED WITH AHU BUT SHIPPED LOOSE. FIELD COORDINATE VFD MOUNTING LOCATIONS.
8. FIELD COORDINATE NEW FIXTURE LOCATION WITH NEW DUCTWORK INSTALLATION AND WIRE TO EXISTING CIRCUIT.

GENERAL NOTES

1. EXISTING PANELBOARDS "PA" AND "LA" ARE SIEMENS TYPE "SI," 208/120V, 3 PHASE, 4W, 22,000 AIC RATING. FOR 20/1 CIRCUIT BREAKERS TYPE "BLH" SHALL BE USED.
2. EXISTING PANELBOARD "DPA" IS A SIEMENS TYPE "S3," 400A MCB, 208/120V, 3 PHASE, 4W, 22,000 AIC RATING. THIS PANEL ACCEPTS TYPE "BLH" AND "HBL" CIRCUIT BREAKERS. CAT# S3C42JX400FBS, SO# 86-29025-A00, DATE: 05/08/96.

KEYPLAN

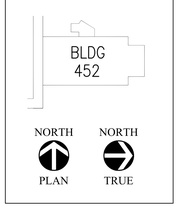

1 PARTIAL FLOOR PLAN ELECTRICAL - NEW

1/4" = 1'-0"

NORTH

FULLY SPRINKLED

Revisions	Date

CONSULTANTS:

MEP ASSOCIATES, LLC
engineers | consultants | commissioning
MEP Associates, LLC | 2720 Arbor Court | Eau Claire, WI 54701
Phone: 715.832.5680 | Fax: 715.832.5668 | www.mepassociates.com
MEP PROJECT NO.: A18.13.07

ARCHITECT/ENGINEERS:

ANDERSON ENGINEERING
ENGINEERING • ARCHITECTURE • LAND SURVEYING
ENVIRONMENTAL SERVICES • LANDSCAPE ARCHITECTURE

Anderson Engineering of Minnesota, LLC
13605 1st Avenue North
Suite 100
Plymouth, MN 55441
763-412-4000 (o) 763-412-4090 (f)
www.ae-mn.com

Drawing Title: PARTIAL FLOOR PLAN ELECTRICAL - NEW

Approved: Project Director

Project Title: CORRECT GAP DEFICIENCIES AT SPS

Location: VA MEDICAL CENTER TOMAH WI

Date: 12-17-2013 | Checked: PCC | Drawn: PCC

Project Number: 676-13-106

Building Number: 452

Drawing Number: E-452-1.1

Dwg. 27 of 27

Office of Construction and Facilities Management

Department of Veterans Affairs

VA FORM 08-6231 (MAR 2012)

Plotted: 9/10/2013 - 9:52 - C:\Users\ae-admin\Desktop\E-452-1.1 EE.dwg