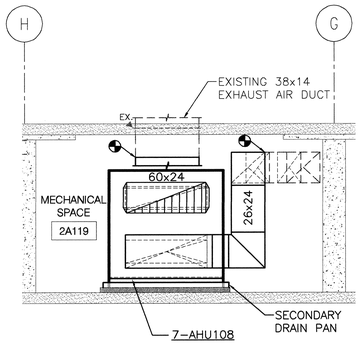

D3 MECHANICAL ROOM SECTION – 7-AHU108
SCALE: 1/4" = 1'-0"

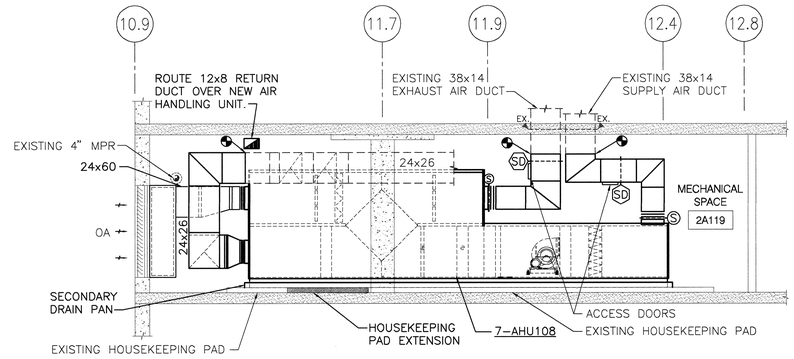

D5 MECHANICAL ROOM SECTION – 7-AHU108
SCALE: 1/4" = 1'-0"

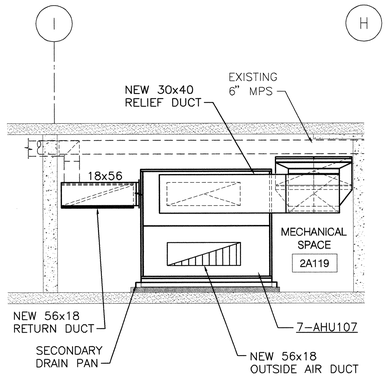

F3 MECHANICAL ROOM SECTION – 7-AHU107
SCALE: 1/4" = 1'-0"

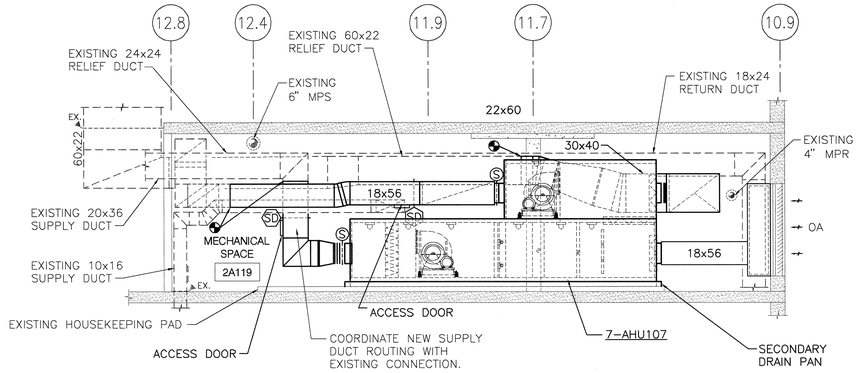

F5 MECHANICAL ROOM SECTION – 7-AHU107
SCALE: 1/4" = 1'-0"

GENERAL SHEET NOTES

A. SEE SHEET GI102 FOR PHASING PLAN.18.

B. EXISTING DUCTWORK THAT PENETRATES FIRE OR SMOKE RATED WALL, FLOOR OR ROOF ASSEMBLIES IS NOT BEING UPGRADED FOR RATING OF EXISTING ASSEMBLIES. NEW DUCTWORK THAT PENETRATES RATED ASSEMBLIES (NEW OR EXISTING) SHALL BE PROVIDED WITH THE APPROPRIATE DAMPER FOR THAT RATING.

PARTITION TYPES LEGEND

- EXISTING WALL, DOOR, WINDOW, MILLWORK, FIXTURE OR OTHER FIXTURE OR ASSEMBLY TO BE REMOVED.
- EXISTING WALL OR AREA TO REMAIN
- EXISTING COLUMN TO REMAIN
- NEW NON-RATED WALL
- NON RATED – SMOKE TIGHT WALL
- 1-HR FIRE RATED WALL
- 2-HOUR FIRE RATED WALL
- PROJECT LIMITS OF WORK
- EXISTING CONCRETE WALL

PHASING

REFER TO DRAWING GI102 FOR PHASING.

COORDINATION DRAWINGS

REFER TO DRAWING GI001 FOR COORDINATION DRAWINGS NOTE.

KEY MAP

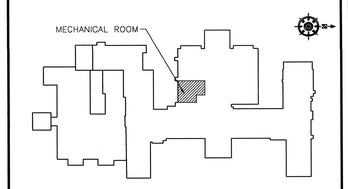

REVISION NO.	REVISION DESCRIPTION	By	Date

Revisions

Department of Veterans Affairs
Alexandria VA Health Care System
2495 Shreveport Highway
Pineville, LA 71360

STATE OF LOUISIANA
JOSEPH E. HUTCHISON
License No. 28347
PROFESSIONAL ENGINEER
MECHANICAL ENGINEERING
05-27-13
SEAL

Architect/Engineer Address
Harrell, Saltrick & Hopper
Design & Management Solutions for the Built Environment
8016 TOWER POINT DRIVE
CHARLOTTE, NC 28227
P 704.814.1320
F 704.321.0833
WWW.HSHPC.COM
COPYRIGHT © 2012 HARRELL SALTRICK & HOPPER, PC
HSH PROJECT # 12013

Recommended Approvals:	
1. MEDICAL DIRECTOR	6. OPERATIONS SERVICE LINE MANAGER
2. ASSOCIATE DIRECTOR	7. INFECTION CONTROL MANAGER
3. CHIEF OF STAFF	8. SAFETY MANAGER
4. ASSOC. DIRECTOR	9. GENERAL ENGINEER
5. SERVICE LINE MGRS.	10. COR

Drawing Title: MECHANICAL ROOM SECTIONS

FINAL BID DOCUMENTS

Project Title: DESIGN BUILDING 7 AIR HANDLER UPGRADE - PROJECT A: 7-AHU107 & 7-AHU108

Date: SEPT. 27, 2013
Project Number: 502-12-201

Drawn	Building Number	AutoCAD File Name
DWS	7	
Checked	Reviewed	Const. Contract No.

DRAWING No. M301

Veterans Affairs