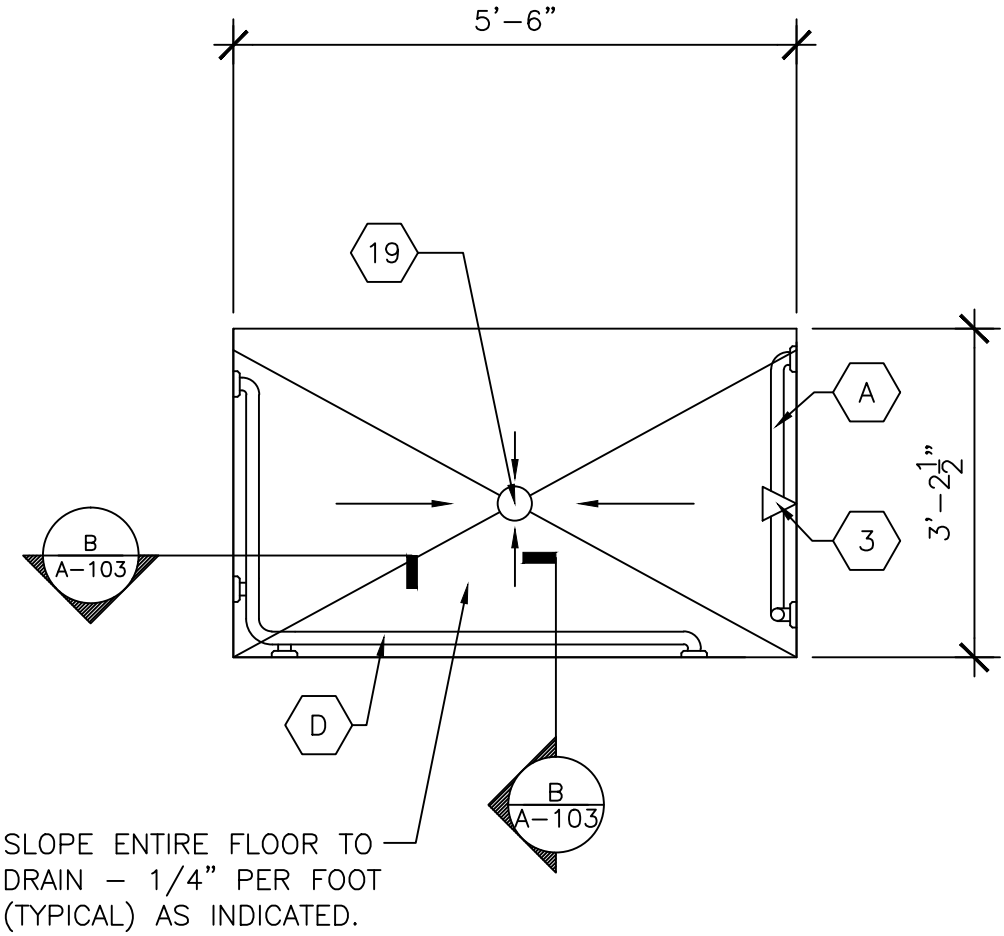

A
A-103

SHOWER DETAIL

NOT TO SCALE