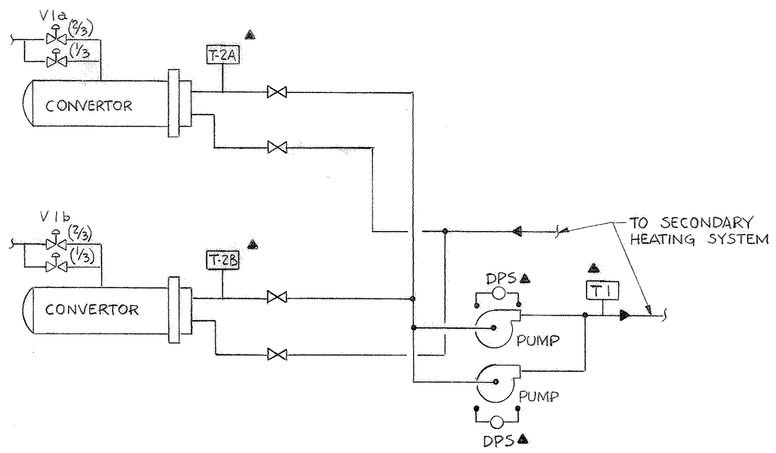

PRIMARY HEATING CONVERTORS

TYPICAL TWO SYSTEMS

1. SYSTEM OPERATION IS STARTED FROM ECC.
2. WHEN EITHER OR BOTH PUMPS ARE IN OPERATION, STEAM CONTROL VALVES V-1A AND V-1B IN PARALLEL TO MAINTAIN LEAVING WATER TEMPERATURE OF 180°F.
3. T-2A AND T-2B OVERRIDE T-1 TO LIMIT TEMPERATURE LEAVING EACH CONVERTOR TO 200°F. MAXIMUM.
4. PROVIDE A SINGLE STEAM VALVE AT EACH CONVERTOR IF VALVE CAPACITY PERMITS USE OF A 2" OR SMALLER VALVE. OTHERWISE, FURNISH TWO VALVES SIZED FOR 1/3 AND 2/3 OF CAPACITY TO MODULATE IN SEQUENCE.

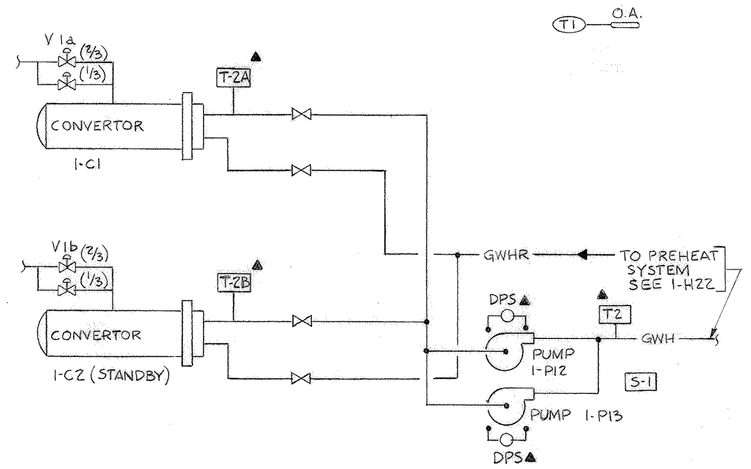

PREHEAT SYSTEM CONVERTORS

TYPICAL TWO SYSTEMS

1. SYSTEM OPERATION IS STARTED FROM ECC.
2. WHEN EITHER OR BOTH PUMPS ARE IN OPERATION, STEAM CONTROL VALVES V-1A AND V-1B IN PARALLEL TO MAINTAIN LEAVING WATER TEMPERATURE OF OF 180°F.
3. PUMPS OPERATE CONTINUOUSLY BELOW 60°F O.A.
4. T-2A AND T-2B OVERRIDE T-1 TO LIMIT TEMPERATURE LEAVING EACH CONVERTOR TO 200°F. MAXIMUM.
5. FURNISH TWO STEAM VALVES SIZED FOR 1/3 AND 2/3 OF CAPACITY TO MODULATE IN SEQUENCE FOR EACH CONVERTOR.

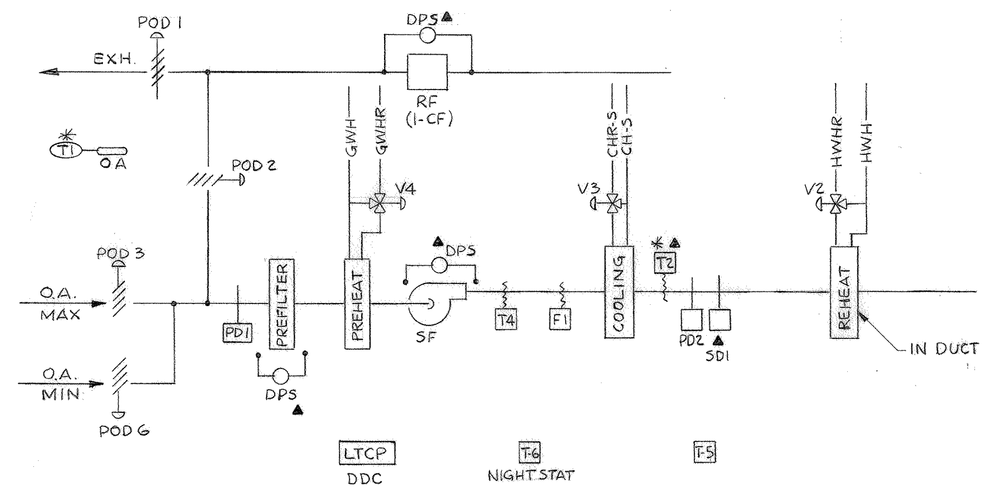

LOW PRESSURE, CONSTANT VOLUME, RETURN AIR SYSTEM

1-AC3, 24-HOUR

OPERATING SEQUENCE

1. SYSTEM OPERATION IS STARTED AND STOPPED FROM THE ECC.
2. DURING OPERATION WHEN OA AT T-1 IS BELOW 68°F., T-2 MODULATES V-4, THEN POD1, POD2 AND POD3 AND T-2 MODULATES V-3, ALL IN SEQUENCE, ON TEMPERATURE RISE TO MAINTAIN 57°F. PNEUMATIC FREEZESTAT T-4 OVERRIDES T-2 TO LIMIT MIXED AIR TO 40°F. MINIMUM.
3. DURING OPERATION WHEN OA AT T-1 IS ABOVE 68°F., T-1 CLOSES POD3, OPENS POD1, CLOSES POD2 TO MINIMUM. T-2 MODULATES V-3 TO MAINTAIN 57°F.
4. T-5 MODULATES V-2 TO MAINTAIN 75° SPACE TEMPERATURE.
5. ELECTRIC FREEZESTAT F-1 STOPS SF WHENEVER TEMPERATURE IS BELOW 36°F.

STARTING AND STOPPING

1. WHEN STARTED, POD6 OPENS, POD1 OPENS TO MINIMUM, POD2 REMAINS OPEN. SF AND RF SHALL RUN. WHEN STOPPED, SF AND RF STOP; POD1, POD3, POD6 CLOSE. POD2 REMAINS OPEN.
2. WHEN SYSTEM OPERATION IS STARTED, PRESSURE SWITCH PD1 STOPS SUPPLY FAN SHOULD MIXING PLENUM PRESSURE FALL BELOW MINUS 2" W.G. PRESSURE SWITCH PD2 STOPS SF SHOULD PRESSURE RISE ABOVE 4" W.G.

SMOKE CONTROL

1. WHEN SMOKE IS SENSED AT SD1, SF AND RF STOP, POD1, POD3, AND POD6 CLOSE. POD 2 IS OPEN.

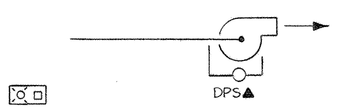

EXHAUST FAN - FLAMMABLE STORAGE

FAN CF-124

1. FAN IS STARTED AND STOPPED FROM ECC.
2. PROVIDE PILOT LIGHT AND AUDIBLE ALARM ON WALL TO INDICATE AIR FLOW. PROVIDE TEST BUTTON FOR AUDIBLE ALARM AND PILOT LIGHT.

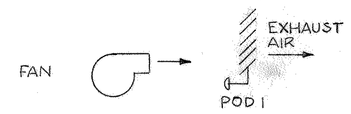

EXHAUST FAN

1. FAN IS STARTED AND STOPPED FROM ECC.
2. WHEN FAN STARTS, POD1 OPENS. WHEN FAN STOPS, POD1 CLOSES.
3. POD1 MOUNTED AS INDICATED ON DRAWINGS.
4. TYPICAL FOR:

   ISOLTION EXHAUST 1-CF2, CF3, CF5, CF38.
   FUMEHOOD EXHAUST 1-CF12, CF33, CF36, CF150.
   RADIOISOTOPE EXHAUST 1-CF34, CF131, CF134.
   BIOLOGICAL HOOD EXHAUST 1-CF37, CF56, CF66, CF151.
   GENERAL EXHAUST 1-VAF4, VAF76, CF127, CF135.
   LABORATORY EXHAUST 1-VAF35, VAF147
   MISCELLANEOUS EXHAUST 1-PEF126, VAF139, VAF140, CF143, CF144.
   GENERAL EXHAUST 1- VAF65, VAF145.

NOTE: PROVIDE CF66 WITH 7" Ø DISCHARE THROUGH ROOF AND 7" R.O.D. AT ROOF.

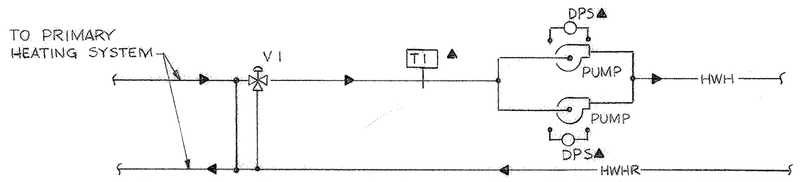

TERMINAL UNIT HEATING SYSTEM
TYPICAL TWO SYSTEMS

1. SYSTEM OPERATION IS STARTED AND STOPPED FROM ECC.
2. PUMPS ARE SELECTED FROM ECC.
3. T-1 MODULATES V-1 TO MAINTAIN 160°F. WATER TEMPERATURE.

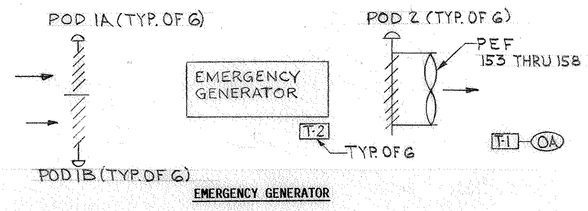

EMERGENCY GENERATOR

1. STARTING OF EMERGENCY GENERATOR OPENS POD1A (PROVIDES COMBUSTION AIR). EACH GENERATOR TO HAVE ASSOCIATED POD1A. DAMPER POD1A CLOSES WHEN GENERATOR STOPS.
2. THE FOLLOWING SEQUENCE SHALL OCCUR WHEN OUTDOOR AIR IS ABOVE 60°, WHEN ANY OF THE SIX GENERATORS ARE OPERATING AND WHEN THE TEMPERATURE AT ANY T-2 RISES ABOVE 95°.
   a. POD1B AND POD2 OF ASSOCIATED OPERATING GENERATOR OPEN.
   b. ON A CONTINUED RISE AT T2 ABOVE 95°, ADDITIONAL POD1B'S AND POD2'S OPEN (EVEN THOUGH ASSOCIATED GENERATORS MAY NOT BE OPERATING) UNTIL ALL SIX POD1B'S AND POD2'S ARE OPEN.
   c. ON A CONTINUED RISE AT T2 ABOVE 95°F AND WHEN ALL DAMPERS ARE OPEN, THE EXHAUST FAN AT THE OPERATING GENERATOR OR GENERATORS SHALL START ON HIGH SPEED.
   d. AFTER THE TEMPERATURE AT T2 DROPS TO 85°F, THE SEQUENCE SHALL REVERSE UNTIL ALL DAMPERS EXCEPT POD1A ARE CLOSED AND EXHAUST FANS ARE OFF.
3. WHEN OUTDOOR AIR IS BELOW 60°F, THE OPERATION SHALL BE IDENTICAL AS DESCRIBED IN 2 EXCEPT THE EXHAUST FAN SHALL OPERATE AT LOW SPEED.

FAN CAPACITY CONTROL - VARIABLE VOLUME

1. TYPICAL FOR ALL UNITS

   STATIC PRESSURE SENSOR SPS THROUGH VARIABLE SPEED DRIVE VARIES SUPPLY FAN SPEED TO MAINTAIN A CONSTANT STATIC PRESSURE OF 0.8" W.G.

2. TYPICAL FOR ALLUNITS EXCEPT 1-AC12 AND 1-AC31

   VELOCITY PRESSURE TRANSMITTER IN SUPPLY DUCT RESETS VELOCITY PRESSURE TRANSMITTER IN RETURN DUCT. VELOCITY PRESSURE TRANSMITTER IN RETURN DUCT MODULATES RETURN AIR FAN SPEED THROUGH VARIABLE SPEED DRIVE TO MAINTAIN SCHEDULED AIR QUANTITIES.

3. 1-AC12

   FLOW CONTROLLER IN SUPPLY DUCT PROVIDES MEANS TO RECORD CFM.

4. 1-AC31

   OPERATION IS SIMILAR AS DESCRIBED IN PARAGRAPH 2 EXCEPT REPLACE RETURN AIR FAN WITH EXHAUST FAN.

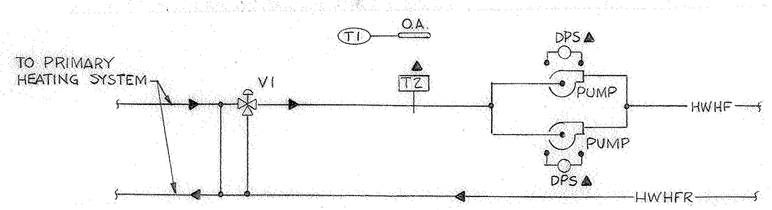

RESET SCHEDULE	
T1	T2
10	180
60	110

RADIATION HEATING SYSTEM
TYPICAL TWO SYSTEMS

1. SYSTEM OPERATION IS STARTED AND STOPPED FROM ECC.
2. PUMPS ARE SELECTED FROM ECC.
3. T-1 RESETS T-2 WHICH MODULATES V-1 TO MAINTAIN SCHEDULED TEMPERATURE.

8-0-1-1353

Revisions	Date
"AS BUILT"	6-17-94

RECORD DRAWING
CORRECTED ON BASIS OF DATA
FURNISHED BY THE RESIDENT ENGINEER

Key Plan

Seal

RTKL/CS&D/HENRY ADAMS (J.V.)
ARCHITECTS AND ENGINEERS
400 E. PRATT STREET
BALTIMORE, MD 21202

Drawing Title: CONTROL DIAGRAMS HVAC

Approved Project Director: J. Albert Miller

Project Title: 324-BED REPLACEMENT HOSPITAL-PHASE II

Building Number: 1

Checked

Drawn

Location: VAMC-BALTIMORE, MD

Date: 9/1/88

Project No. 511-001D

DRAWING NO. 1-H93

Dwg. 120 of 123

Veterans Administration

VA FORM 08-6231A, MAR 1984

U.S. GOVERNMENT PRINTING OFFICE: 1984-440-667