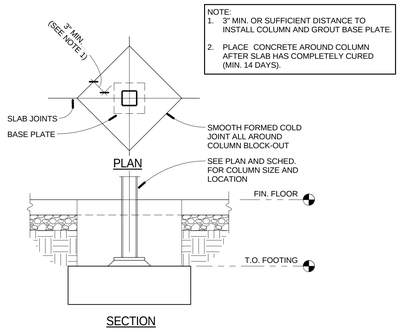

1 SS012 TYPICAL COLUMN BLOCKOUT
NO SCALE

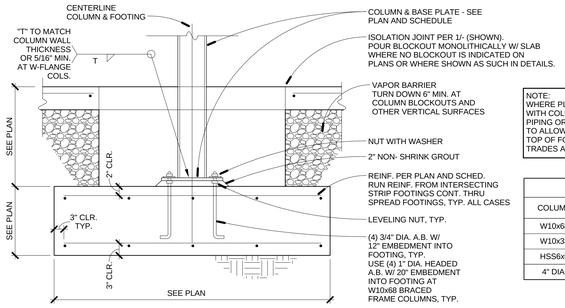

NOTE:
WHERE PLUMBING PIPING CONFLICTS WITH COLUMN FOOTINGS, EITHER MOVE PIPING OR LOWER FOOTING AS REQUIRED TO ALLOW PLUMBING TO PASS OVER THE TOP OF FOOTINGS. COORDINATE WITH ALL TRADES AFFECTED.

BASE PLATE SCHEDULE

COLUMN	BASE PLATE SIZE	ANCHOR BOLT SPACING	DETAIL
W10x68	1'-5" SQ. x 1 1/4"	1'-1" x 1'-1"	A
W10x33	1'-4" SQ. x 1"	1'-1" x 1'-1"	A
HSS6x6	1'-0" SQ. x 3/4"	9" x 9"	B
4" DIA.	10" SQ. x 3/4"	7" x 7"	C

2 SS012 TYPICAL COLUMN FOOTING AND BASE PLATE
NO SCALE

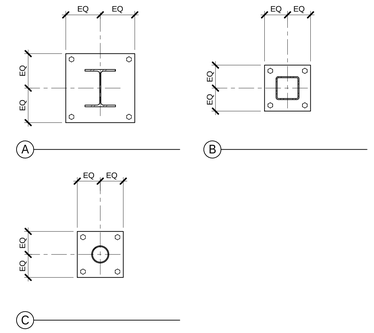

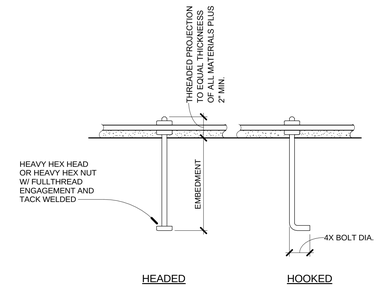

3 SS012 ANCHOR BOLTS IN CONCRETE
NO SCALE

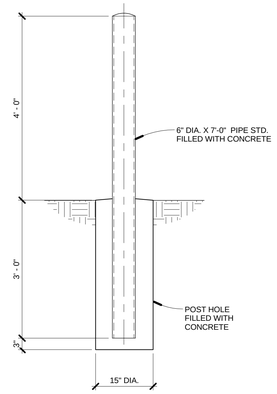

4 SS012 TYP. PIPE GUARD DETAIL
NO SCALE

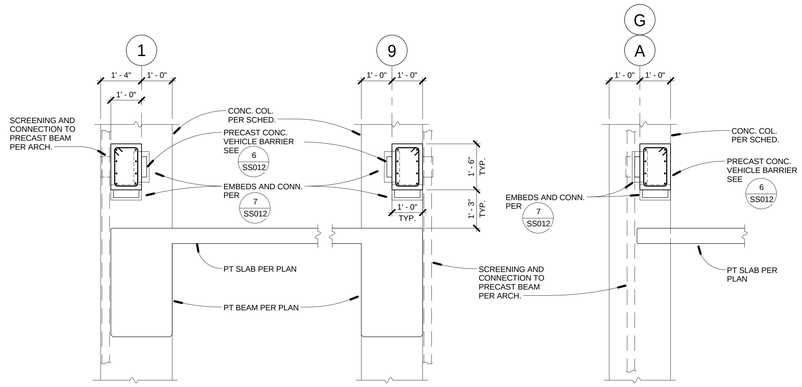

5 SS012 PRECAST VEHICLE BARRIERS
NO SCALE

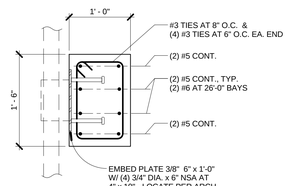

NOTE:
COORDINATE LOCATION OF SCREENING EMBED PLATE W/ ARCHITECTURAL SCREEN LAYOUT.

6 SS012 PRECAST VEHICLE BARRIER REINF.
1" = 1'-0"

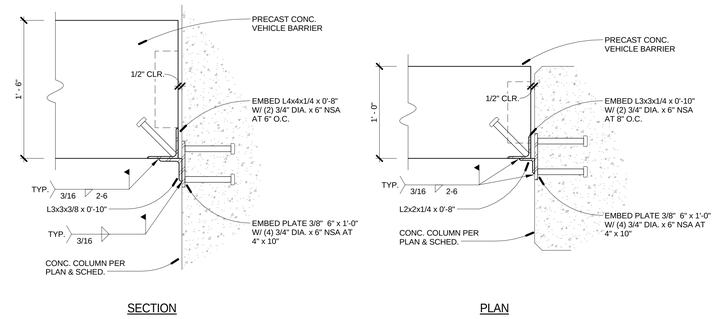

7 SS012 PRECAST VEHICLE BARRIER CONN.
1 1/2" = 1'-0"

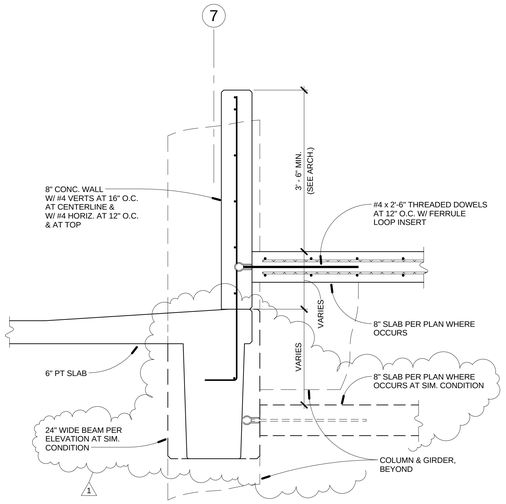

8 SS012 TYP. SECTION AT 8" SLAB (SPEED RAMP)
NO SCALE

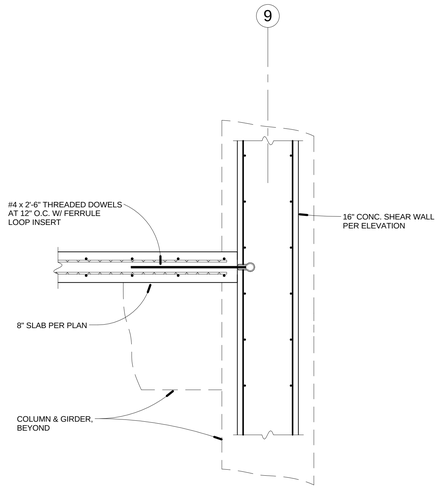

9 SS012 TYP. 8" SLAB (SPEED RAMP) AT SHEAR WALL
NO SCALE

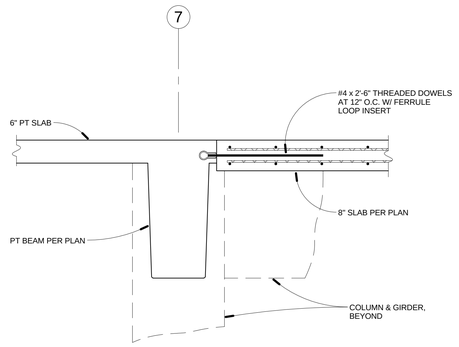

10 SS012 TYP. SECTION AT 8" SLAB AT TOP LEVEL
NO SCALE

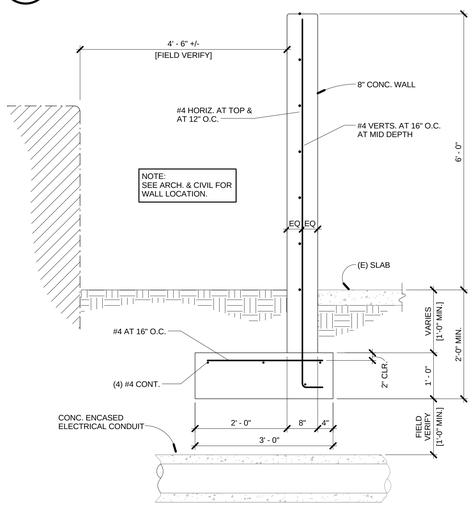

11 SS012 MONUMENT SIGN DETAIL
3/4" = 1'-0"

Bid Documents

Revisions:	Date
1 Beam Revision	2-24-14

CONSULTANTS:
HYYTINEN ENGINEERING
5458 Longley Lane, Suite B
Reno, Nevada 89511
(775) 826-3019 PHONE
(775) 826-3076 FAX
57c-09

Professional Seal

ARCHITECT/ENGINEERS:
H+K ARCHITECTS
5485 Reno Corporate Drive, Suite 100
Reno, Nevada 89511-2262
P 775+332+6640
F 775+332+6642
hkarchitects.com

Drawings Title: Typical Concrete Details
Approved: Project Director

Project Title: VA Sierra Nevada Parking Structure
Location: 975 Kirman Ave., Reno, Nevada
Date: January 20, 2014 | Checked: RH | Drawn: NVGI

Project Number: 654-CSI-914
Building Number: 16
Drawing Number: SS012

Office of Construction and Facilities Management
Department of Veterans Affairs

VA FORM 08-6231