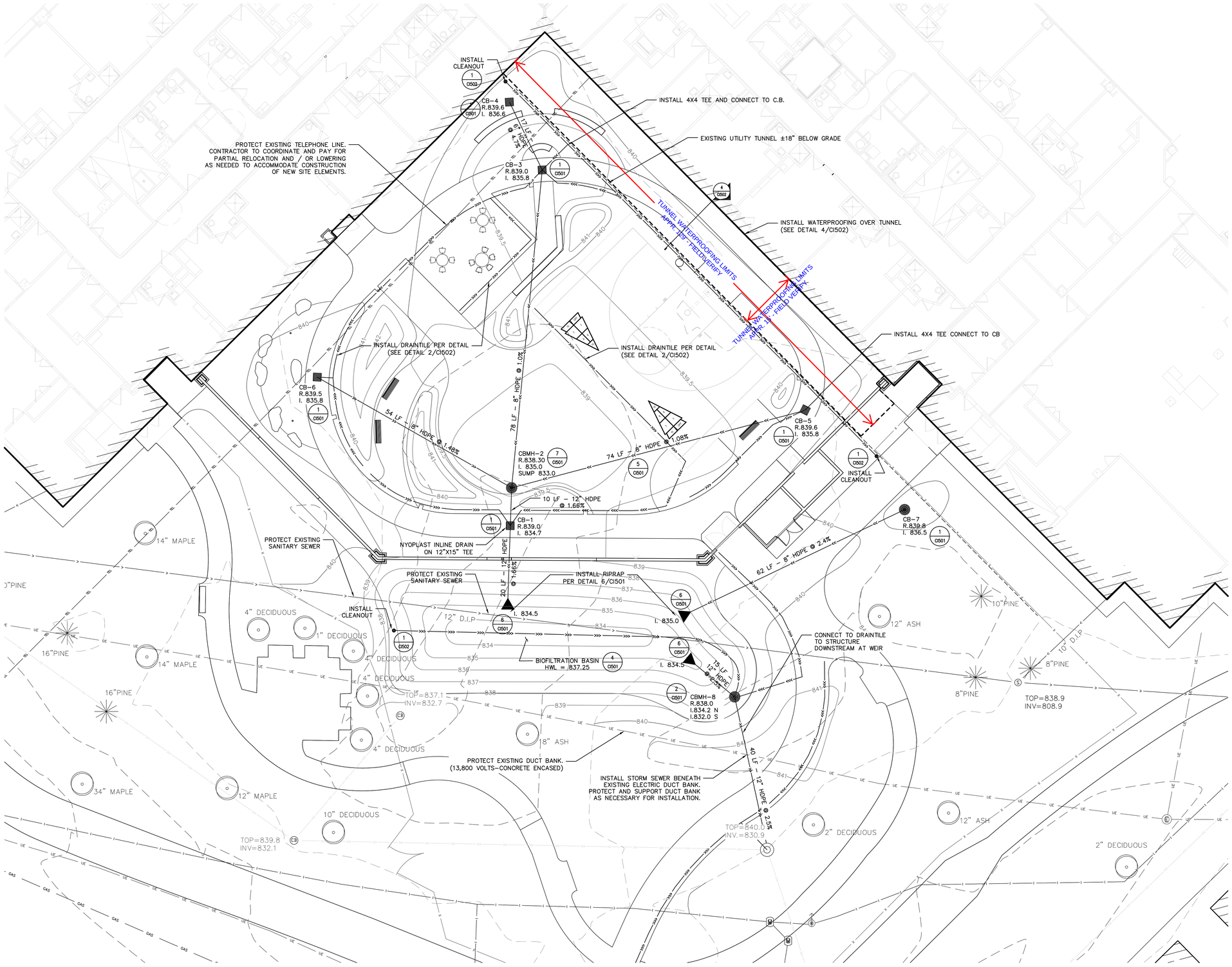

LEGEND

- EXISTING MINOR CONTOUR
- EXISTING MAJOR CONTOUR
- PROPOSED CONTOUR
- PROPOSED STORM INLET
- PROPOSED STORM SEWER
- PROPOSED DRAINTILE
- EXISTING TELEPHONE
- EXISTING SANITARY SEWER
- EXISTING ELECTRIC
- EXISTING STORM SEWER
- INSTALL WATERPROOFING OVER EXISTING UTILITY TUNNEL

STRUCTURE SCHEDULE

	STRUCTURE	CASTING
CB-1	15" NYOPLAST	1599CGPL
CBMH-2	48" PRECAST	R-2572 TYPE C
CB-3	15" NYOPLAST	1599CGPL
CB-4	15" NYOPLAST	1599CGPL
CB-5	15" NYOPLAST	1599CGPL
CB-6	15" NYOPLAST	1599CGPL
CB-7	15" NYOPLAST	1599CGPL
CBMH-8	48" PRECAST	R-4342

NOTE:

1. ALL CASTINGS FOR STRUCTURES 1-6 SHALL HAVE BOLTED LOCKING GRATES.

FULLY SPRINKLERED BID DOCUMENTS

Revisions:	Date

CONSULTANTS:

I HEREBY CERTIFY THAT THIS PLAN, SPECIFICATION, OR REPORT WAS PREPARED BY ME OR UNDER MY DIRECT SUPERVISION AND THAT I AM A DULY LICENSED ARCHITECT UNDER THE LAWS OF THE STATE OF MINNESOTA.

PRINT NAME: GARY R. JOHNSON, P.E.

SIGNATURE:

DATE OCTOBER 23, 2013 LICENSE # 42010

ARCHITECT/ENGINEERS:

ANDERSON ENGINEERING

ENGINEERING • ARCHITECTURE • LAND SURVEYING
ENVIRONMENTAL SERVICES • LANDSCAPE ARCHITECTURE

Anderson Engineering of Minnesota, LLC
13605 1st Avenue North
Suite 100
Plymouth, MN 55441
763-412-4000 (o) 763-412-4090 (f)
www.ae-mn.com

Drawing Title: UTILITY PLAN

Approved:
Director of Engineering: Steve Challeen
Chief of Projects: Cathie Joyce

Project Title: MINNEAPOLIS VA HEALTHCARE SYSTEM
WARD 1K
OUTDOOR RECREATION AREA

Location: MINNEAPOLIS, MINNESOTA

Date: OCTOBER 23, 2013 | Checked: MR | Drawn: PH/AT

Project Number: 618-13-127

Building Number: 70

Drawing Number: 1274-CI101

Dwg. 13 of 46

Office of Construction and Facilities Management

Department of Veterans Affairs

VA FORM 08-6231

Oct 24, 2013 - 8:31am
Xref Filename: (13452_CIVIL BASE) (13452_VA_BASE_TITLE) (13452 BASE_SURVEY) (13452-ASDI-Topo)plan

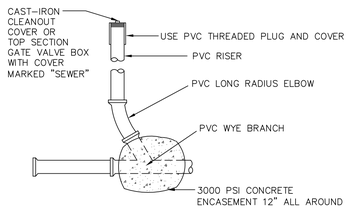

NOTE:

DIAMETER OF CLEAN-OUT STRUCTURE SHALL BE EQUAL TO DIAMETER OF THE SEWER PIPE IT IS CONNECTED TO.

1 / CI502 DRAINTILE CLEANOUT

N.T.S.

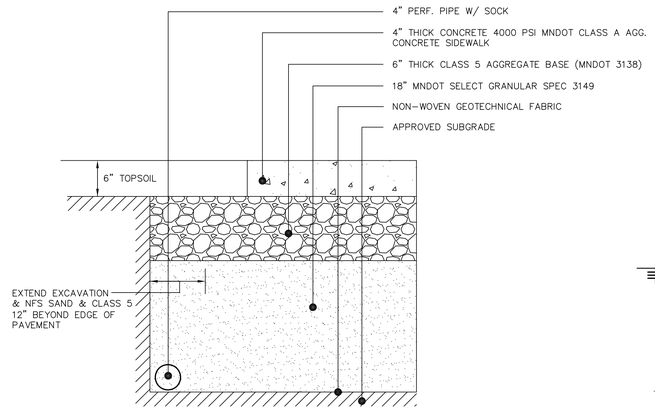

* TIP SUBGRADE TOWARDS PERF. PIPE.

2 / CI502 TYPICAL SECTION - CONCRETE PEDESTRIAN PAVEMENT (SIDEWALK, PATIOS, BASKETBALL COURT)

N.T.S.

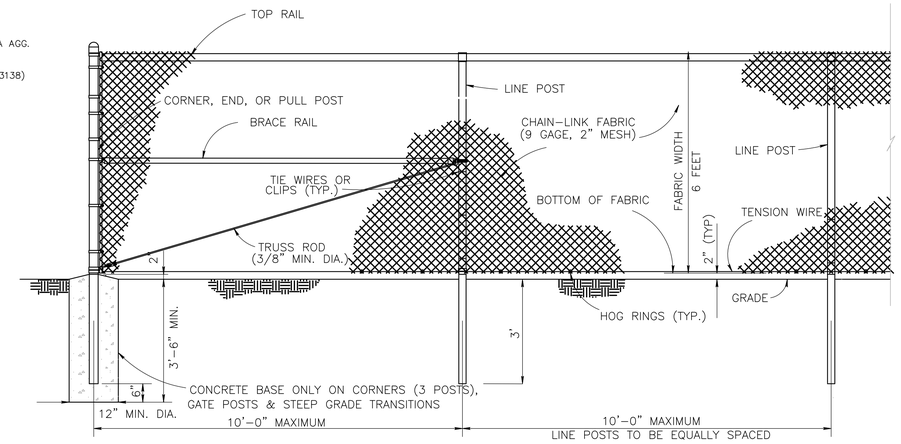

3 / CI502 CHAIN-LINK FENCE (TEMPORARY CONST. FENCE)

N.T.S.

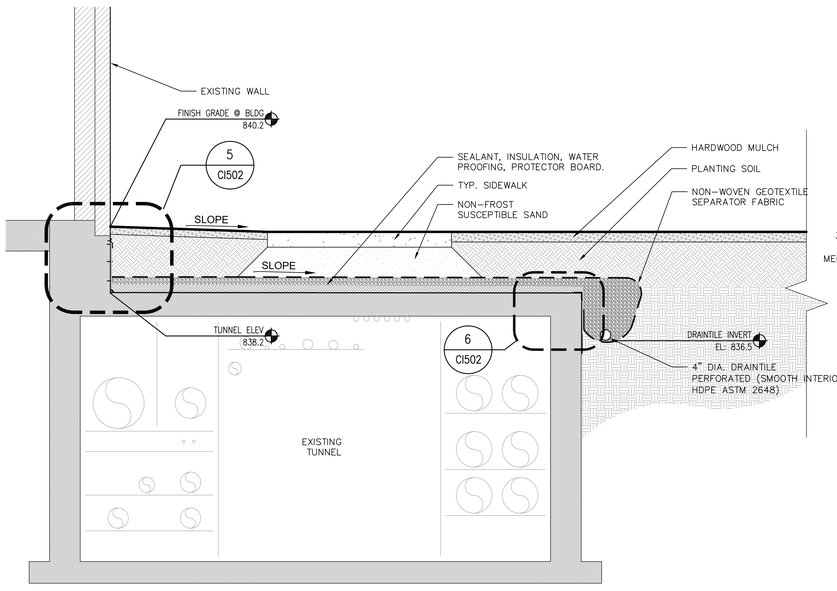

4 / CI502 WATERPROOFING SECTION

N.T.S.

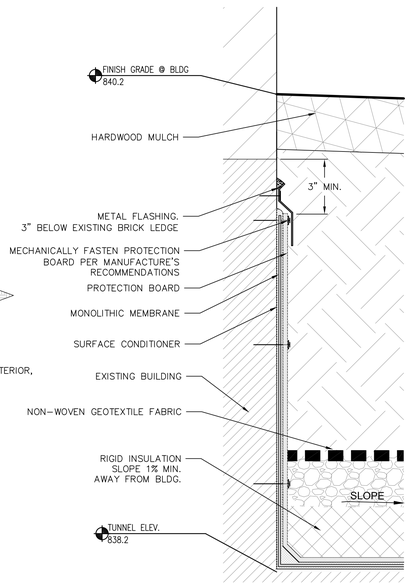

5 / CI502 TYPICAL FOUNDATION WALL DETAILING AT GRADE

N.T.S.

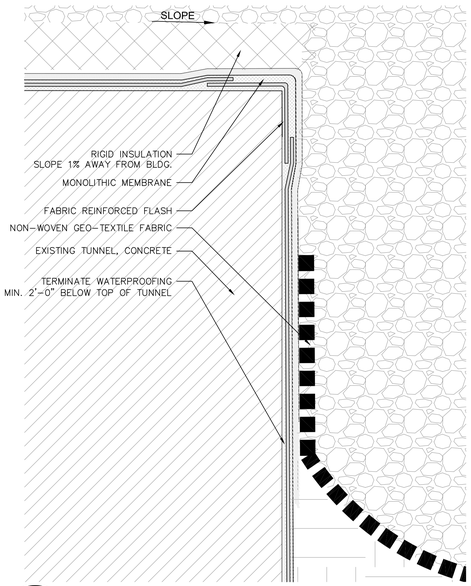

6 / CI502 TYPICAL WALL DETAILING AT CORNER

N.T.S.

FULLY SPRINKLERED BID DOCUMENTS

Revisions:	Date

CONSULTANTS:

I HEREBY CERTIFY THAT THIS PLAN, SPECIFICATION, OR REPORT WAS PREPARED BY ME OR UNDER MY DIRECT SUPERVISION AND THAT I AM A DULY LICENSED ARCHITECT UNDER THE LAWS OF THE STATE OF MINNESOTA.
PRINT NAME: GARY R. JOHNSON, P.E.
SIGNATURE:
DATE OCTOBER 23, 2013 LICENSE # 42010

ARCHITECT/ENGINEERS:

ANDERSON ENGINEERING
ENGINEERING • ARCHITECTURE • LAND SURVEYING
ENVIRONMENTAL SERVICES • LANDSCAPE ARCHITECTURE

Anderson Engineering of Minnesota, LLC
13605 1st Avenue North
Suite 100
Plymouth, MN 55441
763-412-4000 (o) 763-412-4090 (f)
www.ae-mn.com

Drawing Title: CIVIL DETAILS

Approved: Director of Engineering: Steve Challeen
Chief of Projects: Cathie Joyce

Project Title: MINNEAPOLIS VA HEALTHCARE SYSTEM
WARD 1K
OUTDOOR RECREATION AREA

Location: MINNEAPOLIS, MINNESOTA

Date: OCTOBER 23, 2013 | Checked: MR | Drawn: PH/AT

Project Number: 618-13-127
Building Number: 70
Drawing Number: 1274-CI502
Dwg. 15 of 46

Office of Construction and Facilities Management
Department of Veterans Affairs

VA FORM 08-6231

Oct 24, 2013 - 8:31am jsteiner
X:\ae-Filenames\1-13452_CIVIL BASE\1-13452_VA_BASE_TITLE1\13452 BASE_SURVEY\1-13452x-Site-Topo.dwg
Y:\13450\13452 MPLS VA HEALTH CARE SYSTEM - DESIGN OUTDOOR RECREATION AREA-WARD 1K\Dwg-Cs\Civil\13452 DETAILS.dwg

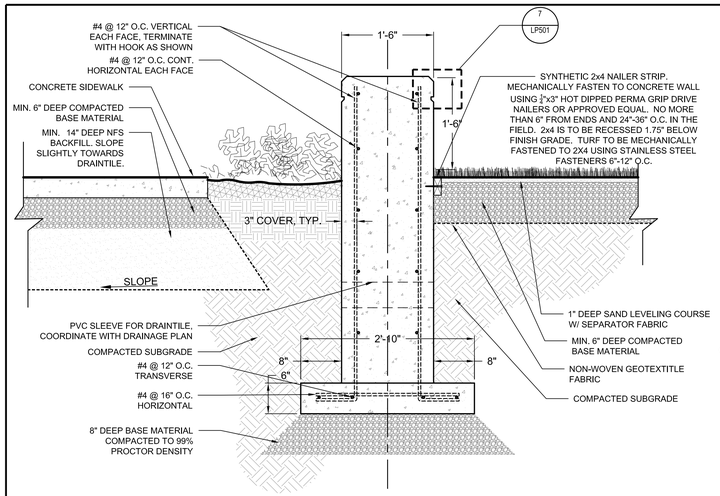

1 LP501 WALL SECTION – A
SCALE: 1" =1'=0"

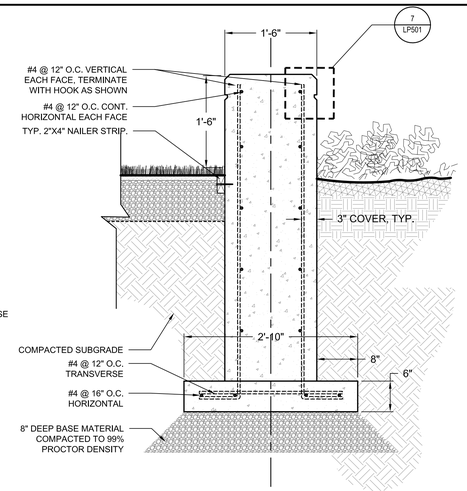

2 LP501 WALL SECTION – B
SCALE: 1" =1'=0"

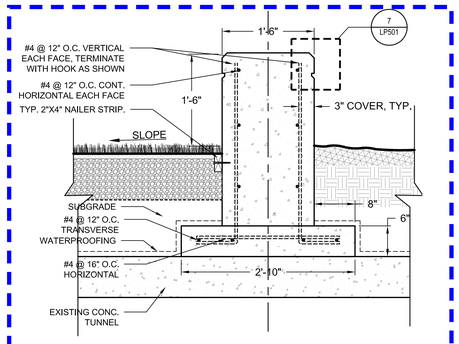

3 LP501 WALL SECTION – C
SCALE: 1" =1'=0"

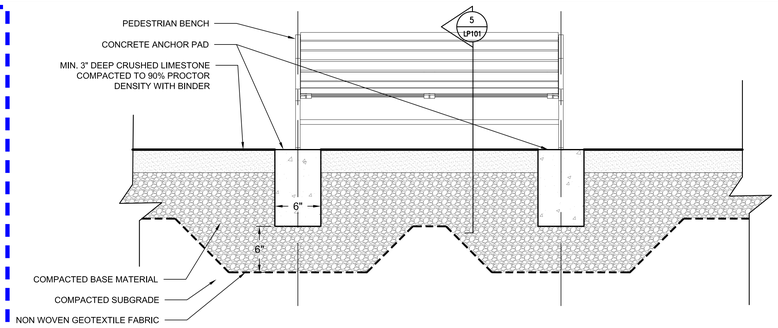

4 LP501 PEDESTRIAN BENCH
SCALE: 1 1/2" =1'=0"

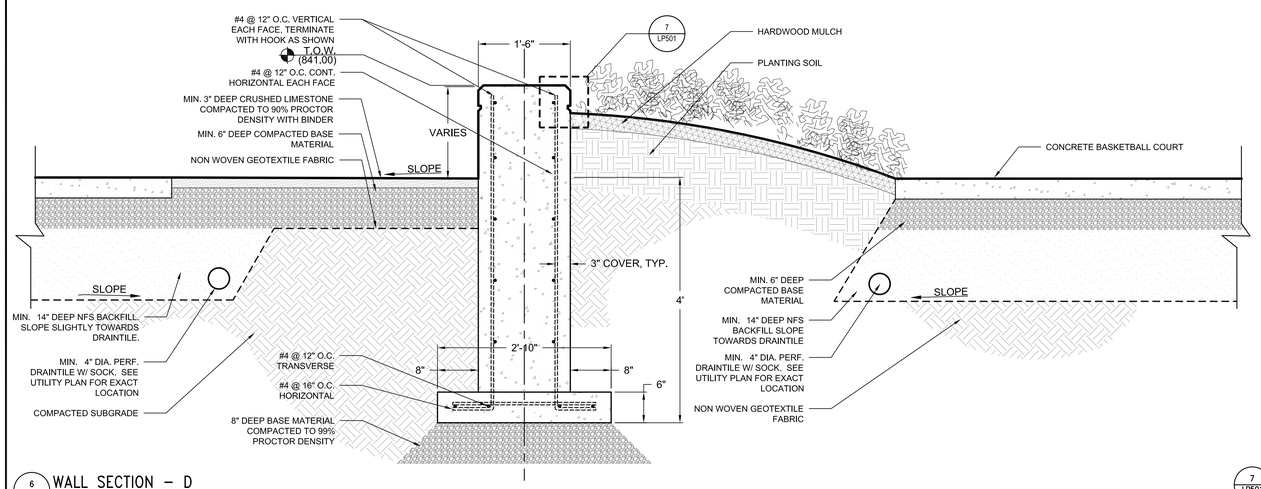

6 LP501 WALL SECTION – D
SCALE: 1" =1'=0"

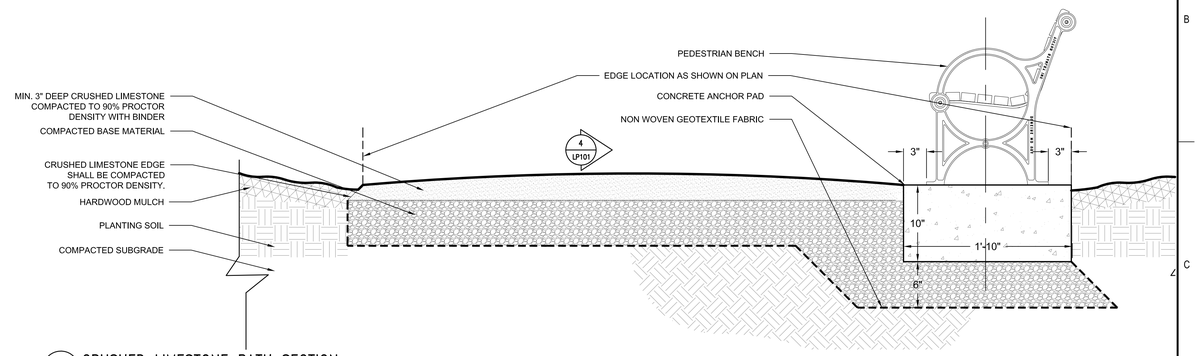

5 LP501 CRUSHED LIMESTONE PATH SECTION
SCALE: 1 1/2" =1'=0"

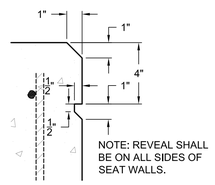

7 LP501 TYP. WALL FINISH DETAIL
SCALE: 1" =1'=0"

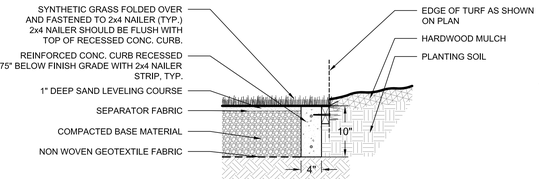

8 LP501 SYNTHETIC TURF EDGE DETAIL
SCALE: 1" =1'=0"

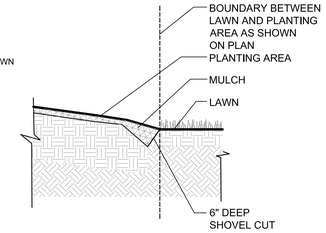

9 LP501 SPADE EDGE DETAIL
SCALE: 1" =1'=0"

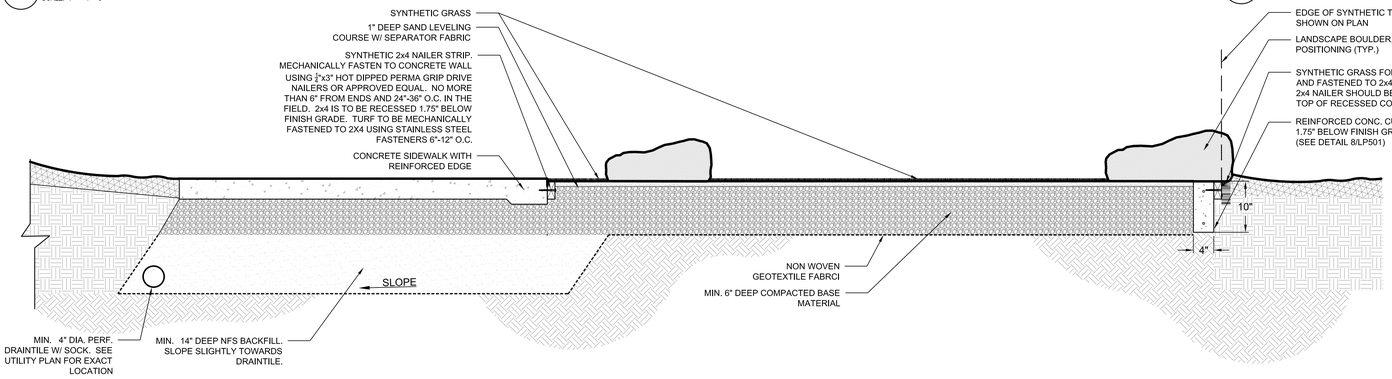

10 LP501 PUTTING GREEN SECTION
SCALE: 1" =1'=0"

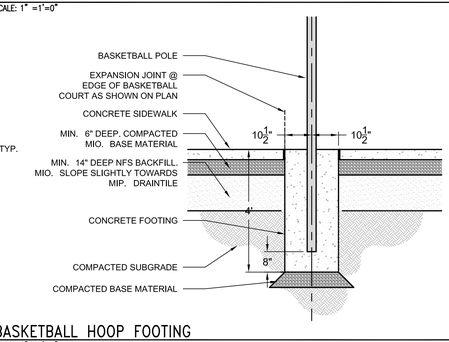

11 LP501 BASKETBALL HOOP FOOTING
SCALE: 1" =1'=0"

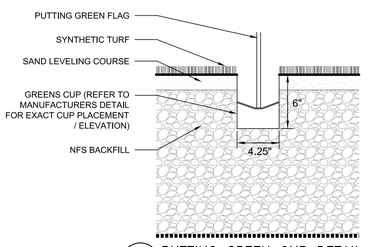

12 LP501 PUTTING GREEN CUP DETAIL
SCALE: 3" =1'=0"

FULLY SPRINKLERED BID DOCUMENTS

Revisions:	Date

CONSULTANTS:

I HEREBY CERTIFY THAT THIS PLAN, SPECIFICATION, OR REPORT WAS PREPARED BY ME OR UNDER MY DIRECT SUPERVISION AND THAT I AM A DULY LICENSED ARCHITECT UNDER THE LAWS OF THE STATE OF MINNESOTA.
PRINT NAME: CURT H. CLAEYS, R.L.A.
SIGNATURE:
DATE OCTOBER 23, 2013 LICENSE # 45613

ARCHITECT/ENGINEERS:

ANDERSON ENGINEERING
ENGINEERING • ARCHITECTURE • LAND SURVEYING
ENVIRONMENTAL SERVICES • LANDSCAPE ARCHITECTURE

Anderson Engineering of Minnesota, LLC
13605 1st Avenue North
Suite 100
Plymouth, MN 55441
763-412-4000 (o) 763-412-4090 (f)
www.ae-mn.com

Drawing Title: LANDSCAPE DETAILS

Approved:
Director of Engineering: Steve Challeen
Chief of Projects: Cathie Joyce

Project Title: MINNEAPOLIS VA HEALTHCARE SYSTEM
WARD 1K
OUTDOOR RECREATION AREA

Location: MINNEAPOLIS, MINNESOTA

Date: OCTOBER 23, 2013 | Checked: MR | Drawn: JD

Project Number: 618-13-127
Building Number: 70
Drawing Number: 1274-LP501
Dwg. 19 of 46

Office of Construction and Facilities Management
Department of Veterans Affairs

VA FORM 08-6231

Oct 24, 2013 - 8:32am
X:\07 Projects\1342_VA_BASE_TITLE\
one eighth inch = one foot
jsteiner
Y:\134001\34521\MPLS VA HEALTH CARE SYSTEM - DESIGN OUTDOOR RECREATION AREA\WARD 1K\Dwg-C\06Landscape Arch\LAND_DETAILS.dwg

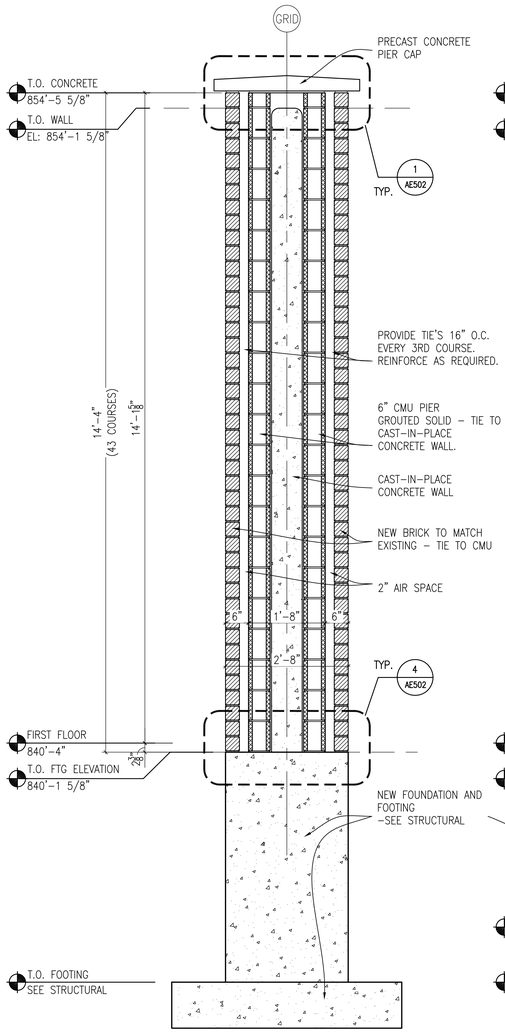

1 AE302 PIER SECTION
SCALE: 3/4"=1'-0"

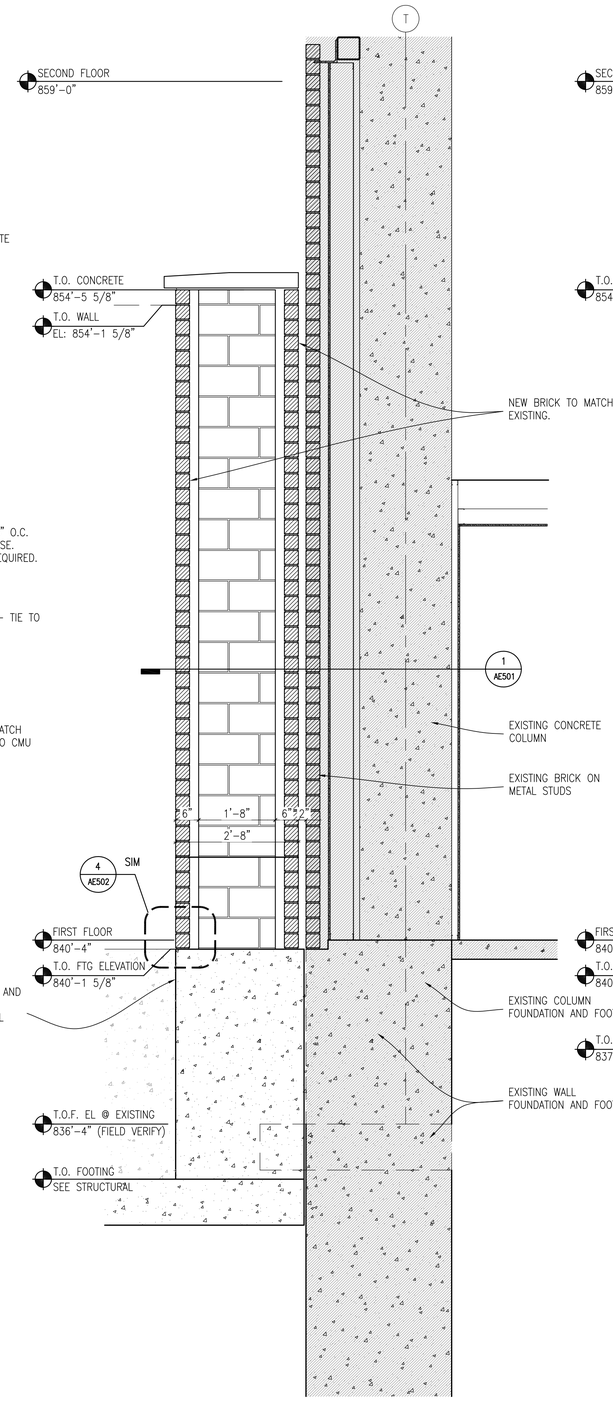

2 AE302 PIER SECTION AT WALL (GRIDLINE T)
SCALE: 3/4"=1'-0"

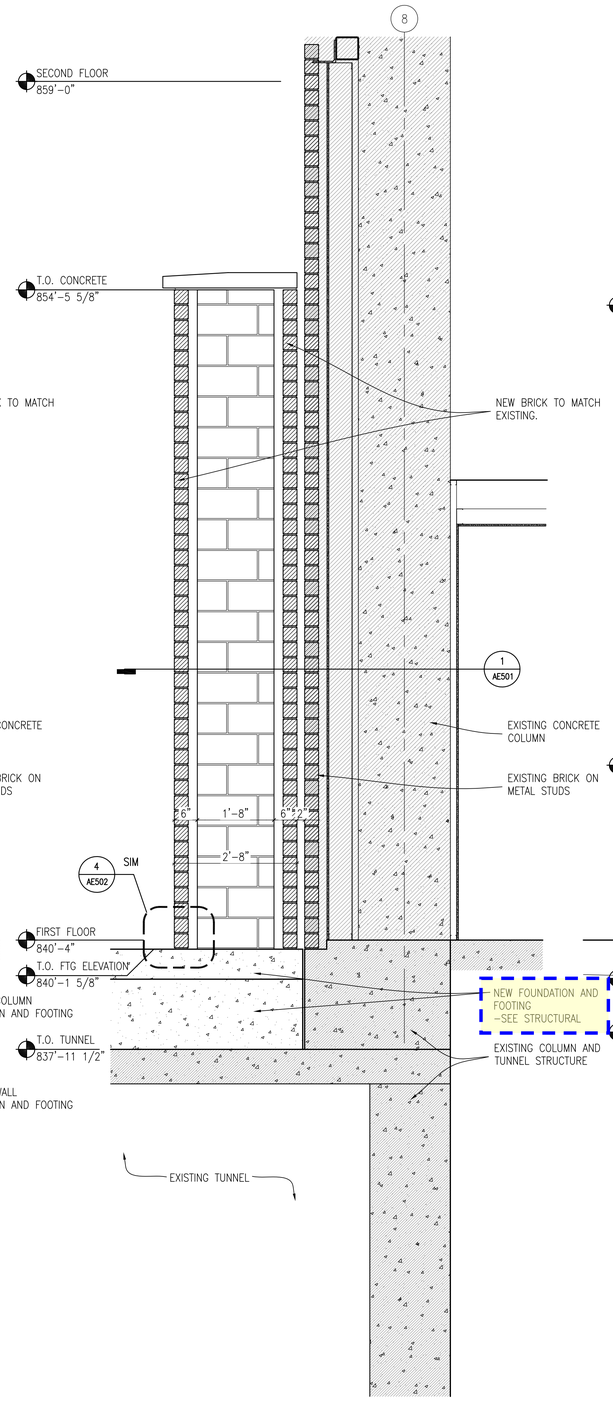

3 AE302 PIER SECTION AT WALL (GRIDLINE 8)
SCALE: 3/4"=1'-0"

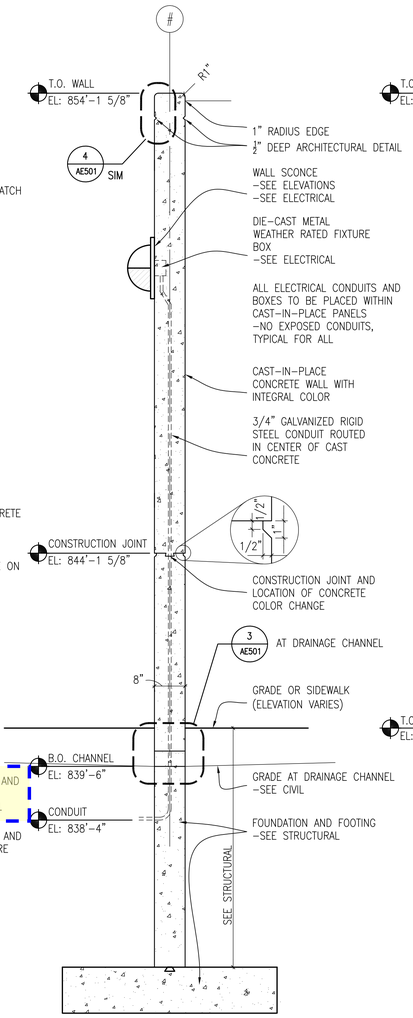

4 AE302 PRECAST WALL SECTION
SCALE: 3/4"=1'-0"

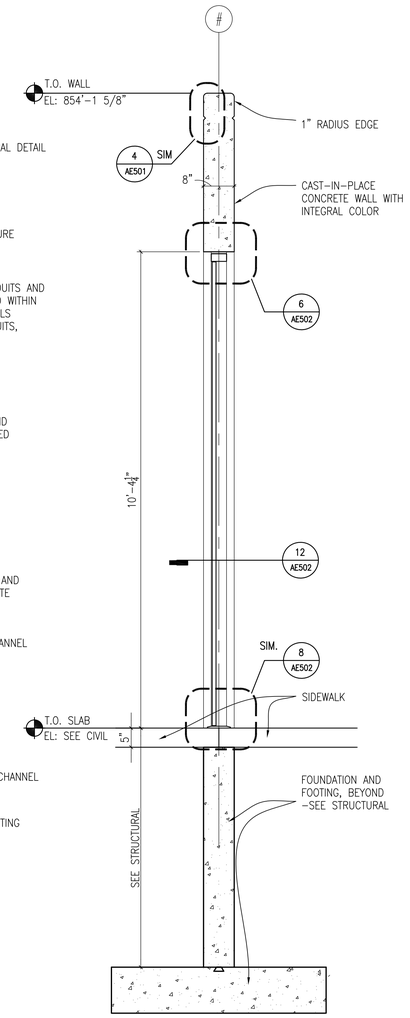

5 AE302 PRECAST WALL SECTION AT OPENING
SCALE: 3/4"=1'-0"

FULLY SPRINKLERED BID DOCUMENTS

Revisions:	Date

CONSULTANTS:

I HEREBY CERTIFY THAT THIS PLAN, SPECIFICATION, OR REPORT WAS PREPARED BY ME, OR UNDER MY DIRECT SUPERVISION AND THAT I AM A DULY LICENSED ARCHITECT UNDER THE LAWS OF THE STATE OF MINNESOTA.
PRINT NAME: CHARLES I. SCOTT, A.I.A.
SIGNATURE:
DATE OCTOBER 23, 2013 LICENSE # 18675

ARCHITECT/ENGINEERS:

ANDERSON ENGINEERING
ENGINEERING • ARCHITECTURE • LAND SURVEYING
ENVIRONMENTAL SERVICES • LANDSCAPE ARCHITECTURE

Anderson Engineering of Minnesota, LLC
13605 1st Avenue North
Suite 100
Plymouth, MN 55441
763-412-4000 (o) 763-412-4090 (f)
www.ae-mn.com

Drawing Title: WALL SECTIONS

Approved: Director of Engineering: Steve Challeen
Chief of Projects: Cathie Joyce

Project Title: MINNEAPOLIS VA HEALTHCARE SYSTEM
WARD 1K
OUTDOOR RECREATION AREA

Location: MINNEAPOLIS, MINNESOTA

Date: OCTOBER 23, 2013 | Checked: MR | Drawn: WSH

Project Number: 618-13-127
Building Number: 70
Drawing Number: 1274-AE302
Dwg. 31 of 46

Office of Construction and Facilities Management
Department of Veterans Affairs

VA FORM 08-6231

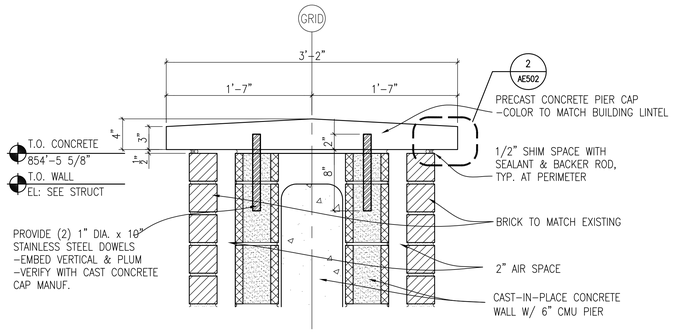

1 AE502 SECTION DETAIL AT COLUMN CAP
SCALE: 1 1/2"=1'-0"

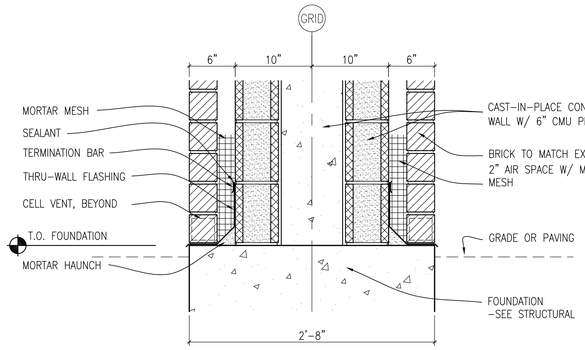

4 AE502 SECTION DETAIL AT COLUMN BASE
SCALE: 1 1/2"=1'-0"

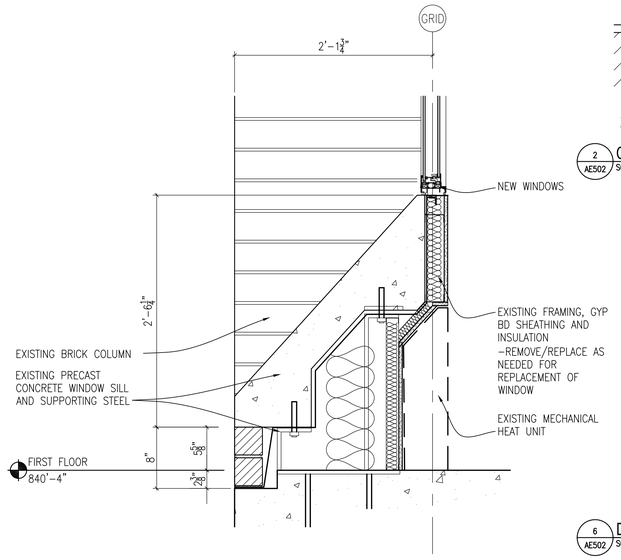

5 AE502 SECTION DETAIL AT PRECAST WINDOW SILL
SCALE: 1 1/2"=1'-0"

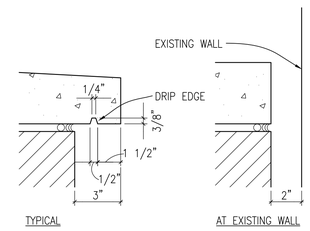

2 AE502 CAP DRIP DETAIL
SCALE: 3"=1'-0"

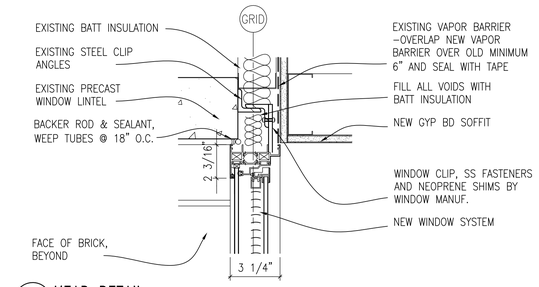

3 AE502 HEAD DETAIL
SCALE: 3"=1'-0"

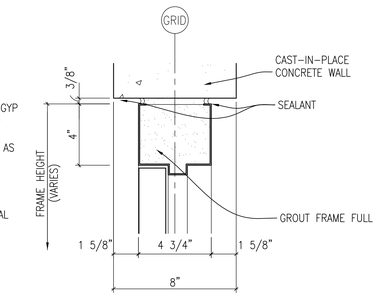

6 AE502 DOOR HEAD DETAIL
SCALE: 3"=1'-0"

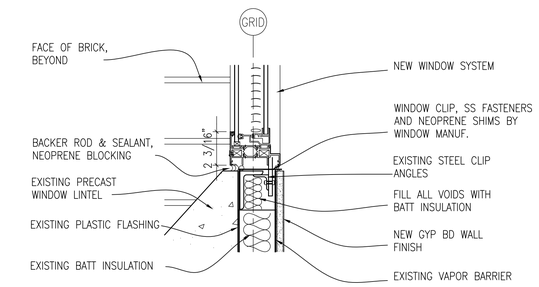

7 AE502 WINDOW SILL DETAIL
SCALE: 3"=1'-0"

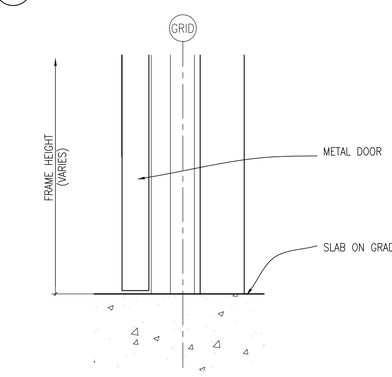

8 AE502 DOOR SILL DETAIL
SCALE: 3"=1'-0"

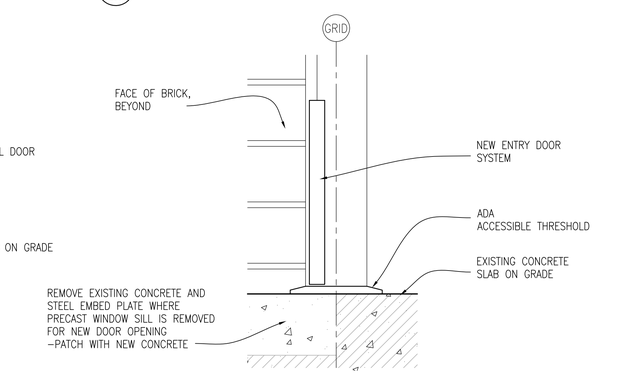

9 AE502 DOOR SILL DETAIL
SCALE: 3"=1'-0"

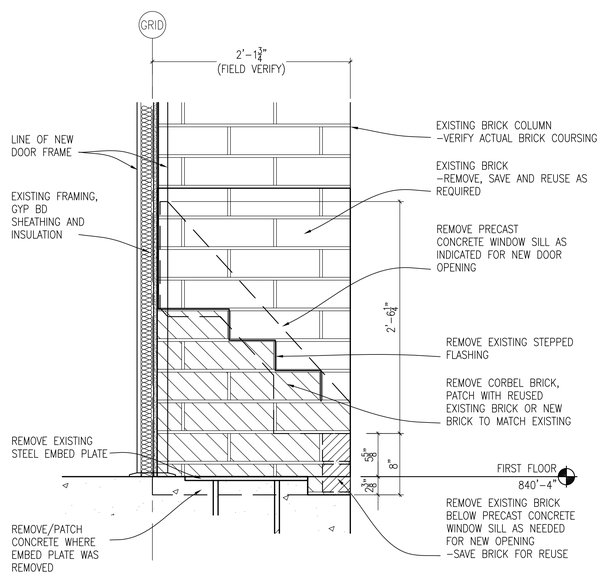

10 AE502 DETAIL AT EXISTING COLUMN
SCALE: 1 1/2"=1'-0"

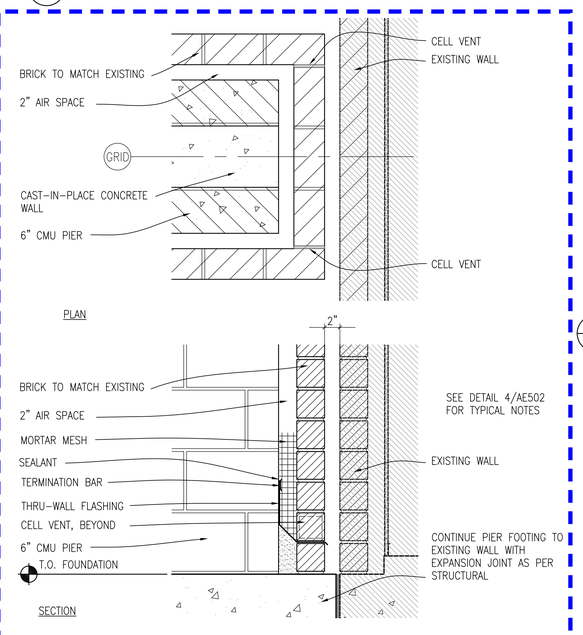

11 AE502 DETAIL OF COLUMN AT EXISTING WALL
SCALE: 1 1/2"=1'-0"

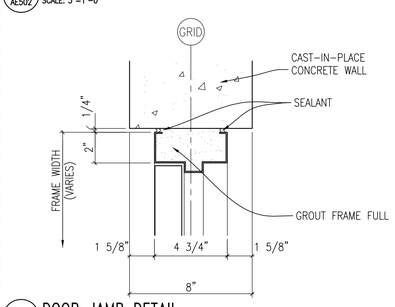

12 AE502 DOOR JAMB DETAIL
SCALE: 3"=1'-0"

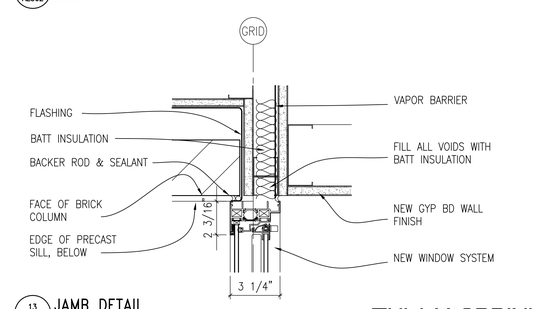

13 AE502 JAMB DETAIL
SCALE: 3"=1'-0"

FULLY SPRINKLERED BID DOCUMENTS

Revisions:	Date

CONSULTANTS:

I HEREBY CERTIFY THAT THIS PLAN, SPECIFICATION, OR REPORT WAS PREPARED BY ME OR UNDER MY DIRECT SUPERVISION AND THAT I AM A DULY LICENSED ARCHITECT UNDER THE LAWS OF THE STATE OF MINNESOTA.
PRINT NAME: CHARLES I. SCOTT, A.I.A.
SIGNATURE:
DATE OCTOBER 23, 2013 LICENSE # 18675

ARCHITECT/ENGINEERS:

ANDERSON ENGINEERING
ENGINEERING • ARCHITECTURE • LAND SURVEYING
ENVIRONMENTAL SERVICES • LANDSCAPE ARCHITECTURE

Anderson Engineering of Minnesota, LLC
13605 1st Avenue North
Suite 100
Plymouth, MN 55441
763-412-4000 (o) 763-412-4090 (f)
www.ae-mn.com

Drawing Title: DETAILS

Approved: Director of Engineering: Steve Challeen
Chief of Projects: Cathie Joyce

Project Title: MINNEAPOLIS VA HEALTHCARE SYSTEM
WARD 1K
OUTDOOR RECREATION AREA

Location: MINNEAPOLIS, MINNESOTA

Date: OCTOBER 23, 2013 | Checked: MR | Drawn: WSH

Project Number: 618-13-127
Building Number: 70
Drawing Number: 1274-AE502
Dwg. 33 of 46

Office of Construction and Facilities Management
Department of Veterans Affairs

VA FORM 08-6231

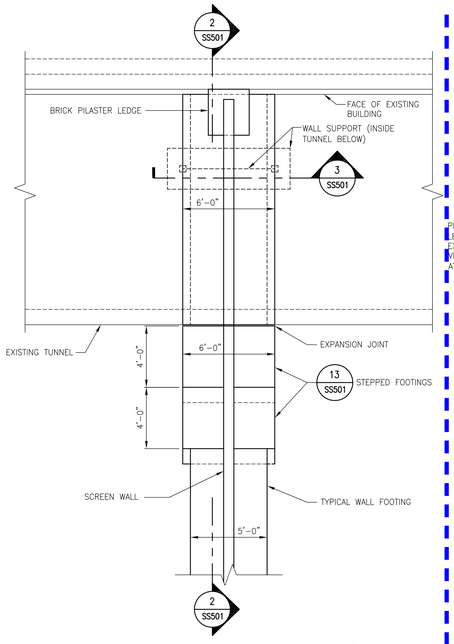

1 SS501 PARTIAL PLAN
SCALE: 1/4" = 1'-0"

NORTH

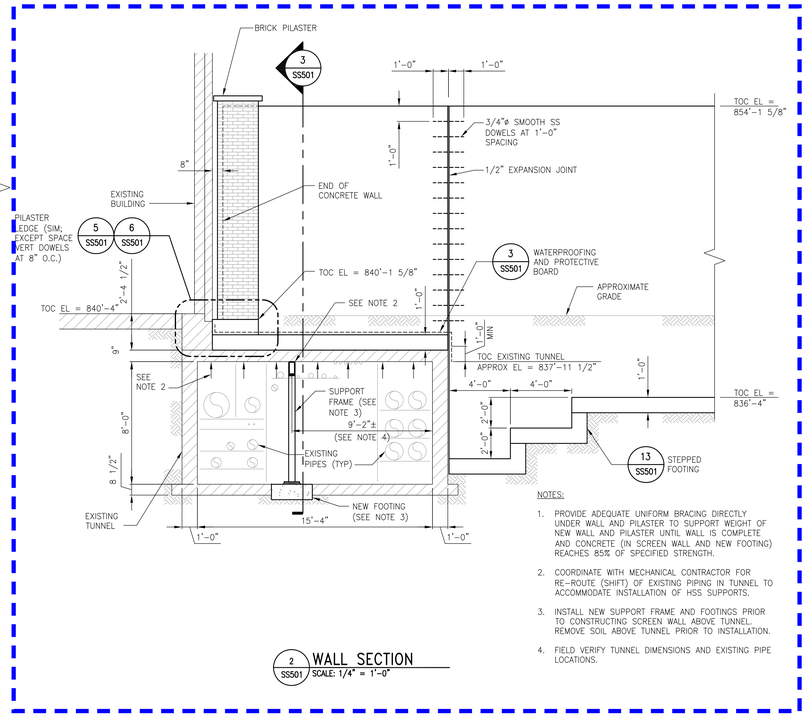

NOTES:

1. PROVIDE ADEQUATE UNIFORM BRACING DIRECTLY UNDER WALL AND PILASTER TO SUPPORT WEIGHT OF NEW WALL AND PILASTER UNTIL WALL IS COMPLETE AND CONCRETE (IN SCREEN WALL AND NEW FOOTING) REACHES 85% OF SPECIFIED STRENGTH.
2. COORDINATE WITH MECHANICAL CONTRACTOR FOR RE-ROUTE (SHIFT) OF EXISTING PIPING IN TUNNEL TO ACCOMMODATE INSTALLATION OF HSS SUPPORTS.
3. INSTALL NEW SUPPORT FRAME AND FOOTINGS PRIOR TO CONSTRUCTING SCREEN WALL ABOVE TUNNEL. REMOVE SOIL ABOVE TUNNEL PRIOR TO INSTALLATION.
4. FIELD VERIFY TUNNEL DIMENSIONS AND EXISTING PIPE LOCATIONS.

2 SS501 WALL SECTION
SCALE: 1/4" = 1'-0"

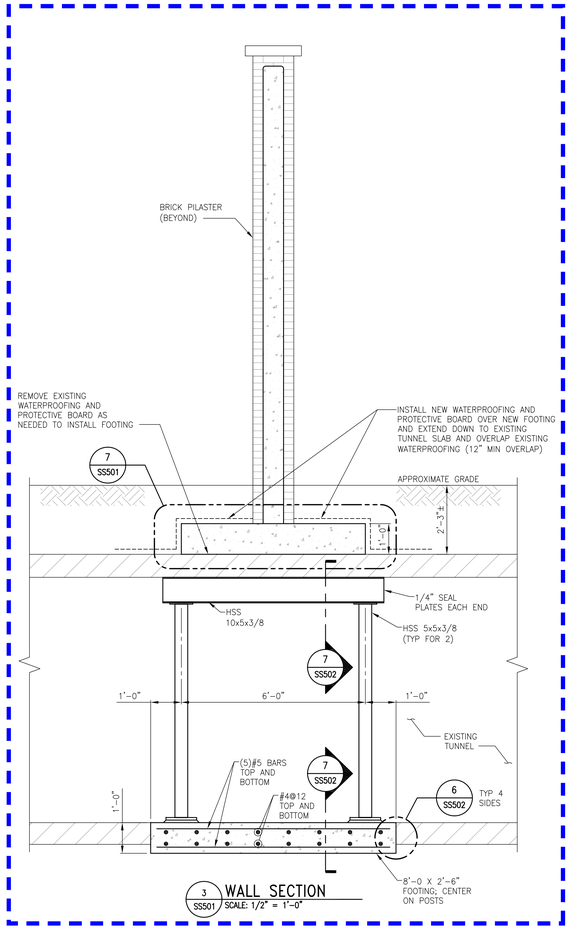

3 SS501 WALL SECTION
SCALE: 1/2" = 1'-0"

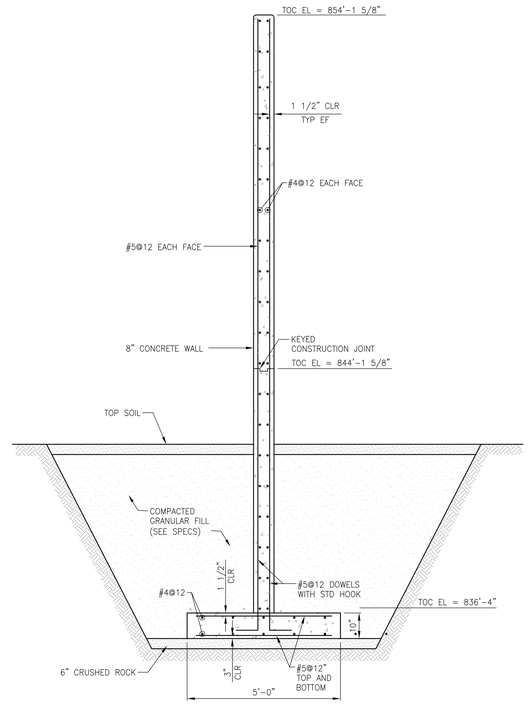

NOTES:

1. SEE ARCHITECTURAL FOR ADDITIONAL DETAILS, RECESSES, SURFACE TREATMENTS, ETC.
2. VERTICAL BAR SPLICES NOT SHOWN (SEE DETAIL 8-SS501).
3. SEE SPECIFICATIONS FOR SPECIAL BACKFILLING REQUIREMENTS.
4. BRACE WALL UNTIL BOTH SIDES OF WALL HAVE BEEN BACKFILLED AND CONCRETE REACHES 85% OF SPECIFIED COMPRESSIVE STRENGTH.

4 SS501 WALL SECTION
SCALE: 1/2" = 1'-0"

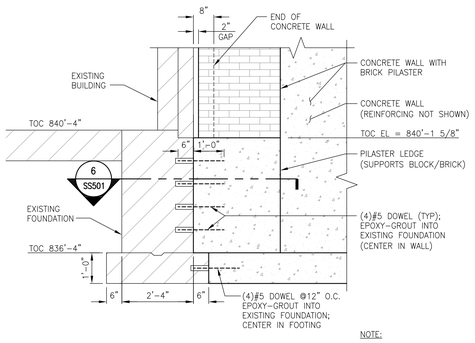

NOTE:

1. COORDINATE BRICK LEDGE ELEVATION WITH ARCHITECTURAL.

5 SS501 PILASTER LEDGE DETAIL #1
SCALE: 1/2" = 1'-0"

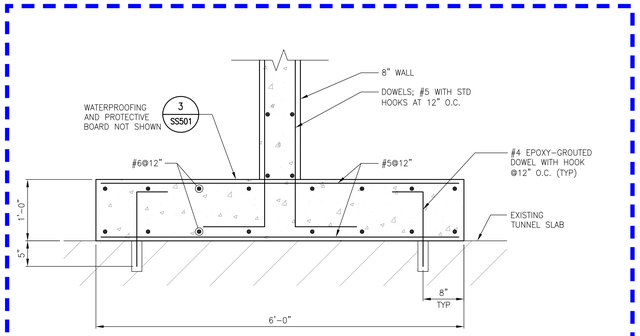

7 SS501 ENLARGED FOOTING DETAIL
SCALE: 1" = 1'-0"

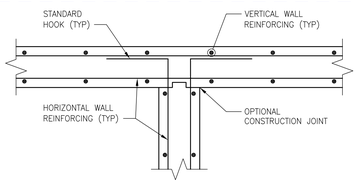

10 SS501 TYPICAL REINFORCING DETAIL AT WALL INTERSECTION
SCALE: 1" = 1'-0"

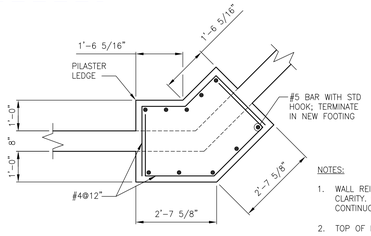

NOTES:

1. WALL REINFORCING NOT SHOWN FOR CLARITY. WALL REINFORCING SHALL BE CONTINUOUS THRU PILASTER.
2. TOP OF PILASTER LEDGE = 840'-1 5/8"

12 SS501 PILASTER LEDGE #2 SECTION
SCALE: 1/2" = 1'-0"

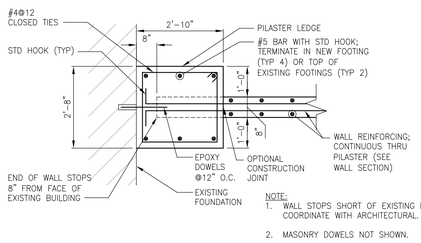

NOTE:

1. WALL STOPS SHORT OF EXISTING BUILDING. COORDINATE WITH ARCHITECTURAL.
2. MASONRY DOWELS NOT SHOWN.

6 SS501 PILASTER LEDGE SECTION
SCALE: 1/2" = 1'-0"

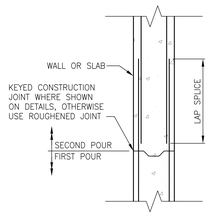

NOTE:

TRANSVERSE BARS NOT SHOWN.

8 SS501 TYPICAL CONSTRUCTION JOINT (CJ) AND BAR SPLICE DETAIL
SCALE: 1" = 1'-0"

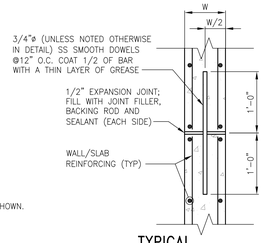

9 SS501 TYPICAL EXPANSION JOINT (EJ) DETAIL
SCALE: 1" = 1'-0"

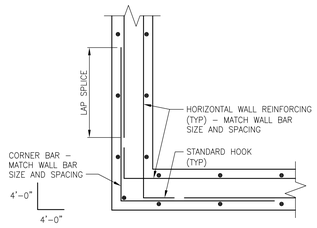

11 SS501 TYPICAL REINFORCING DETAIL AT WALL CORNER
SCALE: 1" = 1'-0"

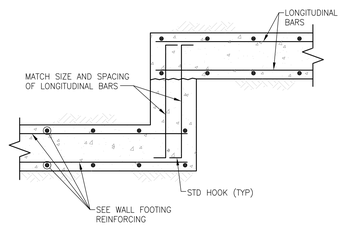

13 SS501 STEPPED FOOTING DETAIL
SCALE: 3/4" = 1'-0"

FULLY SPRINKLERED BID DOCUMENTS

Revisions:	Date

CONSULTANTS:

Stanley Consultants INC.
5775 Wayzata Boulevard, Suite 300
Minneapolis, Minnesota 55416
www.stanleyconsultants.com

I HEREBY CERTIFY THAT THIS PLAN, SPECIFICATION, OR REPORT WAS PREPARED BY ME OR UNDER MY DIRECT SUPERVISION AND THAT I AM A DULY LICENSED ENGINEER UNDER THE LAWS OF THE STATE OF MINNESOTA.
PRINT NAME: SHANE R. ECKMAN
SIGNATURE:
DATE OCTOBER 23, 2013 LICENSE # 40495

ARCHITECT/ENGINEERS:

ANDERSON ENGINEERING
ENGINEERING • ARCHITECTURE • LAND SURVEYING
ENVIRONMENTAL SERVICES • LANDSCAPE ARCHITECTURE

Anderson Engineering of Minnesota, LLC
13605 1st Avenue North
Suite 100
Plymouth, MN 55441
763-412-4000 (o) 763-412-4090 (f)
www.ae-mn.com

Drawing Title: STRUCTURAL SECTIONS AND DETAILS

Approved: Project Director
Director of Engineering: Steve Challeen
Chief of Projects: Cathie Joyce

Project Title: MINNEAPOLIS VA HEALTHCARE SYSTEM
WARD 1K
OUTDOOR RECREATION AREA

Location: MINNEAPOLIS, MINNESOTA

Date	Checked	Drawn
OCTOBER 23, 2013	SRE	CJK

Project Number: 618-13-127
Building Number: 70
Drawing Number: 1274-SS501
Dwg. 36 of 46

Office of Construction and Facilities Management
Department of Veterans Affairs

VA FORM 08-6231

Y:\134001\13482 MPLS VA HEALTH CARE SYSTEM - DESIGN OUTDOOR RECREATION AREA-WARD 1K\dwg-C\ss\Struct\SS501.dwg
jbeliner
Oct 24, 2013 - 8:42am
Aeff Filename: \ 13482_UA30_Bordert