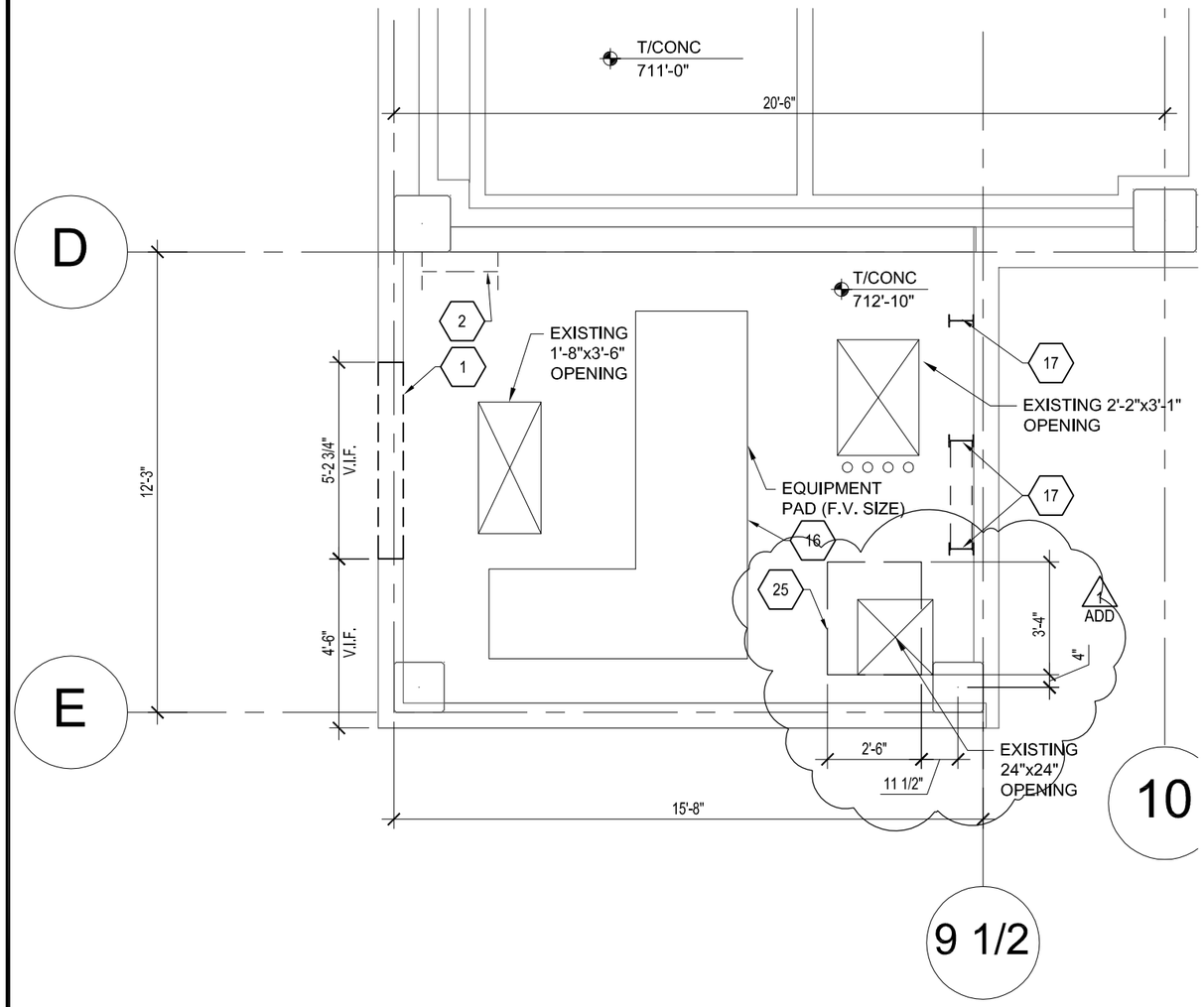

BUILDING 1 - FIRST FLOOR DEMOLITION PLAN

1/4"=1'-0"

N

KEYED DEMOLITION NOTES NOT ALL NOTES ARE RELEVANT TO THIS PAGE

1. REMOVE LOUVER AND BRICK INFILL. EXISTING STONE SILL, LINTEL AND JAMBS TO REMAIN.
2. REMOVE LADDER IN ITS ENTIRETY. PATCH BACK BRICK AND/OR CONCRETE AS REQUIRED.
3. REMOVE PIPE RAIL IN ITS ENTIRETY. PATCH BACK BRICK AND/OR CONCRETE AS REQUIRED.
4. REMOVE CLAY TILE SILO CONSTRUCTION IN ITS ENTIRETY. PATCH BACK CONCRETE AS REQUIRED.
5. REMOVE PORTION OF WALL AND/OR DUCT INDICATED FROM TOP OF SLAB TO BOTTOM OF STRUCTURE.
6. REMOVE EXISTING COILING DOOR. FRAME TO REMAIN FOR INSTALLATION OF NEW COILING DOOR.
7. REMOVE CEILING GRIDS AND TILES AS REQUIRED FOR CONSTRUCTION ACTIVITIES OF ADJACENT WALL AND SALVAGE FOR REINSTALLATION. CONTRACTOR IS RESPONSIBLE FOR TEMPORARILY SUPPORTING ALL CEILING MOUNTED ITEMS. RECORD LOCATIONS OF ELECTRICAL AND MECHANICAL ITEMS THAT MUST BE REMOVED FOR CONSTRUCTION ACTIVITIES.
8. REMOVE CEILING GRIDS AND TILES TO THE EXTENTS SHOWN. CONTRACTOR IS RESPONSIBLE FOR TEMPORARILY SUPPORTING ALL CEILING MOUNTED ITEMS. RECORD LOCATIONS OF ELECTRICAL AND MECHANICAL ITEMS THAT MUST BE REMOVED FOR CONSTRUCTIONS ACTIVITIES.
9. REMOVE PLASTER CEILING IN ITS ENTIRETY. CONTRACTOR IS RESPONSIBLE FOR TEMPORARILY SUPPORTING ALL CEILING MOUNTED ITEMS. RECORD LOCATIONS OF ELECTRICAL AND MECHANICAL ITEMS THAT MUST BE REMOVED FOR CONSTRUCTIONS ACTIVITIES.
10. REMOVE EXISTING DOOR AND FRAME. NEW FRAME, DOOR AND HARDWARE TO BE INSTALLED. SEE 1-AS9 FOR SIZE.
11. PLUMBING FIXTURE TO BE REMOVED. SALVAGE FOR REINSTALLATION.
12. REMOVE HATCH.
13. REMOVE EXISTING ACCESS DOOR. TO BE REPLACED WITH NEW ACCESS DOOR.
14. REMOVE LOUVER. FRAME TO REMAIN FOR INSTALLATION OF SPANDREL GLASS.
15. REMOVE ALL DELAMINATED AND LOOSE CONCRETE BY CHIPPING. ESTIMATE 1" DEPTH ENTIRE AREA OF SILO. REPLACE WITH CONCRETE LEVELING COMPOUND (EMACO S66 BY BASF OR EQUAL) ON ADEQUATELY PREPARED SURFACE. SLAB IS AN 11" THICK STRUCTURAL SLAB OVER COAL ROOM, SLOPED TO EXTERIOR DOOR. PROVIDE POSITIVE SLOPE IN NEW TOPPING TO DOOR ON GRID 9 AS SHOWN ON STRUCTURAL FRAMING PLAN.
16. REMOVE AND GRIND DOWN CONCRETE CURB/PAD TO CREATE LEVEL SURFACE AT SLAB. SEE DETAIL 18/1-AS11.
17. REMOVE PLASTER-COVERED STRUCTURE.
18. BASE BID AS SHOWN. ALTERNATE BID:ENCAPSULATE ASBESTOS AT THE TOP OF EACH CHASE ONLY.
19. REMOVE METAL CAGE IN ITS ENTIRETY. PATCH AND FINISH SURFACES WHERE CAGE WAS REMOVED.
20. REMOVE RADIATOR.
21. GRIND DOWN METAL PROJECTIONS TO TOP OF CONCRETE.
22. REMOVE AND REPLACE WINDOW FOR STEEL BEAM ENTRY. COORDINATE WITH STRUCTURAL.
23. TIGHTLY SEAL DOOR FOR ALL CONSTRUCTION ACTIVITIES.
24. REMOVE ALL DELAMINATED CONCRETE AT 16"x16" COLUMN. SQUARE CUT ALL EDGES OF REPAIR AREA (3/8" MIN.). REMOVE ALL UNSOUND CONCRETE (MINIMUM OF 3/4" AROUND REBAR). WIRE BRUSH AFFECTED REBAR (EXPECTED REBAR IS (8) 1"ø VERTICALS AND 3/8"ø TIES AT 12" OC). PRIME THE CLEANED REBAR WITH ZINC RICH PRIMER (MBT ZINCRICH REBAR PRIMER BY BASF, OR ZINC CLAD BY SHERWIN WILLIAMS, OR EQUAL). BASE CONCRETE SHALL HAVE A ROUGHENED PROFILE, DAMPEN WITH WATER (SURFACE SATURATED DRY), REMOVAL ALL STANDING WATER, APPLY REPAIR MATERIAL (EMACO S88 BY BASF, OR GELPATCH BY BASF, OR SIKA REPAIR 224 BY SIKA CORPORATION, OR EQUAL).
25. REMOVE CONCRETE SLAB TO THE EXTENTS SHOWN. 1 ADD

SHIVEHATTERY
ARCHITECTURE + ENGINEERING
Iowa | Illinois | Indiana | Missouri
http://www.shive-hattery.com
ILLINOIS FIRM NUMBER: 184-000214

Abestos Abatement of Building 1
VA Medical Center
Iowa City

DATE	March 26, 2014
SCALE	
DRAWN	EAS
APPROVED	DRH
FIELD BOOK	
REFERENCE DRAWING	1-AS1
REVISION	Addendum 1

PROJECT NO.
113267-0

ISSUED FOR

SD-2

| crvisitor3 | C:\shive\data\acad2010\Template\ARCH10.DWT | DATE: 02/11/2010 | Time: 15:57 |