ABBREVIATIONS

1PH	SINGLE-PHASE
1P	SINGLE POLE
2/C	TWO-CONDUCTOR
3/C	THREE-CONDUCTOR
3PH	THREE-PHASE
4/C	FOUR-CONDUCTOR
4W	FOUR-WIRE
A/C UNIT	AIR CONDITIONING UNIT
A/E	ARCHITECT/ENGINEER
AAP	ALARM ANNUNCIATOR PANEL
AC	ALTERNATING CURRENT OR ARMORED CABLE
ACC	ACCESSIBLE
ADDL	ADDITIONAL
ADJ	ADJACENT, ADJOINING
ADO	AUTOMATIC DOOR OPENER
AFC	AMPERE FRAME OR AMP FUSE ABOVE FINISHED COUNTER, AUTOMATIC FREQUENCY CONTROL, OR AVAILABLE FAULT CURRENT
AFF	ABOVE FINISHED FLOOR
AFG	ABOVE FINISHED GRADE
AH	AMPERE HOUR
AHJ	AUTHORITY HAVING JURISDICTION
AIC	AMPERE INTERRUPTING CAPACITY
ALT	ALTERNATE
AMB OR A	AMBIENT
AMP	AMPERE
ARCH	ARCHITECT
ASC	AMPS SHORT CIRCUIT
AT	AMPERE TRIP
ATS	AUTOMATIC TRANSFER SWITCH
AUTO	AUTOMATIC
AV	AUDIO VISUAL
BAT	BATTERY
BC	BARE COPPER
BD	BOARD
BFF	BELOW FINISH FLOOR
BIL	BASIC INSULATION LEVEL
BLDG	BUILDING
BPIP	BOILER PLANT INSTRUMENTATION
BRKR	PANEL
BYP	BREAKER BY PASS
C	CONDUIT
CAB	CABINET
CALC	CALCULATE
CAP	CAPACITY
CAT	CATALOG
CATV	COMMUNITY ANTENNA TELEVISION
CCR	CONTROL CONTACTOR
CCTV	CLOSED CIRCUIT TELEVISION
cd	CANDELA
CD	CONSTRUCTION DOCUMENTS
CF	CONTRACTOR FURNISHED
CF/CI	CONTRACTOR FURNISHED INSTALLED
CF/OI	CONTRACTOR FURNISHED EQUIPMENT
CFE	FURNISHED/CONTRACTOR INSTALLED FURNISHED/OWNER INSTALLED
CHW	CHILLED WATER
CHWP	CHILLED WATER PUMP
CKT	CIRCUIT
CKT BRKR	CIRCUIT BREAKER
CLF	CURRENT LIMITING FUSE
CLG	CEILING
CMU	CONCRETE MASONRY UNIT
COAX	COAX CABLE
COMM	COMMUNICATION
COMPT	COMPARTMENT
CONC	CONCRETE
CONT	CONTINUE
CONTR	CONTRACTOR
COORD	COORDINATE
CPT	CONTROL POWER TRANSFORMER
CRI	COLOR RENDERING INDEX
CT	CURRENT TRANSFORMER
CTV	CABLE TELEVISION
CU	COPPER
CU FT	CUBIC FEET
CUR	CURRENT
DB	DECIBEL OR DIRECT BURIAL
DC	DIRECT CURRENT
DCP	DIMMER CONTROL PANEL
DEG C	DEGREES CELSIUS
DEG F	DEGREES FAHRENHEIT
DEMO	DEMOLITION
DIAG	DIAGRAM
DISC	DISCONNECT
DISTR	DISTRIBUTION
DISTR PNL	DISTRIBUTION PANEL
DMR SW	DIMMER SWITCH
DN	DOWN
DPDT	DOUBLE POLE, DOUBLE THROW
DPST	DOUBLE POLE, SINGLE THROW
DRSW	DOOR SWITCH
DS	DISCONNECT SWITCH
DWG	DRAWING
EC	EMPTY CONDUIT
EG	EQUIPMENT GROUND
EL	ELEVATION
ELEC	ELECTRIC OR ELECTRICAL
ELEV	ELEVATOR
EMCP	EMERGENCY MONITORING CONTROL PANEL
EMER	EMERGENCY
EMI	ELECTROMAGNETIC INTERFERENCE
EMT	ELECTRICAL METALLIC TUBING
ENCL	ENCLOSURE
EPO	EMERGENCY POWER OFF
EPRF	EXPLOSION PROOF
ESMT	EASEMENT
EWC	ELECTRIC WATER COOLER
EWH	ELECTRIC WATER HEATER
EXIST	EXISTING
FA	FIRE ALARM
FAAP	FIRE ALARM ANNUNCIATOR PANEL
FABL	FIRE ALARM BELL
FABX	FIRE ALARM BOX
FACP	FIRE ALARM CONTROL PANEL
FC	FOOTCANDLE
FI	FILM ILLUMINATOR
FIXT	FIXTURE
FLA	FULL LOAD AMPS
FLEX	FLEXIBLE METALLIC CONDUIT
FLT	FLOODLIGHT
FLUOR	FLUORESCENT
FLUOR FIX	FLUORESCENT FIXTURE
FOUTT	TELEPHONE FLOOR OUTLET
FP	FIRE PROTECTION
FT	FEET OR FOOT
FU SW	FUSED SWITCH
FVNR	FULL VOLTAGE NON-REVERSING
FVR	FULL VOLTAGE REVERSING
G OR GND	GROUND OR GENERATOR
GEN	GENERATOR
GFCI	GROUND FAULT CIRCUIT INTERRUPTER
GTB	GROUND TERMINAL BOX
HID	HIGH INTENSITY DISCHARGE
HOA	HAND-OFF-AUTOMATIC
HP	HORSEPOWER
HT	HEIGHT
HZ	HERTZ
IESNA	ILLUMINATION ENGINEERING SOCIETY OF NORTH AMERICA
IMC	INTERMEDIATE METAL CONDUIT
INCAND	INCANDESCENT
IR	INFRARED
IWH	INSTANTANEOUS WATER HEATER
J-BOX	JUNCTION BOX
kV	KILOVOLT
kVA	KILOVOLT AMPERE
kVAH	KILOVOLT AMPERE PER HOUR
kVAR	KILOVOLT AMPERE REACTIVE
kW	KILOWATT
kWH	KILOWATT HOUR
kWHM	KILOWATT HOUR METER
LED	LIGHT EMITTING DIODE
LF	LINEAR FEET (FOOT)
LM	LUMEN
LP	LIGHT POLE
LPS	LOW PRESSURE SODIUM
LRA	LOCKED ROTOR AMPS
LTCP	LOCAL TEMPERATURE CONTROL PANEL
LT	LIGHT
LTG	LIGHTING
LTG PNL	LIGHTING PANEL
LTNG	LIGHTNING
LV	LOW VOLTAGE
MATV	MASTER ANTENNA TELEVISION SYSTEM
MAX	MAXIMUM
MC	METAL-CLAD
MCA	MINIMUM CIRCUIT AMPS
MCB	MAIN CIRCUIT BREAKER
MCC	MOTOR CONTROL CENTER
MDP	MAIN DISTRIBUTION PANEL
MECH	MECHANICAL
MG	MOTOR GENERATOR
MH	MANHOLE
MIN	MINIMUM
MOCP	MAXIMUM OVERCURRENT PROTECTION
MLO	MAIN LUGS ONLY
MT	MOUNT
MTD	MOUNTED
MTG	MOUNTING
MTS	MANUAL TRANSFER SWITCH
MV	MEDIUM VOLTAGE
MVA	MEGAVOLT-AMPERE
MW	MEGAWATT MICROWAVE
NA	NOT APPLICABLE
NEC	NATIONAL ELECTRICAL CODE
NEMA	NATIONAL ELECTRICAL MANUFACTURERS ASSOCIATION
NEUT OR N	NEUTRAL
NFPA	NATIONAL FIRE PROTECTION ASSOCIATION
NIC	NOT IN CONTRACT
NL	NIGHT LIGHT
NO	NORMALLY OPEN
NS	NO SCALE
NTS	NOT TO SCALE
OC	ON CENTER
OD	OUTSIDE DIAMETER
OL	OVERLOAD
P	POLE
PA	PUBLIC ADDRESS
PB	PANELBOARD, PULL BOX, OR PUSHBUTTON
PBPU	PREFABRICATED BEDSIDE PATIENT UNIT
PCB	POLYCHLORINATED BIPHENYL
PEC	PHOTOELECTRIC CELL
PED	PEDESTAL
PEND	PENDANT
PF	POWER FACTOR
PH	PHASE
PNL	PANEL
POD	POWER OPERATED DAMPER
PT	POTENTIAL TRANSFORMER
PTRV	POWER TYPE ROOF VENTILATION
PVC	POLYVINYL CHLORIDE (PLASTIC)
PWR	POWER
RCP	REFLECTED CEILING PLAN
REC	RECESSED
RECPT	RECEPTACLE
RGS	RIGID GALVANIZED STEEL
RM	ROOM
RMS	ROOT MEAN SQUARE
REQD	REQUIRED
SCC	SHORT CIRCUIT CAPACITY
SES	SERVICE ENTRANCE SECTION
SD	SMOKE DETECTOR
SF	SQUARE FOOT (FEET)
SHT	SHEET
SI	INTERNATIONAL SYSTEM OF UNITS
SPEC	SPECIFICATION
SPST	SINGLE POLE, SINGLE THROW
SURF	SURFACE
SW	SWITCH
SWBD	SWITCHBOARD
SWGR	SWITCHGEAR
TC	TIME CLOCK
TEL	TELEPHONE
TP	TWISTED PAIR
TPS	TWISTED PAIR SHIELDED
TTB	TELEPHONE TERMINAL BOARD
TV	TELEVISION
TYP	TYPICAL
UFD	UNDERFLOOR DUCT
UGND	UNDERGROUND
UL	UNDERWRITERS LABORATORY
UON	UNLESS OTHERWISE NOTED
UPS	UNINTERRUPTIBLE POWER SUPPLY
UTIL	UTILITY
V	VOLT
VA	VOLT AMPERE
VAR	VOLT AMPERE REACTIVE
VFD	VARIABLE FREQUENCY DRIVE
VOLT	VOLTAGE
W	WATT
WH	WATER HEATER
WP	WEATHERPROOF
XFER	TRANSFER
XFMR	TRANSFORMER

SYMBOLS (AS APPLICABLE)

FLOOR WALL CEILING

- DUPLEX
- QUADRUPLEX
- DUPLEX-VOICE-DATA
- GFCI DUPLEX
- SIMPLEX
- EMERGENCY DUPLEX
- EMERGENCY QUADRUPLEX
- EMERGENCY SIMPLEX
- DUPLEX-VOICE
- DUPLEX-DATA
- QUAD-VOICE
- QUAD-VOICE-DATA
- QUAD-DATA
- JUNCTION BOX
- POKE THRU
- COUNTERTOP DUPLEX
- ISOLATED GROUND DUPLEX
- ISOLATED GROUND SIMPLEX
- EXPLOSION PROOF DUPLEX
- EXPLOSION PROOF SIMPLEX
- SPLIT WIRE
- SPECIAL OUTLET
- MULTI OUTLET SURFACE RACEWAY

FLOOR WALL CEILING

- VOICE OUTLET
- DATA OUTLET
- VOICE-DATA
- CARD READER
- EMERGENCY BREAK GLASS
- PUSH BUTTON
- SPEAKER - AV
- TELCOM GROUNDING BUS BAR
- TELEPHONE BACKBOARD
- 1#12, 1#12, 1#12 — DEMOTE HOT WIRE, NEURTAL WIRE AND GROUND WIRE SIZES AND QUANTITY (RESPECTIVELY)
- 3/4" CONDUIT WITH 2#12 WIRES, UON. GROUND WIRE NOT SHOWN.
- 3/4" CONDUIT WITH 3#12 WIRES, UON. GROUND WIRE NOT SHOWN.
- 3/4" CONDUIT WITH 4#12 WIRES, UON. GROUND WIRE NOT SHOWN.
- 1LA-1,3,5 — CONDUIT HOMERUN TO PANEL BOARD 1LA WITH CIRCUIT 1,3,5
- CAPPED CONDUIT
- CONDUIT RUN UNDERGROUND OR UNDER THE FLOOR SLAB
- CONDUIT TURNING DOWN
- CONDUIT TURNING UP
- CONDUIT BREAK

FLOOR WALL CEILING

- RECESSED DOWNLIGHT
- 1X4 SURFACE MOUNTED LIGHT
- 2X4 SURFACE MOUNTED LIGHT
- 4FT WALL MOUNTED LIGHT
- 1X4 EMERGENCY LIGHT
- 2X4 EMERGENCY LIGHT
- 2X4 RECESSED LIGHT
- EXIT SIGN 1 FACE
- EXIT SIGN 1 FACE LEFT ARROW
- EXIT SIGN 2 FACE LEFT ARROW

FLOOR WALL CEILING

- LIGHT SWITCH - TIME OPERATED
- LIGHT SWITCH - SINGLE POLE
- LIGHT SWITCH - THREE WAY
- LIGHT SWITCH - KEY OPERATED
- LIGHT SWITCH - WITH PILOT LIGHT
- SWITCH - WITH THERMAL OVERLOAD
- DIMMER
- OCCUPANCY SENSOR
- PHOTOCELL
- OCCUPANCY SENSOR POWER PACK
- WALLMOUNTED OVERRIDE SWITCH
- DISTRIBUTION BOARD
- 480/277V OR 208/120V RECESSED PANEL
- 480/277V OR 208/120V SURFACE MOUNTED PANEL
- TRANSFORMER
- DISCONNECT SWITCH
- SWITCH - MOTOR RATED
- FUSED DISCONNECT SWITCH
- MAGNETIC MOTOR STARTER - NEMA SIZE 1 INDICATED
- STARTER-DISCONNECT SWITCH
- MOTOR
- RELAY
- VARIABLE FREQUENCY DRIVE
- PULL BOX
- MANHOLE
- CABLE TRAY
- THERMOSTAT
- DIFFERENTIAL PRESSURE SENSOR

- TERMINAL BLOCK
- NORMALLY CLOSED CONTACT
- NORMALLY OPEN CONTACT
- THROW CONTACT - SINGLE
- THROW CONTACT - DOUBLE
- SWITCH - CIRCUIT CLOSED
- SWITCH - CIRCUIT OPEN

FLOOR WALL CEILING

- MANUAL PULL STATION
- ADDRESSABLE INTERFACE MODULE
- WATER FLOW SWITCH
- TAMPER SWITCH
- PRESSURE SWITCH
- SMOKE-HEAT DETECTOR
- SMOKE DETECTOR
- SMOKE DETECTOR - IONIZATION OF COMBUSTION
- SMOKE DETECTOR - PHOTOELECTRIC OF COMBUSTION
- HEAT DETECTOR
- HORN
- SPEAKER-STROBE
- STROBE LIGHT UNIT
- AUTOMATIC DOOR
- DOOR HOLDER
- FIRE ALARM CONTROL PANEL
- FIRE ALARM TERMINAL CABINET
- REMOTE ANNUNCIATOR PANEL
- DUCT DETECTOR
- SMOKE DETECTOR
- FUSED DISCONNECT SWITCH
- RELAY MODULE
- MONITOR MODULE

- CIRCUIT BREAKER SWITCH
- FUSE - INLINE
- FUSE SWITCH
- FUSED-SWITCH BUS PLUG
- CIRCUIT BREAKER - ENCLOSED
- KIRK KEY INTERLOCK
- BUSDUCT
- SWITCHGEAR BUSWAY
- GROUND FAULT RELAY
- AMMETER
- DIGITAL METER U.O.N.
- TRANSFORMER - DELTA WYE-GROUNDED
- ATS - 3-POLE U.O.N. BP - WITH BYPASS ISOLATION
- BATTERY
- GENERATOR
- PANEL
- GROUND TEST WELL
- GROUND CABLE CONNECTION
- GROUND ROD - MIN. 3/4"□ x 10' LONG
- GROUND PLATE - WALL MOUNT
- GROUND PLATE - FLOOR MOUNT
- AIR TERMINAL - LIGHTNING ARRESTOR
- EQUIPMENT CONNECTION
- DIAMETER
- SQUARE FEET
- POINT OF CONNECTION
- POINT OF DISCONNECTION
- 1 E-201 — SYMBOLS SCALE: NOT TO SCALE
- TITLE MARK DETAIL OR PLAN NUMBER - 1 DETAIL OR PLAN REFERENCE LOCATION FOUND IN E-201
- 1 E-501 — SECTION MARK A2T SECTION NUMBER - 1 SECTION FOUND IN E-501
- 2 E-201 — DETAIL BOUNDARY B DETAIL NUMBER - 2
- SHEET KEYNOTE
- REVISION CLOUD (DELTA 1)
- 1 E-501 — DETAIL REFERENCE DETAIL NUMBER - 1 DETAIL FOUND IN E-501
- FEEDER TAG

GENERAL NOTES

FIRE ALARM GENERAL NOTES

1. WIRE RUNS ON FLOOR PLANS ARE SHOWN DIAGRAMATICALLY. EXACT LOCATION OF ALL WIRE RUNS TO BE DETERMINED AND RECORDED AS AS-BUILT IN FIELD.
2. MINIMUM 3/4" CONDUIT.
3. THE FIRE ALARM SYSTEM WILL CONFORM TO ARTICLE 760 OF NATIONAL ELECTRICAL CODE AND NFPA 72.
4. AN APPROVED SET OF FIRE ALARM SHOP DRAWINGS WILL BE ON THE SITE AND USED FOR INSTALLATION.
5. UPON COMPLETION OF THE INSTALLATION OF THE ALARM SYSTEM, THE CONTRACTOR WILL COORDINATE WITH OTHER TRADES TO TEST INTERCONNECTIONS OF THE FIRE ALARM SYSTEM WITH OTHER BUILDING SYSTEMS AND EQUIPMENT. ONCE ALL FUNCTIONS INDICATED IN THE FIRE ALARM SYSTEM SEQUENCE OPERATIONS HAVE BEEN VERIFIED THROUGH TESTING, AN ACCEPTANCE TEST MUST BE PERFORMED IN THE PRESENCE OF THE LIFE SAFETY ENGINEER OR REPRESENTATIVE. THE ACCEPTANCE TEST MUST SUCCESSFULLY DEMONSTRATE ALL FUNCTIONS REQUIRED AN SPECIFIED HEREIN. A MINIMUM OF 48 HOURS NOTICE TO THE COTR OF VA REPRESENTATIVE FOR ANY INSPECTIONS AND/OR TESTING.
6. THE BUILDING GENERATORS SHALL PROVIDE SECONDARY SOURCE OF POWER FOR FIRE ALARM SYSTEM.
7. EXISTING INTERFACE TO FAN CONTROL / ELEVATOR CAPTURE TO BE REUSED.
8. FIRE ALARM NETWORK VOICE AND DATA TO BE FIBER OPTIC.
9. EXISTING DUCT DETECTOR LOCATIONS REUSED ASSUMED TO BE PROPERLY LOCATED.

SHEET INDEX

NUMBER	NAME	SCALE
E001A	ELECTRICAL COVER SHEET	NONE
ELD101A	ADMIN LIGHTING DEMOLITION PLAN - 1ST FLOOR	1/4"=1'-0"
EL101A	ADMIN LIGHTING PLAN - 1ST FLOOR	1/4"=1'-0"
EP101A	ADMIN POWER PLAN - 1ST FLOOR	1/4"=1'-0"
EP102A	ADMIN POWER PLAN - ROOF	1/4"=1'-0"
E501A	ELECTRICAL DETAILS	NONE
E601A	PANEL SCHEDULES	NONE
E701A	SINGLE LINE DIAGRAM	NONE

FINAL BID DOCUMENTS

HILLIARD ARCHITECTS INC. COPYRIGHT

Revisions:	Date

CONSULTANTS:

REGISTERED PROFESSIONAL ENGINEER — VICTOR G. STEFFEN — No. 11872 — Exp. 12/31/14 — ELECTRICAL — STATE OF CALIFORNIA

ARCHITECT/ENGINEERS:

HILLIARD ARCHITECTS, INC
251 Post Street, Suite 620
San Francisco, CA 94108-5017
Tel 415 989 6400, Fax 415 989 3056
www.HilliardArchitects.com

Drawing Title: ELECTRICAL COVER SHEET

Approved: Project Director

Project Title: VA PA BLDG 6 ADMINISTRATIVE EXPANSION

Location: VAPAHCS, PALO ALTO CAMPUS, 3801 MIRANDA AVE. PALO ALTO, CA 94304

Date: 04.17.14 | Checked: SHG | Drawn: HP

Project Number: 640-13-121P

Building Number: 6

Drawing Number: E001A

Dwg. of

Office of Construction and Facilities Management

Department of Veterans Affairs

VA FORM 08-6231

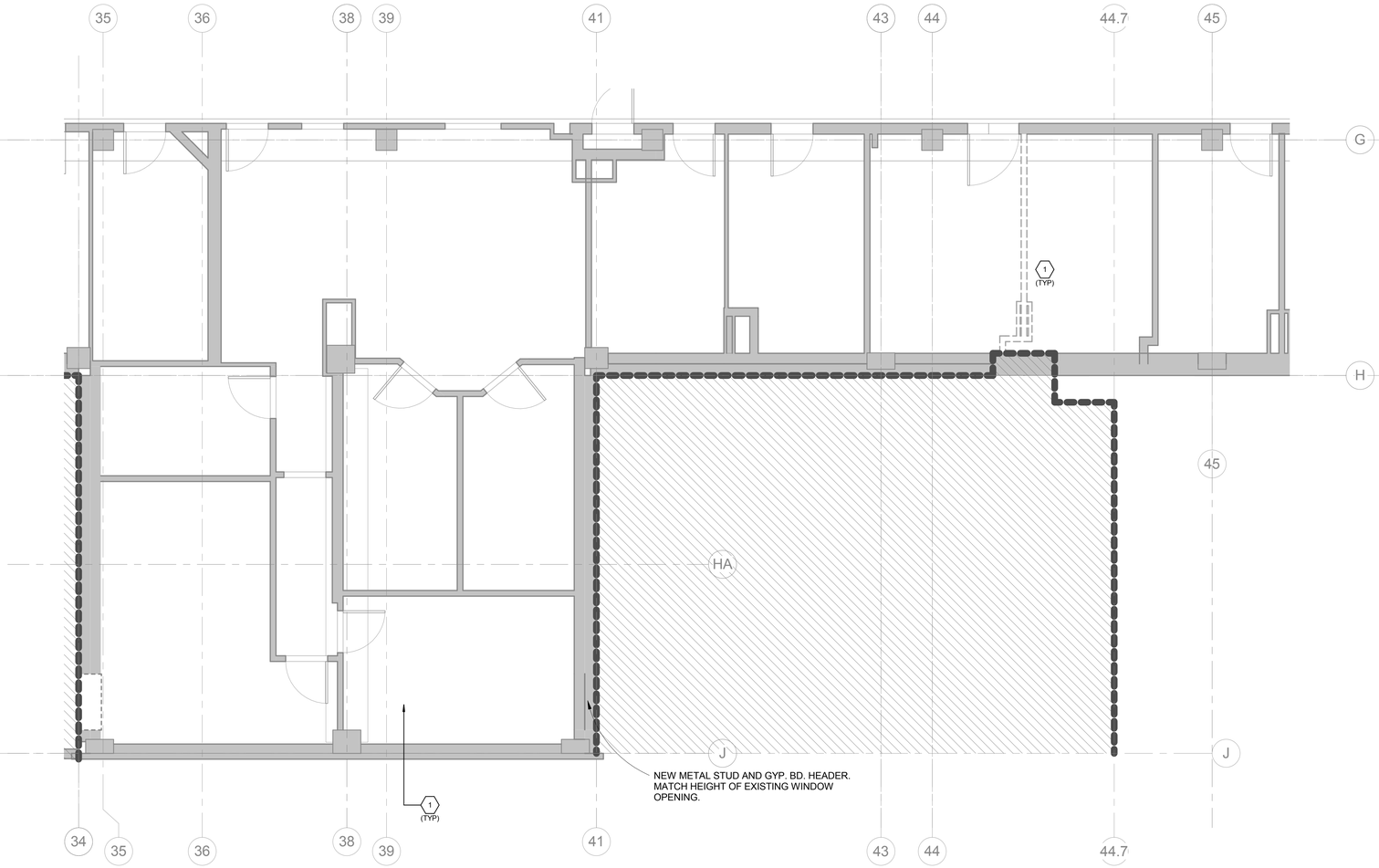

1 ADMIN LIGHTING DEMOLITION PLAN - 1ST FLOOR
1/4" = 1'-0"

KEY NOTES:

1 DEMO LIGHT FIXTURES AND RELATED CONTROL DEVICES. REMOVE CONDUIT AND WIRING BACK TO THE SOURCE.

SHEET NOTES:

1. DEMO (E) ELECTRICAL DEVICES ON WALLS TO BE REMOVED WITHIN THE SCOPE OF WORK AREA. REMOVE (E) LIGHTS AND CONTROL DEVICES.
2. REMOVE CONDUIT AND WIRES BACK TO THE SOURCE.
3. CONTRACTOR TO PERFORM CIRCUIT TRACING PRIOR TO DEMOLITION OF ANY DEVICES AND LIGHTING.
4. SCOPE OF WORK AREA ARE SHOWN WITHOUT HATCHING. HATCHED AREA ARE OUT OF SCOPE.
5. EXISTING LIGHTS TO REMAIN SHALL BE MAINTAINED TO BE POWERED AND FUNCTIONAL.
6. REMOVE ALL ACCESSIBLE ABANDONED WIRING OF ALL TYPES, OR CAP AND LABEL IN JUNCTION BOX FOR RE-USE, IN COMPLIANCE WITH THE NATIONAL ELECTRICAL CODE.
7. MAINTAIN AND RESTORE, IF INTERUPTED, ALL CONDUITS AND CONDUCTORS PASSING THROUGH RENOVATED AREAS AND SERVICING UNDISTURBED AREAS.

0' 4' 8' 16'

NORTH

FINAL BID DOCUMENTS

HILLIARD ARCHITECTS INC. COPYRIGHT

Revisions:	Date

CONSULTANTS:

REGISTERED PROFESSIONAL ENGINEER
VICTOR G. STEFFEN
No. 11872
Exp. 12/31/14
ELECTRICAL
STATE OF CALIFORNIA

ARCHITECT/ENGINEERS:

ESTABLISHED 1988 HILLIARD ARCHITECTS GOING GREEN

HILLIARD ARCHITECTS, INC
251 Post Street, Suite 620
San Francisco, CA 94108-5017
Tel 415 989 6400, Fax 415 989 3056
www.HilliardArchitects.com

Drawing Title	**ADMIN LIGHTING DEMOLITION PLAN - 1ST FLOOR**
Approved: Project Director	
Project Title	**VA PA BLDG 6 ADMINISTRATIVE EXPANSION**
Location	**VAPAHCS, PALO ALTO CAMPUS 3801 MIRANDA AVE. PALO ALTO, CA 94304**
Date	**04.17.14**
Checked	**SHG**
Drawn	**Author**
Project Number	**640-13-121P**
Building Number	**6**
Drawing Number	**ELD101A**
Dwg. of	

Office of Construction and Facilities Management

Department of Veterans Affairs

VA FORM 08-6231

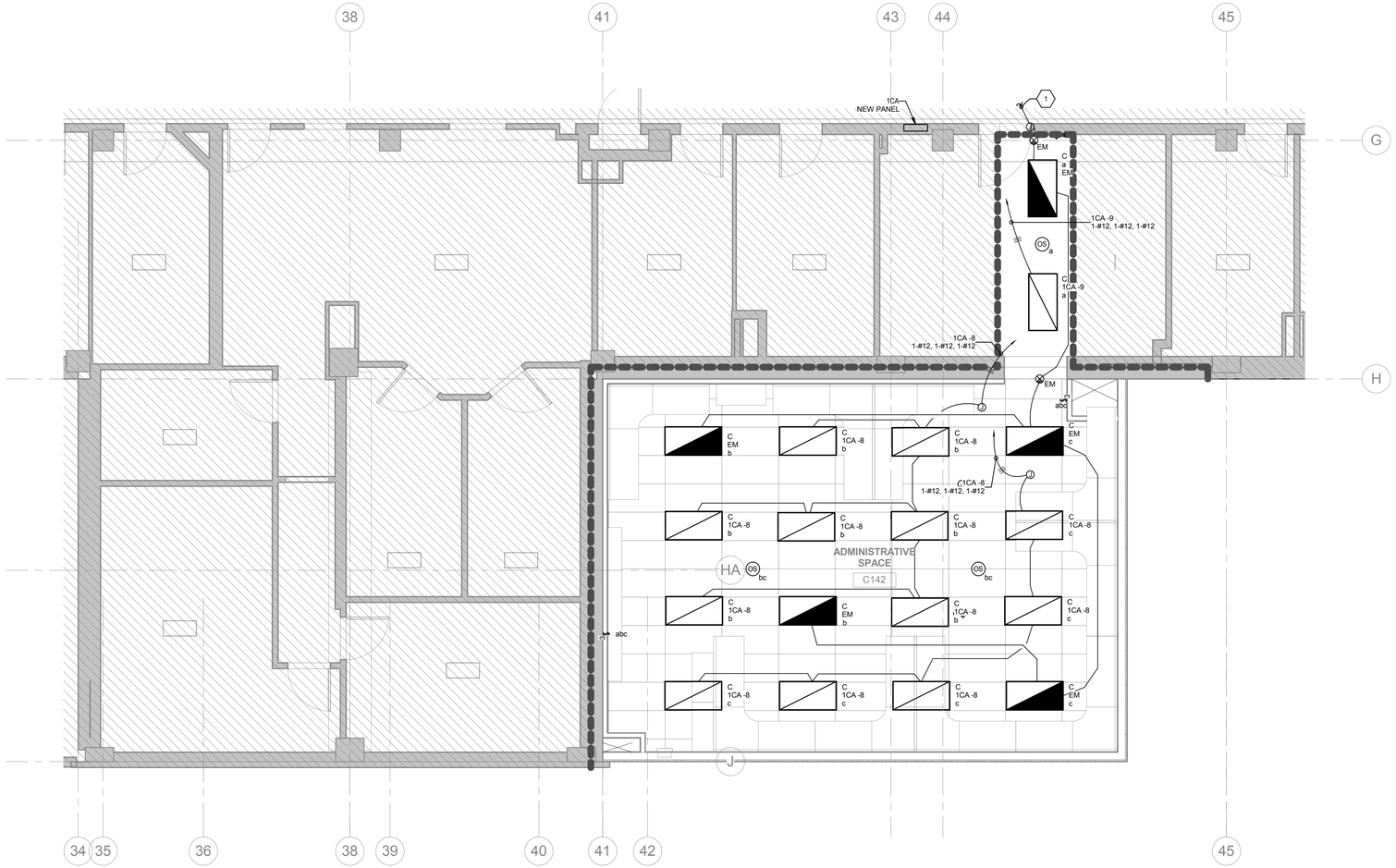

1 ADMIN LIGHTING PLAN - 1ST FLOOR
1/4" = 1'-0"

LIGHTING FIXTURES SCHEDULE						
TYPE	DESCRIPTION	VOLTS	WATTS	LAMPS	MANUFACTURER:	CAT:
C	2'X4' LED TROFFER LENS	120V	45	2T5	COOPER LIGHTING	24EN-LD1-45-UNV-L835-CDI-U

KEY NOTES:

1. EMERGENCY LIGHTS AND EXIT SIGN CIRCUIT SHALL BE TIED TO EXISTING EMERGENCY CIRCUIT IN THE CORRIDOR AREA. CONTRACTOR TO FIELD VERIFY AND CIRCUIT TRACE.

SHEET NOTES:

1. LIGHTING FIXTURES. REFER TO ARCHITECTURAL DRAWINGS FOR EXACT LOCATION AND MOUNTING HEIGHT.
2. EXIT SIGN SHALL MATCH BUILDING STANDARD.
3. PROVIDE DUAL TECHNOLOGY OCCUPANCY SENSOR WITH ULTRASONIC AND INFRARED CAPABILITIES.

0' 4' 8' 16'

NORTH

FINAL BID DOCUMENTS

HILLIARD ARCHITECTS INC. COPYRIGHT

Revisions: Date

CONSULTANTS:

REGISTERED PROFESSIONAL ENGINEER
VICTOR G. STEFFN
No. 11872
Exp. 12/31/14
ELECTRICAL
STATE OF CALIFORNIA

ARCHITECT/ENGINEERS:

ESTABLISHED 1988 HILLIARD ARCHITECTS GOING GREEN

HILLIARD ARCHITECTS, INC
251 Post Street, Suite 620
San Francisco, CA 94108-5017
Tel 415 989 6400, Fax 415 989 3056
www.HilliardArchitects.com

Drawing Title: **ADMIN LIGHTING PLAN - 1ST FLOOR**

Approved: Project Director

Project Title: **VA PA BLDG 6 ADMINISTRATIVE EXPANSION**

Location: **VAPAHCS, PALO ALTO CAMPUS 3801 MIRANDA AVE. PALO ALTO, CA 94304**

Date: **04.17.14** Checked: **SHG** Drawn: **Author**

Project Number: **640-13-121P**

Building Number: **6**

Drawing Number: **EL101A**

Dwg. of

Office of Construction and Facilities Management

Department of Veterans Affairs

VA FORM 08-6231

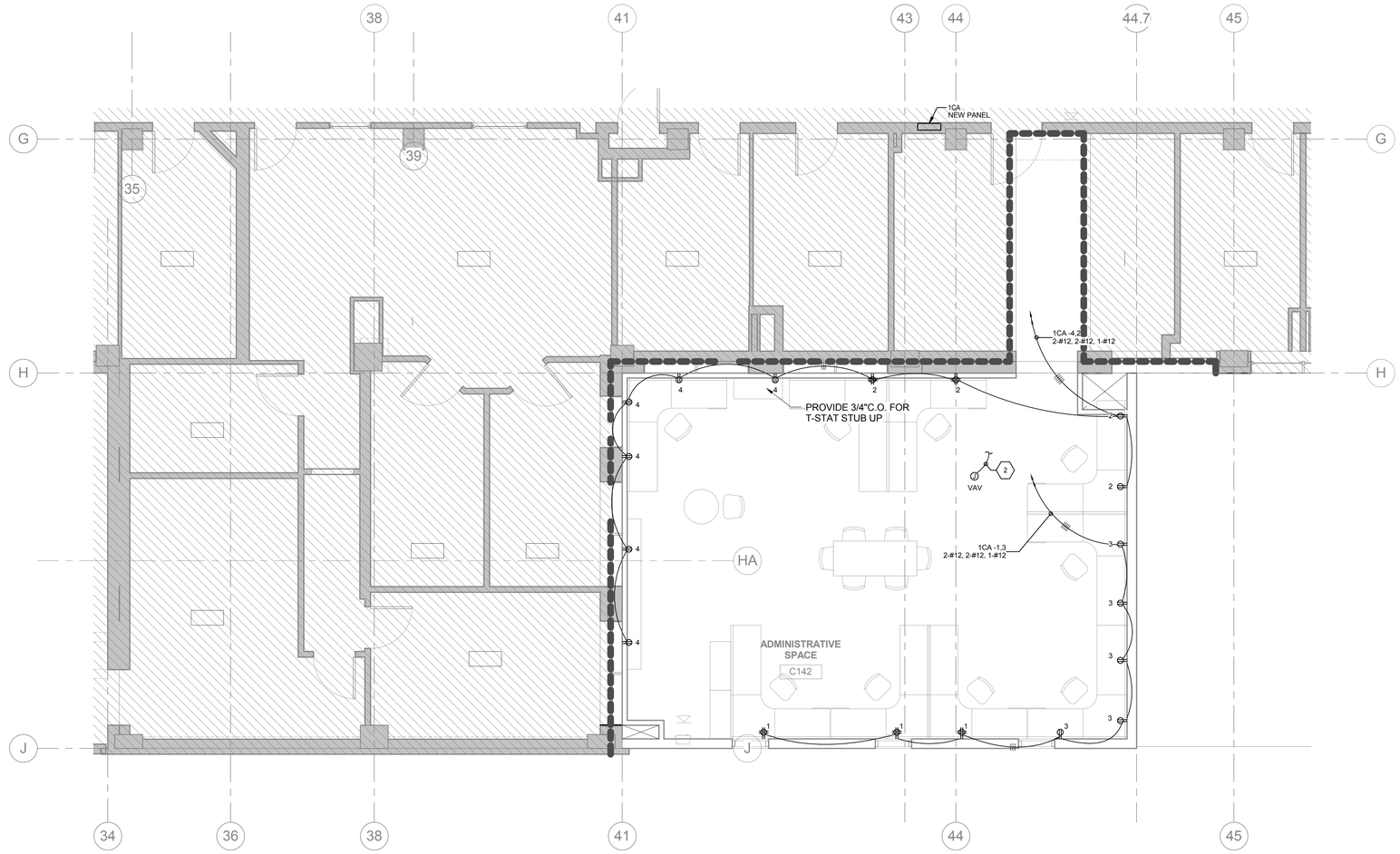

1 ADMIN POWER PLAN - 1ST FLOOR
1/4" = 1'-0"

KEY NOTES:

1. PROVIDE OUTLET BOX AND CONDUIT STUB-UP ABOVE CEILING FOR FUTURE OUTLETS. PROVIDE BLANK COVER PLATE.
2. ALL VAV IN THE SCOPE OF WORK SHALL BE TIED IN TO EXISTING EMERGENCY CIRCUIT IN THE CORRIDOR. COORDINATE WITH MECHANICAL CONTRACTOR FOR EXACT LOCATIONS.

SHEET NOTES:

1. ALL POWER AND DATA OUTLETS SHALL BE MOUNTED AT 18" AFF. U.O.N.
2. OUTLETS IN THE AREA OF WORK TO BE SERVED FROM PANEL 1CA.
3. COORDINATE WITH TELECOM DRAWINGS FOR LOCATION OF TEL/DATA OUTLETS.
4. NEW AND RELOCATED OUTLETS SHALL BE PROVIDED WITH NEW LABEL.
5. CONTRACTORS TO REPAIR BROKEN SURFACE MOUNTED RACEWAY AND OUTLETS.

0' 4' 8' 16'

NORTH

FINAL BID DOCUMENTS

HILLIARD ARCHITECTS INC. COPYRIGHT

Revisions:	Date

CONSULTANTS:

REGISTERED PROFESSIONAL ENGINEER
VICTOR G. STEFFEN
No. 11872
Exp. 12/31/14
ELECTRICAL
STATE OF CALIFORNIA

ARCHITECT/ENGINEERS:

ESTABLISHED 1988 HILLIARD ARCHITECTS GOING GREEN

HILLIARD ARCHITECTS, INC
251 Post Street, Suite 620
San Francisco, CA 94108-5017
Tel 415 989 6400, Fax 415 989 3056
www.HilliardArchitects.com

Drawing Title: **ADMIN POWER PLAN - 1ST FLOOR**

Approved: Project Director

Project Title: **VA PA BLDG 6 ADMINISTRATIVE EXPANSION**

Location: **VAPAHCS, PALO ALTO CAMPUS 3801 MIRANDA AVE. PALO ALTO, CA 94304**

Date: **04.17.14** | Checked: **SHG** | Drawn: **Author**

Project Number: **640-13-121P**

Building Number: **6**

Drawing Number: **EP101A**

Dwg. of

Office of Construction and Facilities Management

Department of Veterans Affairs

VA FORM 08-6231

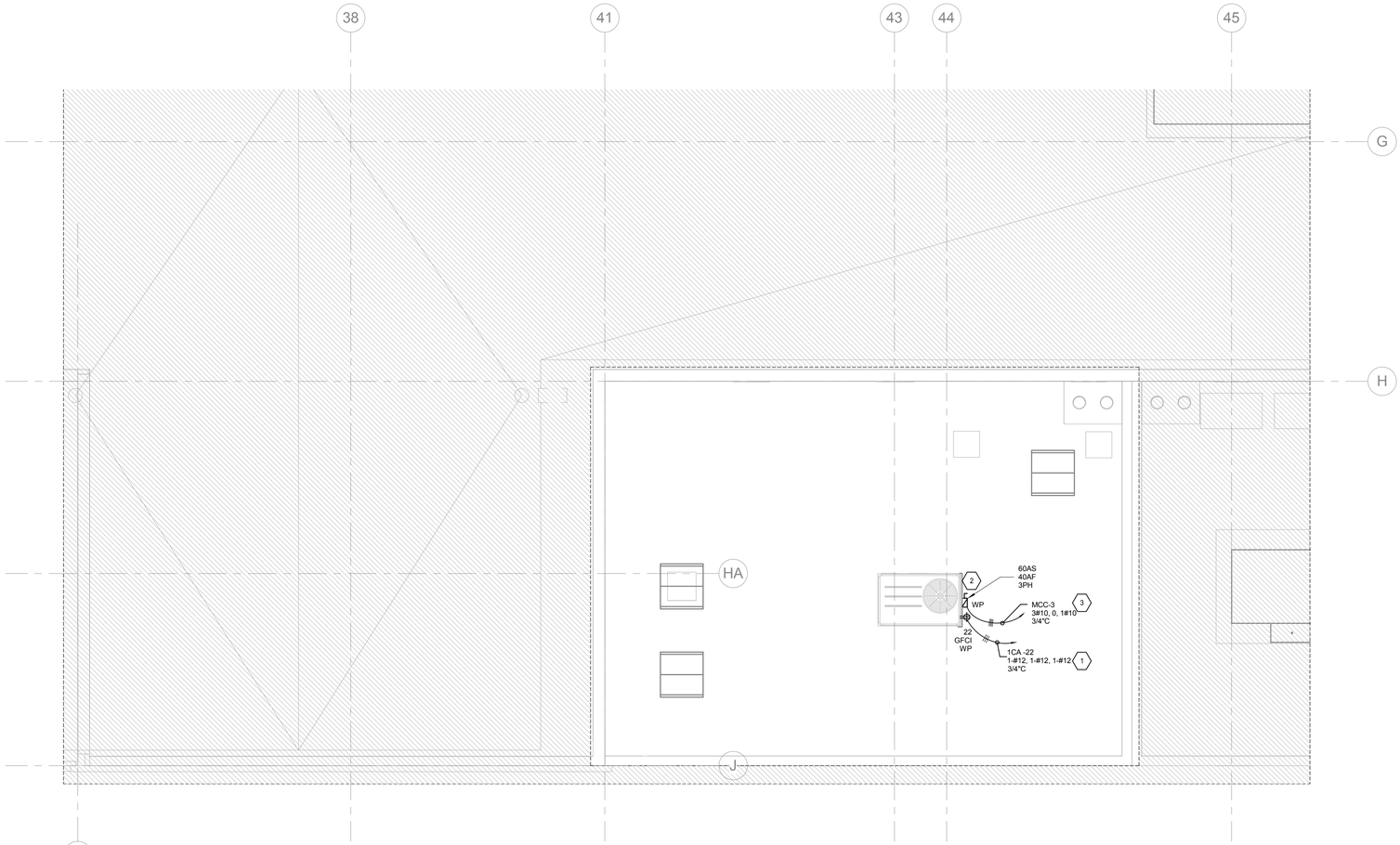

1 ADMIN ROOF PLAN - 2ND FLOOR
1/4" = 1'-0"

KEY NOTES:

1. PROVIDE WP GFCI 20A DUPLEX OUTLET AND NEMA3R WEATHERPROOF ENCLOSURE. RECEPTACLE SHALL BE MOUNTED ON A SUPPORT ASSEMBLY SHOWN IN E501A DETAIL# 3 AND 4.
2. PROVIDE UNISTRUT SUPPORT FOR PROTECTIVE EQUIPMENT AND DEVICE.
3. MCC-3 IS LOCATED IN MAIN ELECTRICAL ROOM IN 1ST FLOOR A WING. USE EXISTING SPACE IN MCC-3. PROVIDE 30A SWITCH WITH 30A FUSE IN MCC-3.

SHEET NOTES:

0' 4' 8' 16'

NORTH

FINAL BID DOCUMENTS

HILLIARD ARCHITECTS INC. COPYRIGHT

Revisions:	Date

CONSULTANTS:

REGISTERED PROFESSIONAL ENGINEER
VICTOR G. STEFFEN
No. 11872
Exp. 12/31/14
ELECTRICAL
STATE OF CALIFORNIA

ARCHITECT/ENGINEERS:

ESTABLISHED 1988 HILLIARD ARCHITECTS GOING GREEN

HILLIARD ARCHITECTS, INC
251 Post Street, Suite 620
San Francisco, CA 94108-5017
Tel 415 989 6400, Fax 415 989 3056
www.HilliardArchitects.com

Drawing Title	**ADMIN POWER PLAN - ROOF**
Approved: Project Director	
Project Title	**VA PA BLDG 6 ADMINISTRATIVE EXPANSION**
Location	**VAPAHCS, PALO ALTO CAMPUS 3801 MIRANDA AVE. PALO ALTO, CA 94304**
Date	**04.17.14**
Checked	**SHG**
Drawn	**Author**
Project Number	**640-13-121P**
Building Number	**6**
Drawing Number	**EP102A**
Dwg. of	

Office of Construction and Facilities Management

Department of Veterans Affairs

VA FORM 08-6231

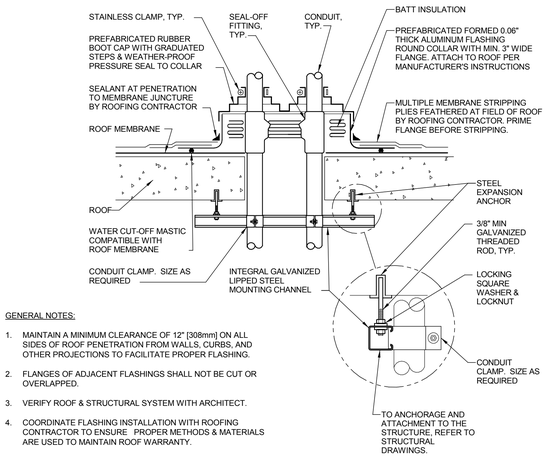

GENERAL NOTES:

1. MAINTAIN A MINIMUM CLEARANCE OF 12" [308mm] ON ALL SIDES OF ROOF PENETRATION FROM WALLS, CURBS, AND OTHER PROJECTIONS TO FACILITATE PROPER FLASHING.
2. FLANGES OF ADJACENT FLASHINGS SHALL NOT BE CUT OR OVERLAPPED.
3. VERIFY ROOF & STRUCTURAL SYSTEM WITH ARCHITECT.
4. COORDINATE FLASHING INSTALLATION WITH ROOFING CONTRACTOR TO ENSURE PROPER METHODS & MATERIALS ARE USED TO MAINTAIN ROOF WARRANTY.

ROOF PENETRATION DETAIL (4)

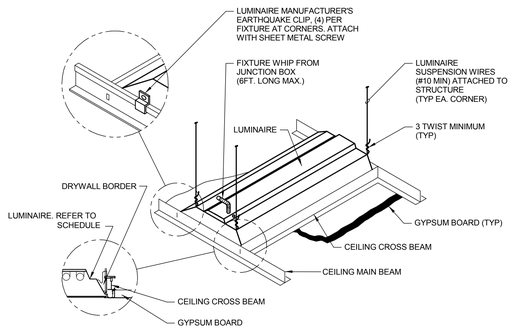

LUMINAIRE MOUNTING - GYPBOARD CEILING (1)

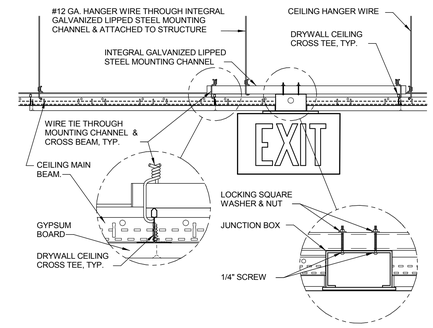

EXIT SIGN MOUNTING - GYPBOARD CEILING (2)

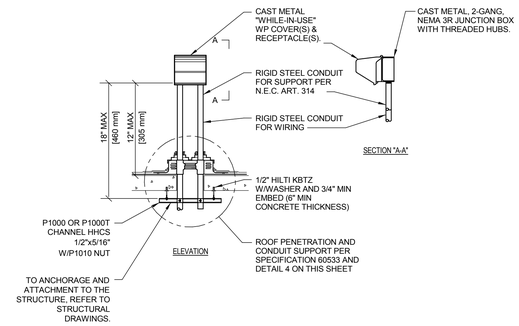

RECEPTACLE ROOF MOUNTING DETAIL (3)

FINAL BID DOCUMENTS

HILLIARD ARCHITECTS INC. COPYRIGHT

Revisions:	Date

CONSULTANTS:

REGISTERED PROFESSIONAL ENGINEER — VICTOR G. STEFFEN — No. 11872 — Exp. 12/31/14 — ELECTRICAL — STATE OF CALIFORNIA

ARCHITECT/ENGINEERS:

HILLIARD ARCHITECTS, INC
251 Post Street, Suite 620
San Francisco, CA 94108-5017
Tel 415 989 6400, Fax 415 989 3056
www.HilliardArchitects.com

Drawing Title: **ELECTRICAL DETAILS**

Approved: Project Director

Project Title: **VA PA BLDG 6 ADMINISTRATIVE EXPANSION**

Location: **VAPAHCS, PALO ALTO CAMPUS 3801 MIRANDA AVE. PALO ALTO, CA 94304**

Date: **04.17.14** | Checked: **SHG** | Drawn: **HP**

Project Number: **640-13-121P**

Building Number: **6**

Drawing Number: **E501A**

Dwg. of

Office of Construction and Facilities Management

Department of Veterans Affairs

VA FORM 08-6231

Branch Panel: 1CA

Location: Space 184
Supply From:
Mounting: Recessed
Enclosure: Type 1

Volts: 120/208 Wye
Phases: 3
Wires: 4

A.I.C. Rating: 42000
Mains Type: MLO
Mains Rating: 225 A
MCB Rating:

Notes: REFER TO SINGLE LINE DIAGRAM

CKT	Circuit Description	Trip	Poles	A		B		C		Poles	Trip	Circuit Description	CKT
1	ADMIN C142	20 A	1	1080	1080					1	20 A	ADMIN C142	2
3	ADMIN C142	20 A	1			900 VA	1080			1	20 A	ADMIN C142	4
5	CIRCULATION RECEP C142B	20 A	1					720 VA	180 VA	1	20 A	PLOTTER DED C142B	6
7	DED RECEP C142B	20 A	1	180 VA	1152					1	20 A	ADMIN LIGHTING C142	8
9	LIGHTING POWER C141, C142A	20 A	1			456 VA	360 VA			1	20 A	HALLWAY C142A	10
11	LIGHTING POWER C142B	20 A	1					192 VA	1040	1	20 A	C139 TV OUTLET	12
13	WATER BATH C143A	20 A	1	500 VA	720 VA					1	20 A	HALLWAY RECEPTACLES	14
15	CENTRIFUGE 5804R C143A	20 A	1			1920	840 VA			1	20 A	LTG C132, C140	16
17	LTG C136 - C139	20 A	1					1500	1620	1	25 A	REFRIGERATOR -20 DEGREE C140	18
19	LUNCH ROOM/LOUNGE C140 CONV	20 A	1	540 VA	900 VA					1	20 A	OFFICE C132 OUTLET	20
21	VENDING MACHINE C140	20 A	1			1000	180 VA			1	20 A	RTU-1 ROOFTOP RECEPTACLE	22
23	VENDING MACHINE C140	20 A	1					1000	720 VA	1	20 A	WORKSTATION C143A	24
25	OPEN OFFICE C139	20 A	1	720 VA	1080					1	20 A	OPEN OFFICE C139	26
27	TISSUE CULTURE C143A	20 A	1			720 VA	1080			1	20 A	OPEN OFFICE C139	28
29	WORKROOM C136, C137, C138 RECEP	20 A	1					1080	540 VA	1	20 A	CONFERENCE CONV RECEP	30
31	FREEZER C143A	20 A	1	3100	600 VA					1	20 A	LTG HALLWAY C101	32
33	Spare	0 A	1			0 VA	0 VA			1	0 A	Spare	34
35	Spare	0 A	1					0 VA	0 VA	1	0 A	Spare	36
37	Spare	0 A	1	0 VA	0 VA					1	0 A	Spare	38
39	Spare	0 A	1			0 VA	0 VA			1	0 A	Spare	40
41	Spare	0 A	1					0 VA	0 VA	1	0 A	Spare	42
			Total Load:	11652 VA		8536 VA		8592 VA					
			Total Amps:	97 A		71 A		72 A					

Legend:

Load Classification	Connected Load	Demand Factor	Estimated Demand	Panel Totals	
Receptacle	0 VA	0.00%	0 VA		
Lighting	1440 VA	100.00%	1440 VA	**Total Conn. Load:**	28780 VA
HVAC	0 VA	0.00%	0 VA	**Total Est. Demand:**	28780 VA
Kitchen Equipment - Non-Dwelling Unit	0 VA	0.00%	0 VA	**Total Conn.:**	80 A
Equipment	0 VA	0.00%	0 VA	**Total Est. Demand:**	80 A
Motor	0 VA	0.00%	0 VA		
Transformer	0 VA	0.00%	0 VA		
Power	24040 VA	100.00%	24040 VA		
Spare	0 VA	0.00%	0 VA		

Notes:
LOADS IN PANEL SHOWS NEW LOAD IN ADMIN WORK AND FUTURE LAB WORK. CONTRACTOR TO REFER AND COORDINATE WITH THE FLOOR PLAN FOR RELATED WORK.

HILLIARD ARCHITECTS INC. COPYRIGHT

FINAL BID DOCUMENTS

Revisions: Date

CONSULTANTS:

REGISTERED PROFESSIONAL ENGINEER VICTOR G. STEFFEN No. 11872 Exp. 12/31/14 ELECTRICAL STATE OF CALIFORNIA

ARCHITECT/ENGINEERS:

HILLIARD ARCHITECTS, INC
251 Post Street, Suite 620
San Francisco, CA 94108-5017
Tel 415 989 6400, Fax 415 989 3056
www.HilliardArchitects.com

Drawing Title: **PANEL SCHEDULES**
Approved: Project Director

Project Title: **VA PA BLDG 6 ADMINISTRATIVE EXPANSION**
Location: **VAPAHCS, PALO ALTO CAMPUS 3801 MIRANDA AVE. PALO ALTO, CA 94304**
Date: **04.17.14** Checked: **SHG** Drawn: **Author**

Project Number: **640-13-121P**
Building Number: **6**
Drawing Number: **E601A**
Dwg. of

Office of Construction and Facilities Management
Department of Veterans Affairs

VA FORM 08-6231

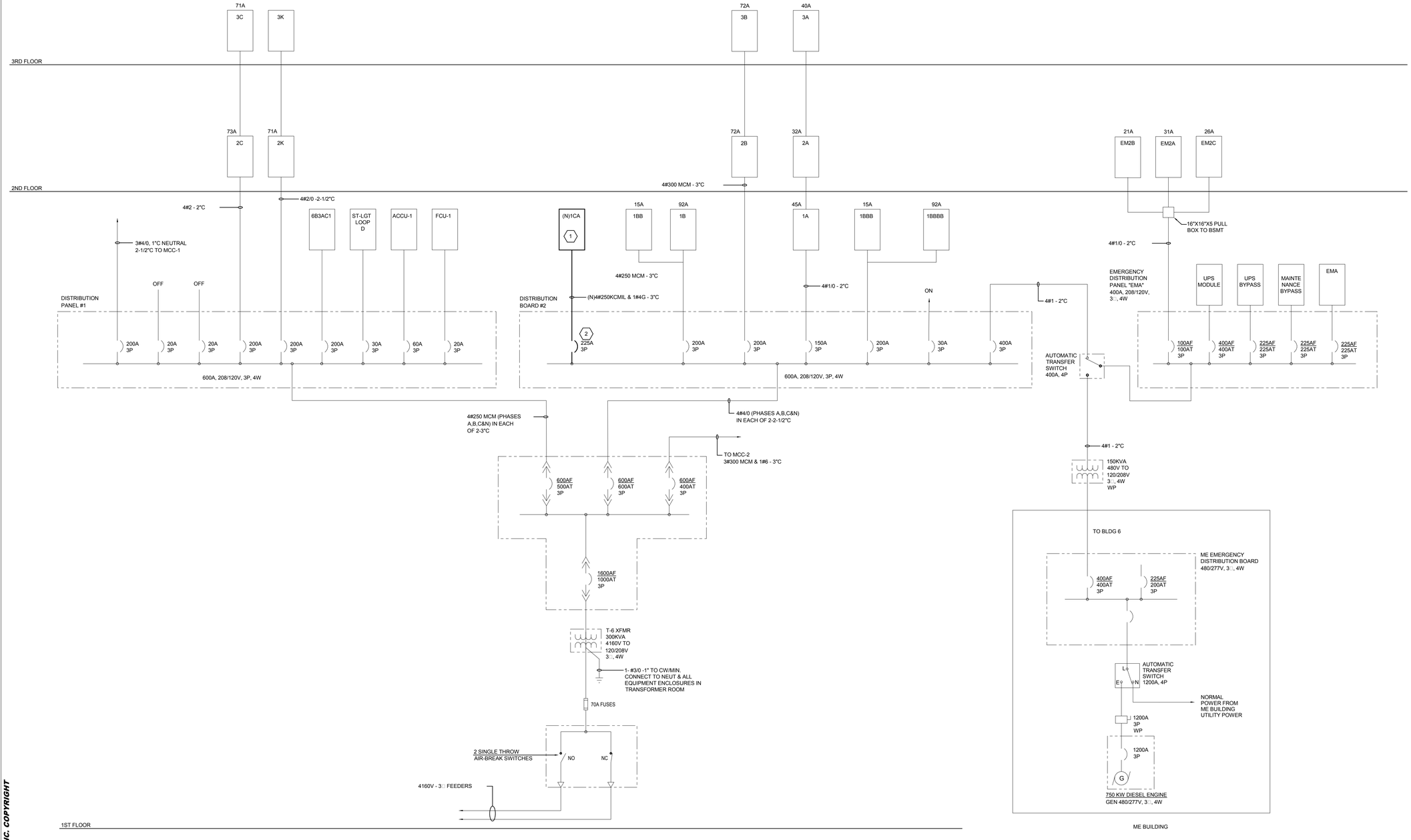

KEY NOTES:

1. NEW 225A PANEL.
2. REPLACE EXISTING BREAKER WITH NEW 225A COMPATIBLE CIRCUIT BREAKER.

SHEET NOTES:

1. ELECTRICAL EQUIPMENT SHOWN ARE EXISTING, UON.

HILLIARD ARCHITECTS INC. COPYRIGHT

FINAL BID DOCUMENTS

Revisions: | Date

CONSULTANTS:

REGISTERED PROFESSIONAL ENGINEER VICTOR G. STEFFEN No. 11872 Exp. 12/31/14 ELECTRICAL STATE OF CALIFORNIA

ARCHITECT/ENGINEERS:

ESTABLISHED 1988 HILLIARD ARCHITECTS GOING GREEN

HILLIARD ARCHITECTS, INC
251 Post Street, Suite 620
San Francisco, CA 94108-5017
Tel 415 989 6400, Fax 415 989 3056
www.HilliardArchitects.com

Drawing Title: **SINGLE LINE DIAGRAM**

Approved: Project Director

Project Title: **VA PA BLDG 6 ADMINISTRATIVE EXPANSION**

Location: **VAPAHCS, PALO ALTO CAMPUS 3801 MIRANDA AVE. PALO ALTO, CA 94304**

Date: **04.17.14** | Checked: **SHG** | Drawn: **Author**

Project Number: **640-13-121P**

Building Number: **6**

Drawing Number: **E701A**

Dwg. of

Office of Construction and Facilities Management

Department of Veterans Affairs

VA FORM 08-6231