ABBREVIATIONS

Abbreviation	Meaning
-A-	
A/E	ARCHITECT / ENGINEER
AAHX	AIR TO AIR HEAT EXCHANGER
AB	AIR BLENDER
AAV	AUTOMATIC AIR VENT
ACC	AIR COOLED CONDENSER
ACCH	AIR COOLED CHILLER
ACCU	AIR-COOLED CONDENSING UNIT
ACU	AIR CONDITIONING UNIT
ACD	AUTOMATIC CONTROL DAMPER,MODULATING
ACD-TP	AUTOMATIC CONTROL DAMPER, TWO POSITION
AD	ACCESS DOOR
AF	AFTER FILTER
AFCV	AIR FLOW CONTROL VALVE
AFF	ABOVE FINISHED FLOOR
AFMD	AIR FLOW MEASURING DEVICE
AFW	AIR FOIL WHEEL (FAN)
AHU	AIR-HANDLING UNIT
AMP	AMPERAGE
AP	ACCESS PANEL
APD	AIR PRESSURE DROP
ARI	AIR CONDITIONING AND REFRIGERATION INSTITUTE
AS	AIR SEPARATOR
ASME	AMERICAN SOCIETY OF MECHANICAL ENGINEERS
ATT	SOUND ANTTENUATOR
AW	AIR WASHER
AXF	AXIAL FLOW
-B-	
B	BOILER
BD	BUTTERFLY DAMPER
BDD	BACKDRAFT DAMPER
BDR	BASE BOARD RADIATOR
BFP	BACKFLOW PREVENTER
BFT	BOILER PLANT FIRE TUBE
BG	BOTTOM GRILLE
BHP	BRAKE HORSEPOWER
BHW	HOT WATER HEATING BOILER
BHX	BOILER BLOWDOWN HEAT EXCHANGER
BIW	BACKWARD INCLINED WHEEL (FAN)
BMT	BONE MARROW TRANSPLANT
BR	BOTTOM REGISTER
BSC	BIOLOGICAL SAFETY CABINETS
BT	BLOWOFF TANK
BTC	BLOWOFF TANK CONTROL VALVE
BTU	BRITISH THERMAL UNIT
BTUH	BRITISH THERMAL UNIT PER HOUR
BWT	BOILER PLANT WATER TUBE
-C-	
C	CENTIGRADE (CELSIUS)
CC	COOLING COIL
CCD	COOLING COIL CONDENSATE DRAIN
CD	CEILING DIFFUSER
CD-1	CONSTRUCTION DOCUMENT (SUBMISSION1)
CD-2	CONSTRUCTION DOCUMENT (SUBMISSION2)
CENT	CENTRIFUGAL
CFH	CUBIC FEET PER HOUR
CFM	CUBIC FEET PER MINUTE
CFT	CUBIC FEET
CFP	CHEMICAL FEED PUMP
CG	CEILING GRILLE
CH	CHILLER
CHP	CHILLED WATER PUMP
CHW	CHILLER WATER
CHR	CHILLED WATER RETURN
CHS	CHILLED WATER SUPPLY
CI	CAST IRON
CM	CARBON MONOXIDE
CM	CUBIC METER
CM/S	CUBIC METER PER SECOND
CO	CLEAN OUT
CO2	CARBON DIOXIDE
COMP	COMPRESSOR UNIT
COP	COEFFICIENT OF PERFORMANCE
CP	CONDENSATE PUMP
CR	CEILING REGISTER
CS	CONDENSATE STORAGE TANK
CSG	CLEAN STEAM GENERATOR
CT	COOLING TOWER
CU	CONDENSING UNIT
CUH	CABINET UNIT HEATER
CV	CONSTANT VOLUME
CW	COLD WATER (POTABLE)
CWCC	CHILLED WATER COOLING COIL
CWP	CONDENSER WATER PUMP
CWR	CONDENSER WATER RETURN (TO CT)
CWS	CONDENSER WATER SUPPLY (FROM CT)
-D-	
D	DAMPER - AUTOMATIC
D-1	OUTDOOR AIR DAMPER
D-2	RETURN AIR DAMPER
D-3	RELIEF AIR DAMPER
DB	DECIBELS
Db	DRY-BULB TEMPERATURE
DD-1	DESIGN DEVELOPMENT (SUBMISSION1)
DD-2	DESIGN DEVELOPMENT (SUBMISSION2)
DDC	DIRECT DIGITAL CONTROLS
DEG	DEGREE
DF	DIFFUSER
DIA	DIAMETER
DIW	DEIONIZED WATER
DP	DEW POINT TEMPERATURE
DP	DIFFUSER PLATE
DPA	DIFFERENTIAL PRESSURE ASSEMBLY
DPS	DIFFERENTIAL PRESSURE SENSOR
DX	DIRECT EXPANSION
DXCC	DIRECT EXPANSION COOLING COIL
-E-	
EA	EXHAUST AIR
EAT	ENTERING AIR TEMPERATURE
EC	EVAPORATIVE COOLER
ECC	ENGINEERING CONTROL CENTER
ECU	EVAPORATIVE CONDENSER UNIT
EDH	ELECTRIC DUCT HEATER
EER	ENERGY EFFICIENCY RATIO
EF	EXHAUST FAN
EG	EXHAUST GRILLE
EGS	EMERGENCY GAS SHUTOFF
EGT	ENTERING GLYCOL TEMPERATURE
EH	EXHAUST HOOD
EJ	EXPANSION JOINT
EMD	END OF MAIN DRIP (STEAM)
ENT	ENTERING
ER	EXHAUST REGISTER
ERC	ELECTRIC REHEAT COIL
ERP	ELECTRIC RADIANT PANEL
ESP	EXTERNAL STATIC PRESSURE
ET	EXPANSION TANK
ETO	ETHYLENE OXIDE
EUH	ELECTRIC UNIT HEATER
EWC	EVAPORATIVE WATER COOLER
EWT	ENTERING WATER TEMPERATURE
EX	EXISTING
-F-	
F	FAHRENHEIT
F&T	FLOAT AND THERMOSTATIC
F/SDPR	COMBINATION FIRE SMOKE DAMPER
FA	FREE AREA
FC	FLEXIBLE CONNECTION
FCU	FAN COIL UNIT (4 PIPE)
FCUC	FAN COIL UNIT COOLING ONLY
FCUH	FAN COIL UNIT HEATING ONLY
FCW	FORWARD CURVED WHEEL (FAN)
FD	FLOOR DRAIN
FD	FIRE DAMPER
FF	FINAL FILTER
FHX	FLUE GAS/FEEDWATER HEAT EXCHANGER
FM	FLOW METER
FOP	FUEL OIL PUMP
FOT	FUEL OIL TANK
FOHX	FUEL OIL HEAT EXCHANGER
FPM	FEET PER MINUTE
FPS	FEET PER SECOND
FPTU	FAN POWERED TERMINAL UNIT
FR	FLOOR REGISTER
FRP	FIBER REINFORCED POLYESTER
FS	FLOW SWITCH
FSTAT	FREEZE STAT
-G-	
GA	GAUGE
GAL	GALLONS
GH	GRAVITY HOOD
GPD	GALLONS PER DAY
GPH	GALLONS PER HOUR
GPM	GALLONS PER MINUTE
GPR	GAS PRESSURE REGULATOR
GS	GALVANIZED STEEL
-H-	
H	HUMIDIFIER
H&CW	HOT & COLD WATER
HAC	HOUSEKEEPING AID CLOSET
HB	HOSE BIBB
HC	HEATING COIL
HD	HEAD
HD	HOOD
HOA	HAND/OFF/AUTOMATIC
HP	HEAT PUMP
HP	HORSEPOWER
HPDT	HIGH PRESSURE DRIP TRAP
HPR	HIGH PRESSURE RETURN (STEAM CONDENSATE)
HPS	HIGH PRESSURE SUPPLY (STEAM)
HRC	HEAT RECOVERY COIL
HRD	HEAT RECOVERY DEVICE
HRP	HYDRONIC RADIANT (CEILING) PANEL
HRW	HEAT RECOVERY WHEEL
HSTAT	HUMIDISTAT
HTM	HUMIDIFIER TERMINAL
HUM	HUMIDIFIER UNIT MOUNTED
HVU	HEATING AND VENTILATING UNIT
HW	HOT WATER
HWC	HOT WATER COIL
HWHC	HOT WATER HEATING COIL
HWP	HEATING HOT WATER PUMP
HWR	HEATING HOT WATER RETURN
HWS	HEATING HOT WATER SUPPLY
HWUH	HOT WATER UNIT HEATER
HVD	HOISTWAY VENT DAMPER
HX	HEAT EXCHANGER
HZ	HERTZ
-I-	
II/O	INPUT/OUTPUT
IAQ	INDOOR AIR QUALITY
IBT	INVERTED BUCKET TRAP
ICF	IN-LINE CENTRIFUGAL FAN
ICU	INTENSIVE CARE UNIT
ID	INSIDE DIAMETER
IFB	INTEGRAL FACE AND BYPASS
IN	INCHES
IN HG	INCHES OF MERCURY
IN WC	INCH WATER COLUMN
IN WG	INCH WATER GAUGE
IN-LB	INCH-POUND
IPLV	INTEGRATED PART LOAD VALUE
IRH	INFRARED HEATER
IS	INSECT SCREEN
IU	INDUCTION UNIT
IV	INLET VANES
-K-	
kg	KILOGRAM
kg/HR	KILOGRAM PER HOUR
kPa	KILOPASCAL
kW	KILOWATT
kWh	KILOWATT HOUR
-L-	
L	LITER
L/h	LITERS PER HOUR (OR LITERS/HOUR)
L/m	LITERS PER MINUTE (OR LITERS/MINUTE)
L/s	LITERS PER SECOND (OR LITERS/SECOND)
LAT	LEAVING AIR TEMPERATURE
LBS/HR	POUNDS PER HOUR
LF	LINEAR FOOT (FEET)
LGT	LEAVING GLYCOL TEMPERATURE
LH	LATENT HEAT
LPG	LIQUID PROPANE GAS
LPR	LOW PRESSURE RETURN (STEAM CONDENSATE)
LPRC	LOW PRESSURE STEAM RETURN (CLEAN)
LLHX	LIQUID TO LIQUID HEAT EXCHANGER
LPS	LOW PRESSURE STEAM
LPSC	LOW PRESSURE STEAM (CLEAN)
LSD	LINEAR SLOT DIFFUSER
LTCP	LOCAL TEMPERATURE CONTROL PANEL
LVG	LEAVING
LVR	LOUVER
LWT	LEAVING WATER TEMPERATURE
-M-	
M	METER, SI UNIT
M/s	METERS PER SECOND(OR METERS/SECOND)
MA	MIXED AIR
MAT	MIXED AIR TEMPERATURE
MAU	MAKE-UP AIR UNIT
MAV	MANUAL AIR VENT
MAX	MAXIMUM
MB	MIXING BOX
MBH	1000 BTUH
MCA	MINIMUM BRANCH CIRCUIT AMPACITY
MER	MECHANICAL EQUIPMENT ROOM
MERV	MINIMUM EFFICIENCY REPORTING VALUE
MH	MANHOLE
MHP	MOTOR HORSEPOWER
MIN	MINIMUM
MM	MILLIMETER
MOC	MATERIAL OF CONSTRUCTION
MOV	MOTOR OPERATED VALVE
MPR	MEDIUM PRESSURE RETURN (STEAM CONDENSATE)
MPS	MEDIUM PRESSURE STEAM
MRI	MAGNETIC RESONANCE IMAGING
MTD	MEAN TEMPERATURE DIFFERENCE
MVD	MANUAL VOLUME DAMPER
MZ	MULTI-ZONE
-N-	
NA	NOT APPLICABLE
NC	NOISE CRITERIA
NC	NORMALLY CLOSED
NG	NATURAL GAS
NGFM	NATURAL GAS FLOWMETER
NO	NORMALLY OPEN
NOAA	NATIONAL OCEANIC & ATMOSPHERIC ADMINISTRATION
NOM	NOMINAL
NPLV	NON-STANDARD PART LOAD VALUE
NPSH	NET POSITIVE SUCTION HEAD
NTS	NOT TO SCALE
-O-	
OA	OUTSIDE AIR
OAG	OUTSIDE AIR GRILLE
OAI	OUTSIDE AIR INTAKE
OD	OUTSIDE DIAMETER
OFM	OIL FLOWMETER
OR	OPERATING ROOM
-P-	
P	PUMP
PA	PASCAL
PC	PUMPED CONDENSATE
PCF	POUNDS PER CUBIC FOOT (FEET)
PD	PRESSURE DROP
PDT	PRESSURE DIFFERENTIAL TRANSMITTOR
PEF	PROPELLER (TYPE) EXHAUST FAN
PF	PRE-FILTER
PG	PRESSURE GAGE
PGW	PROPYLENE GLYCOL-WATER (SOLUTION)
PH	PHASE
PHC	PREHEAT COIL
PPM	PARTS PER MILLION
PRS	PRESSURE REGULATING (VALVE) STATION
PRV	PRESSURE REGULATING VALVE
PSI	POUNDS PER SQUARE INCH
PSIA	POUNDS PER SQUARE INCH – ABSOLUTE
PSIG	POUNDS PER SQUARE INCH – GAGE
PSS	PRIMARY SECONDARY SYSTEM
PSV	PRESSURE SAFETY VALVE
PTAC	PACKAGED TERMINAL AIR CONDITIONER
-R-	
R/E	RETURN OR EXHAUST
RA	RETURN AIR
RAD	REFRIGERANT AIR DRYER
RAF	RADIO FREQUENCY
RAHX	ROTARY AIR HEAT EXCHANGER
RAT	RETURN AIR TEMPERATURE
RCCH	REMOTE CONDENSER CHILLER
RCU	RECIPROCATING CHILLER UNIT
RD	REFRIGERANT DISCHARGE
RDS	ROOM DATA SHEETS
REA	RELIEF AIR
RF	RETURN FAN
RG	RETURN GRILLE
RH	RELATIVE HUMIDITY
RHC	REHEAT COIL
RHG	REFRIGERANT HOT GAS
RL	REFRIGERANT LIQUID LINE
RLA	RUN LOAD AMPERE
RO	REVERSE OSMOSIS
RPM	REVOLUTIONS PER MINUTE
RR	RETURN REGISTER
RS	REFRIGERANT SUCTION
RTU	ROOF TOP UNIT
RV	RELIEF VALVE
-S-	
SA	SUPPLY AIR
SAD	SOUND ATTENUATING DEVICE
SAT	SUPPLY AIR TEMPERATURE
SC	SHADING COEFFICIENT
SCFM	STANDARD CUBIC FEET PER MINUTE
SCI	SPINAL CODE INJURY
SCR	SILICON CONTROLLED RECTIFIER
SD	SMOKE DETECTOR
SD	SUPPLY AIR DIFFUSER
SD-1	SCHEMATIC DESIGN (SUBMISSION1)
SD-2	SCHEMATIC DESIGN (SUBMISSION2)
SDPR	SMOKE DAMPER
SDR	SMOKE DAMPER (RETURN)
SDS	SMOKE DAMPER (SUPPLY)
SEN	SENSIBLE HEAT
SF	SUPPLY FAN
SG	SUPPLY AIR GRILLE
SH	STEAM HUMIDIFIER
SHC	STEAM HEATING COIL
SI	SQUARE INCHES
SP	STATIC PRESSURE
SP GR	SPECIFIC GRAVITY
SPD	SUPPLY PROCESS AND DISTRIBUTION
SPRV	STEAM PRESSURE REDUCING VALVE
SPS	STATIC PRESSURE SENSOR
SQ FT	SQUARE FOOT (FEET)
SR	SUPPLY AIR REGISTER
SS	STAINLESS STEEL
SSHX	STEAM TO STEAM HEAT EXCHANGER
SSR	SOLID SEPARATOR
ST	STEAM TRAP
SUH	STEAM UNIT HEATER
SV	STEAM PRESSURE REDUCING VALVE
SVS	STEAM VENT SILENCER
SWHX	STEAM TO WATER HEAT EXCHANGER
-T-	
T&PCV	TEMPERATURE AND PRESSURE CONTROL VALVE
TAB	TESTING, ADJUSTING, BALANCE
TD	TEMPERATURE DIFFERENCE
TDH	TOTAL DYNAMIC HEAD
TDS	TOTAL DISSOLVED SOLIDS
TEMP	TEMPERATURE
TG	TRANSFER GRILLE
TP	TRAP
TR	TOP REGISTER
TSP	TOTAL STATIC PRESSURE
TSTAT	THERMOSTAT
TU	TERMINAL UNIT
TWU	THRU-WALL UNIT
-U-	
UC	UNDER CUT
UC	UNIT COOLER
UH	UNIT HEATER
UL	UNDERWRITERS LABORATORY
UON	UNLESS OTHERWISE NOTED
URV	UPBLAST UNIT VENTILATOR
-V-	
V	VALVE
VAF	VANE-AXIAL FAN
VAV	VARIABLE AIR VOLUME
VD	VOLUME DAMPER
VFD	VARIABLE FREQUENCY DRIVE
VHA	VETERANS HEALTH ADMINISTRATION
VI	VIBRATION ISOLATOR
VIV	VARIABLE INLET VANES
VP	VACUUM PUMP
VPS	VARIABLE PRIMARY SYSTEM
VR	VACUUM (STEAM CONDENSATE) RETURN
VSD	VARIABLE SPEED DRIVE
VTR	VENT THRU ROOF
VUH	VERTICAL UNIT HEATER
-W-	
W	WATTS
WAG	WASTE ANESTHESIA GAS
Wb	WET-BULB (TEMPERATURE)
WC	WATER COOLED
WCCH	WATER COOLED CHILLER
WCCU	WATER COOLED CONDENSING UNIT
WCHP	WATER COOLED HEAT PUMPS
WCPU	WATER COOLED PACKAGED UNIT
WEF	WALL EXHAUST FAN
WF	WATER FILTER
WFCV	WATER FLOW CONTROL VALVE
WFM	WATER FLOWMETER
WFMD	WATER FLOW MEASURING DEVICE
WG	WATER GAGE
WPD	WATER SIDE PRESSURE DROP
-Y-	
YR	YEAR

SYMBOLS (AS APPLICABLE)

GENERAL NOTES

1. THE FIRST FIGURE OF DUCT SIZE INDICATES DIMENSION OF FACE SHOWN OR INDICATED. DUCT SIZES ARE NET INSIDE DIMENSIONS.
2. ACCESS PANELS IN HARD SUSPENDED CEILINGS ARE REQUIRED FOR ALL VALVES, TRAPS, DAMPERS, CLEANOUTS, CONTROLS, ETC. ACCESS PANELS SHALL BE FURNISHED AND INSTALLED UNDER THE ARCHITECTURAL SPECIFICATIONS.
3. TOTAL EXTERNAL STATIC PRESSURE NOTED IN THE MECHANICAL SCHEDULE INCLUDES DUCT SYSTEM, TERMINAL UNITS, REHEAT COILS, AIR TERMINALS ETC.
4. FOR TYPICAL STEAM AND WATER PIPING CONNECTIONS TO EQUIPMENT, SEE STANDARD EQUIPMENT DETAILS.
5. DIFFUSER, REGISTER AND GRILLE SIZES SHOWN ON FLOOR PLANS ARE NECK SIZES.
6. WATER PIPE CONNECTIONS TO AIR HEATING AND COOLING COILS SHALL BE MADE TO PROVIDE COUNTER FLOW BETWEEN WATER AND AIR.
7. WALL TYPE REGISTERS OR GRILLES ARE TO BE LOCATED WITH BOTTOM OF REGISTER OR GRILLE AT AN ELEVATION ABOVE FINISHED FLOOR AS INDICATED ON DRAWINGS. HOWEVER IT SHALL BE COTRACTOR'S RESPONSIBILITY TO COORDINATE THE FINAL ELEVATIONS OF THE REGISTERS OR GRILLES ON THE WALL TO AVOID CONFLICTS WITH OTHER BUILDING SERVICES.
8. REFER TO ARCHITECTURAL REFLECTED CEILING PLANS FOR EXACT LOCATIONS OF CEILING DIFFUSERS, REGISTERS, AND GRILLES.
9. SEISMIC PROVISIONS REQUIRED - SEE SPECS.
10. ALL PRESSURES LISTED ARE GAGE PRESSURE UNLESS OTHERWISE NOTED
11. ALL DUCTWORK, INSULATION, EQUIPMENT AND INSTALLATION SHALL CONFORM, AS A MINIMUM, ALL APPLICABLE CODES AND GOVERNING AUTHORITIES HAVING JURISDICTION.
12. ALL DUCTWORK, INSULATION AND INSTALLATION SHALL CONFIRM, AS MINIMUM TO VA SPECIFICATIONS, STANDARDS, GUIDELINES AND SMACNA STANDARDS.
13. PROVIDE VOLUME DAMPERS IN EACH SUPPLY AIR BRANCH DUCT TO THE OUTLETS, AS FAR AWAY FROM AIR OUTLET AS POSSIBLE, AND ALL OTHER LOCATIONS AS INDICATED. INSTALL PREFERABLY AT THE BRANCH TAKEOFF.
14. CONTRACTOR SHALL OBTAIN AND FOLLOW ALL VA REQUIREMENTS, GUIDELINES, RULES AND PROCEDURES FOR CONSTRUCTION. CONTRACTOR SHALL PROVIDE INSURANCE IN ACCORDANCE WITH THE BUILDING'S CERTIFICATE OF INSURANCE REQUIREMENTS.
15. WHERE CONNECTING FLEXIBLE DUCTWORK TO CEILING DIFFUSERS AND CEILING REGISTERS, SIZE OF BRANCH & FLEXIBLE DUCT SHALL BE SAME SIZE AS NECK OF CEILING DIFFUSER OR CEILING REGISTER. MAXIMUM LENGTH TO BE 5'-0" LONG.
16. ROOM THERMOSTATS SHALL BE CENTERED BESIDE THE LIGHT SWITCHES UNLESS OTHERWISE NOTED. CONTRACTOR TO VERIFY EXACT LOCATIONS WITH ARCHITECT. MOUNT THERMOSTATS AT 48" ABOVE THE FLOOR. THERMOSTAT AS PER VA STANDARD.
17. ON NEW FLOOR PLANS, LIGHT DASHED/HIDDEN LINE INDICATE EXISTING SERVICES AND HEAVY SOLID LINE INDICATE NEW MECHANICAL WORK. INTERSECTION OF EXISTING AND NEW WORK LINES INDICATE POINT OF CONNECTION. ON DEMOLITION PLANS HEAVY DASHED/HIDDEN LINE INDICATE MECHANICAL DEMOLITION WORK. INTERSECTION OF EXISTING AND DEMOLITION WORK LINES INDICATE POINT OF DEMOLITION.
18. RUN ALL DUCTS AS TIGHT AS POSSIBLE TO BOTTOM OF STRUCTURE, UNLESS OTHERWISE NOTED. DUCT DIMENSIONS SHOWN ARE NET INSIDE DIMENSIONS. ALL PIPE SIZES SHOWN ARE NOMINAL PIPE DIAMETERS.
19. CONTRACTOR SHALL COORDINATE VOLTAGE AND PHASE OF EACH PIECE OF EQUIPMENT W/THE ELECTRICAL CONTRACTOR PRIOR TO ORDERING.
20. CALIBRATE AND SET ALL THERMOSTATS SET POINTS TO 75°F FOR COOLING AND 70°F FOR HEATING. THERMOSTATS ARE REVERSE ACTING. COORDINATE WITH FAN COIL UNIT AND ASSOCIATED CONTROL VALVE ACTUATORS. CONTROL SHALL BE ADJUSTABLE TO PROVIDE A RANGE UP TO 5°F BETWEEN FULL HEATING AND FULL COOLING, AND THE CAPABILITY OF TERMINATING ALL HEATING AT A TEMPERATURE OF NO MORE THAN 70°F, AND COOLING AT A TEMPERATURE NOT LESS THAN 70°F.
21. ENTIRE INSTALLATION SHALL COMPLY WITH ALL GOVERNING CODES AND REGULATIONS. CONTRACTOR SHALL OBTAIN AND PAY FOR ALL NECESSARY PERMITS, FEES AND LICENSES.
22. CONTRACTOR SHALL PROVIDE WRITTEN WARRANTY TO REPLACE ALL FAULTY MATERIALS AND/OR LABOR, AT NO COST TO OWNER, FOR A PERIOD OF ONE YEAR FROM THE DATE OF THE OWNER ACCEPTANCE.
23. CONTRACTOR SHALL PROVIDE EQUIPMENT/MATERIAL SUBMITTALS WITH DESCRIPTIVE DATA FOR ALL PRODUCTS AND MATERIALS WITH SHOP DRAWINGS AT ¼" SCALE INCLUDED IN THE SUBMITTALS.
24. UNLESS SPECIFICALLY INDICATED/INSTRUCTED, ALL EXISTING ABANDONED EQUIPMENTWHICH IS NOT IN USE SHALL BE DISPOSED OFF BY THE CONTRACTOR AND ALL ASSOCIATED COST SHALL BE PROVIDED IN THE BID.
25. UNLESS SPECIFICALLY INDICATED/INSTRUCTED, CONTRACTOR SHALL OBTAIN AND PAY FOR ALL PERMITS, LICENSES, AND FEES REQUIRED FOR ENTIRE MECHANICAL INSTALLATION THAT IS IN THE SCPOE OF THIS PROJECT. CONTRACTOR SHALL FURNISH FINAL CERTIFICATE OF INSPECTION OR WRITTEN EVIDENCE OF ACCEPTANCE BY VA INSPECTION AUTHORITIES FOR ALL WORK INSTALLED.
26. IF ANY EQUIPMENT SUBMITTED BY THE CONTRACTOR IS DIFFERENT FROM THAT IS SPECIFIED OR REQUIRES CHANGES IN MATERIAL/LABOR FORM THAT IS REQUIRED PER CONTRACT DOCUMENTS AND THAT IS AFFECTING THIS AND OTHER TRADES, SUCH CHANGES SHALL BE SUBMITTED AS A SHOP DRAWING FOR OWNER'S/ENGINEER'S REVIEW. SUBMITTALS SHALL INDICATE ANY CREDIT DUE TO OWNERS BECAUSE OF SUCH CHJANGES. CONTRACTOR SHALL ALSO BE RESPONSIBLE FOR PAYMENT OF ALL CHARGES RESULTING FROM ADDITIONS OR CHANGES IN THE WORK OF OTHER TRADES NECESSARY TO ACCOMMODATE THE REQUESTED MODIFICATION BY THIS CONTRACTOR. ALL CHANGES SHALL BE INCORPORATED IN THE DRAWINGS WHEN SUBMITTED AS AS-BUILT DRWAINGS FOR RECORDS AS PART OF PROJECT CLOSE-OUT DOCUEMNTATION.
27. THESE DRAWINGS INDICATED THE FINISHED REQUIREMENTS OF THE MECHANICAL SYSTEM. THE CONTRACTOR MAY DESIRE TO INSTALL THE SPECIFIED WORK IN A MANNER DIFFERENT FROM THAT IS SHOWN THE CONTRACT DOCUMENTS DUE TO EXISTING STRUCTURAL CONDITIONS OR TO AVOID CONFLICTS BETWEEN THE NEW OR EXISTING BUILDING SERVICES OR FOR OTHER REASONS. CONTRACTOR MAY PRESENT ALL SUCH CHANGES AS A SUBMITTAL FOR OWNER'S/ENGINEER'S REVIEW/APPROVAL BEFORE PROCEEDING WITH SUCH CHANGES. ALL CHANGES SHALL BE INCORPORATED IN THE DRAWINGS WHEN SUBMITTED AS AS-BUILT DRWAINGS FOR RECORDS AS PART OF PROJECT CLOSE-OUT DOCUEMNTATION.
28. ALL SYMBOLS SHOWN ON SYMBOL LIST ARE NOT NECESSARILY USED ON THIS PROJECT.
29. CONTRACTOR SHALL COORDINATE ALL MECHANICAL WORK WITH BUILDING STRCURE AND ARCHITECTURAL ELEMNTS TO AVOID ANY CONFLICTS AND SHALL OBTAIN NECESSARY APPROVALS FROM OWNERS/STRUCTURAL ENGINEER/ARCHITECT FOR ALL PENETRATIONS THROUGH WALL/FLOOR/ROOF THAT ARE REQUIRED FOR MECHANICAL WORK.
30. AIR MOVING SYSTEMS SUPPLYING AIR IN EXCESS OF 2000 CFM'S SHALL BE EQUIPPED WITH A AUTOMATIC SHUTOFF. AUTOMATIC SHUTOFFS SHALL BE ACCOMPLISHED BY INTERRUPTING THE POWER SOURCE OF AIR-MOVING EQUIPMENT UPON DETECTION OF SMOKE IN THE MAIN SUPPLY-AIR DUCT.
31. CONTRACTOR SHALL PROVIDE TO THE GOVERNMENT UPON REQUEST MATERIAL SAFETY DATA SHEETS (MSD'S) PRIOR TO INSTALLATION OR USE OF ADHESIVES, INSULATION, SEALANTS, ETC.
32. PLANS SHALL COMPLY WITH THE 2010 INTERNATIONAL MECHANICAL CODE AND PLUMBING CODE, ASHRAE 170-2008 AND FGI-2010.
33. ALL MSD'S SHALL COMPLY WITH THE OCCUPATIONAL SAFETY & HEALTH ADMINISTRATION (OSHA) REQUIREMENTS.
34. CONTRACTOR SHALL PROVIDE RECYCLING OF ITEMS FOR DEMOLITION AND/OR CONSTRUCTION SUBJECT TO ECONOMIC EVALUATION, INCLUDING, BUT NOT LIMITED TO THE FOLLOWING: DUCTWORK & HVAC EQUIPMENT, WIRING & ELECTRICAL EQUIPMENT, INSULATION, ETC.
35. ALL WASTE AND/OR DEMOLISHED MATERIALS FOUND TO CONTAIN LEAD, ASBESTOS OR POLY- CHLORINATED BIPHENYLS (PCB'S) OR OTHER HARMFUL SUBSTANCES SHALL BE HANDLED AND REMOVED IN ACCORDANCE WITH FEDERAL AND STATE LAW FOR
36. ALL INSULATION PRODUCTS FOR HVAC SHALL CONTAIN RECOVERED MATERIALS AS REQUIRED BY THE EPA'S CPG AND RELATED RECYCLED CONTENT RECOMMENDATION.
37. NO INSULATION INSTALLED FOR THE PROJECT SHALL BE OF MATERIAL MANUFACTURED USING CHLOROFLUOROCARBONS (CFC'S),NOR SHALL CFC'S BE USED IN THE INSTALLATION OF THE PRODUCT.
38. ALL INSULATING MATERIALS SHALL HAVE PROPERTIES THAT EXCEED OR MEET APPLICABLE INDUSTRY STANDARDS. POLYSTYRENE PRODUCTS SHALL MEET ASTM C578-91.
39. CONTRACTOR SHALL SURVEY THE SPACE FOR EXISTING CONDITIONS AND ALLOW FOR 20% CONTINGENCY BASED ON UNFORESEEN CONDITIONS.

SHEET INDEX

M001	SYMBOLS, NOTES AND ABBREVIATIONS	NONE
M002	MECHANICAL SCHEDULES	NONE
M003	MECHANICAL SCHEDULES	NONE
M004	MECHANICAL SCHEDULES	NONE
M005	MECHANICAL SCHEDULES	NONE
MD101	MECHANICAL DEMOLITION 1ST FLOOR PLAN	1/8"=1'-0"
MD101.1	MECHANICAL DEMOLITION 1ST FLOOR ENLARGED PLAN	1/8"=1'-0"
MD102	MECHANICAL DEMOLITION 2ND FLOOR PLAN	1/8"=1'-0"
MD103	MECHANICAL DEMOLITION ROOF PLAN	1/8"=1'-0"
M101	MECHANICAL HVAC 1ST FLOOR PLAN	1/8"=1'-0"
M102	MECHANICAL HVAC 2ND FLOOR PLAN	1/8"=1'-0"
M103	MECHANICAL HVAC ROOF PLAN	1/8"=1'-0"
MP101	MECHANICAL PIPING 1ST FLOOR PLAN	1/8"=1'-0"
MP102	MECHANICAL PIPING 2ND FLOOR PLAN	1/8"=1'-0"
M401	MECHANICAL 1ST FLOOR ZONE PLAN	1/8"=1'-0"
M402	MECHANICAL 2ND FLOOR ZONE PLAN	1/8"=1'-0"
M403	MECHANICAL SECTIONS	1/4"=1'-0"
M404	MECHANICAL SECTIONS	1/4"=1'-0"
M405	MECHANICAL SECTIONS	1/4"=1'-0"
M501	MECHANICAL DETAILS	NONE
M502	MECHANICAL DETAILS	NONE
M503	MECHANICAL DETAILS	NONE
M504	MECHANICAL DETAILS	NONE
M505	MECHANICAL DETAILS	NONE
M506	MECHANICAL DETAILS	NONE
M507	MECHANICAL DETAILS	NONE
M601	MECHANICAL SCHEMATIC DIAGRAMS	NONE
M602	MECHANICAL SCHEMATIC DIAGRAMS	NONE
M603	MECHANICAL SCHEMATIC DIAGRAMS	NONE
M604	MECHANICAL SCHEMATIC DIAGRAMS	NONE
C701	MECHANICAL CONTROL DIAGRAMS	NONE
C702	MECHANICAL CONTROL DIAGRAMS	NONE
C703	MECHANICAL CONTROL DIAGRAMS	NONE
C704	MECHANICAL CONTROL DIAGRAMS	NONE
C705	MECHANICAL CONTROL DIAGRAMS	NONE

FINAL BID DOCUMENTS

HILLIARD ARCHITECTS INC. COPYRIGHT

Revisions: Date

CONSULTANTS:

SYSKA HENNESSY GROUP
A member company of SH Group, Inc.
Syska Hennessy Group, Inc.
425 California Street
Suite 700
San Francisco, CA 94104
Tel: 415.288.9060
Fax: 415.835.0385
www.syska.com

REGISTERED PROFESSIONAL ENGINEER – PRASAD V. MORE – No. M35846 – Exp.Mar.31,2014 – MECHANICAL – STATE OF CALIFORNIA

ARCHITECT/ENGINEERS:

HILLIARD ARCHITECTS – ESTABLISHED 1988 – GOING GREEN
HILLIARD ARCHITECTS, INC
251 Post Street, Suite 620
San Francisco, CA 94108-5017
Tel 415 989 6400, Fax 415 989 3056
www.HilliardArchitects.com

Drawing Title	**SYMBOLS, NOTES AND ABBREVIATIONS**
Approved: Project Director	
Project Title	**VA PA BLDG 6 LAB RENOVATION**
Location	VAPAHCS, PALO ALTO CAMPUS, 3801 MIRANDA AVE. PALO ALTO, CA 94304
Date	04.17.2014
Checked	PM
Drawn	JP
Project Number	640-13-121P
Building Number	6
Drawing Number	M001
Dwg. of	

Office of Construction and Facilities Management

Department of Veterans Affairs

VA FORM 08-6231

AIR HANDLING UNIT SCHEDULE

UNIT MARK		6-AHU-1A	6-AHU-1B	6-AHU-1C	6-AHU-2A	6-AHU-2B
	MANUFACTURER	TEMTROL	TEMTROL	TEMTROL	TEMTROL	TEMTROL
	MODEL	CUSTOM UNIT WITH STEEL BASE RAIL	CUSTOM UNIT WITH STEEL BASE RAIL	CUSTOM UNIT WITH STEEL BASE RAIL	CUSTOM UNIT WITH STEEL BASE RAIL	CUSTOM UNIT WITH STEEL BASE RAIL
	SIZE (LxWxH) (INCHES)	118 x 70 x 90	96 x 31 x 90	268 x 62 x 48	156 x 73 x 90	238 x 73 x 64
SUPPLY FAN:						
	FAN POSITION	STACKED - TOP DISCHARGE	STACKED - TOP DISCHARGE	HORIZONTAL SIDE DISCHARGE	STACKED - TOP DISCHARGE	HORIZONTAL - END DISCHARGE
	SUPPLY AIR FLOW CFM (DESIGN PEAK)	4700.0	500.0	3860.0	7100.0	8800.0
	MIN. OA CFM (DESIGN PEAK)	4700.0	260.0	1020.0	7100.0	8800.0
	ESP AT DESIGN PEAK (EXCLUDES FILTER LOADING)	2.0	1.5	1.75	2.0	2.0
	NUMBER OF FANS (WORKING + STANDBY)	1 + 1	1.0	1.0	3 + 1	3 + 1
	FAN SPEED / MOTOR SPEED (RPM)	2842 / 1740	3834 / 3450	3700 / 3475	3759 / 3500	3643 / 3475
	FAN MOTOR (HP)	5.5	1.0	4.0	3.0	4.0
	MOTOR POWER SUPPLY - (VOLTS/Ph/Hz)	460/3/60	460/3/60	460/3/60	460/3/60	460/3/60
	MOTOR TYPE	ODP - NEMA PREMIUM EFF.	ODP - NEMA PREMIUM EFF.	ODP - NEMA PREMIUM EFF.	ODP - NEMA PREMIUM EFF.	ODP - NEMA PREMIUM EFF.
RETURN FAN						
	CFM (NORMAL OPERATION)	NA	NA	3860.0	NA	NA
	ESP AT DESIGN (IN WC)	NA	NA	0.7	NA	NA
	NUMBER OF FANS	NA	NA	1.0	NA	NA
	FAN SPEED / MOTOR SPEED (RPM)	NA	NA	4014 / 3490	NA	NA
	FAN MOTOR (HP)	NA	NA	5.0	NA	NA
	MOTOR POWER SUPPLY - (VOLTS/Ph/Hz)	NA	NA	460/3/60	NA	NA
	MOTOR TYPE	NA	NA	ODP - NEMA PREMIUM EFF.	NA	NA
HEATING COIL:						
	COIL POSITION	PREHEAT	PREHEAT	PREHEAT	PREHEAT	PREHEAT
	CFM (DESIGN)	4700.0	410.0	2000.0	7100.0	8800.0
	FACE VELOCITY (MAX FPM)	600.0	600.0	600.0	600.0	600.0
	AREA (MINIMUM SQ FT)	9.6	1.6	6.7	14.30	17.80
	ROWS (MINIMUM)	2.0	2.0	2.0	2.0	2.00
	FINS PER INCH (MINIMUM)	6.0	6.0	7.0	6.0	6.0
	EAT / LAT °F (DB)	35.7 / 53.9	35.7 / 53.9	35.7 / 53.9	35.7 / 53.9	35.7 / 53.9
	PDa ("WC) MAXIMUM	0.120	0.040	0.060	0.120	0.1
	EWT °F	180.0	180.0	180.0	180.0	180.0
	GPM	18.20	2.23	14.9	26.00	32.04
	PDw (FT) MAXIMUM	2.5	2.56	3.6	5.26	3.62
	MBH TOTAL	181.82	29.5	156.8	389.70	473.90
COOLING COIL:						
	CFM (DESIGN)	4700.0	500.0	3860.0	7100.0	8800.0
	FACE VELOCITY (MAX FPM)	500.0	500.0	500.0	500.0	500.0
	AREA (MINIMUM SQ FT)	9.6	1.60	8.10	14.30	17.80
	ROWS (MINIMUM)	6.0	4.00	4.00	6.00	8.00
	FINS PER INCH (MINIMUM)	12.0	8.00	12.00	11.00	12.00
	EAT °F (DB / WB)	89.2 / 69.5	77.3 / 61.4	79.4 / 60.4	89.2 / 69.5	89.2 / 69.5
	LAT °F (DB / WB)	53.9 / 52.0	53.9 / 51.3	53.9 / 51.2	53.9 / 51.7	53.9 / 51.7
	PDa ("WC) MAXIMUM	0.94	0.18	0.49	0.87	1.27
	EWT / LWT °F	42.00	42.00	42.00	42.00	42.00
	GPM (MAXIMUM)	37.10	2.04	16.53	55.14	68.14
	PDw (FT) MAXIMUM	8.92	5.74	2.23	8.22	7.94
	MBH TOTAL	260.0	13.6	103.0	372.0	445.0
	MBH SENSIBLE	185.0	12.4	85.0	261.0	373.0
FILTERS:						
	MAXIMUM FILTER FACE VELOCITY	500.0	500.0	500.0	500.0	500.0
	PREFILTERS / FINAL FILTERS	MERV 8 / MERV13	MERV 8 / MERV13	MERV 8 / MERV13	MERV 8 / MERV13	MERV 8 / MERV13
	MAX. PD @ 500 FPM ("WG) - PREFILTERS / FINAL FILTERS	0.690	0.391	0.640	0.678	0.626
STEAM HUMIDIFIER:						
	TYPE	STEAM	NA	NA	STEAM	STEAM
	POSITION	AFTER COOILING COIL	NA	NA	AFTER COOILING COIL	AFTER COOLING COIL
	MAXIMUM ABSORPTION DISTANCE (INCHES)	18.0	NA	NA	18.0	18.0
	EAT °F (DB)	55.0	NA	NA	55.0	55.0
	EA %RH	20.0	NA	NA	20.0	20.0
	EAT GRAINS / LB OF DRY AIR	12.8	NA	NA	12.8	12.8
	LAT °F (DB)	55.0	NA	NA	55.0	55.0
	LA %RH	90.0	NA	NA	90.0	90.0
	POUNDS/HOUR REQUIRED DESIGN CAPACITY	162.0	NA	NA	254.1	313.4
	MAXIMUM AIRSIDE PRESSURE DROP (INCHES OF H2O)	0.05	NA	NA	0.05	0.05
	HUMIDIFIER STEAM FLOWPRESSURE (PSIG)	15.0	NA	NA	15.0	15.0
ACCESSORIES						
	SUPPLY AIR FLOW MEASURING STATIONS:	YES	YES	YES	YES	YES
	MAGNEHELIC GAUGE AT EACH FILTER TYPE	YES	YES	YES	YES	YES
	ECONOMIZER/MIXING BOX SECTION	NO	YES	YES	NO	NO
	OA INLET LOCATION	END HORIZONTAL	TOP VERTICAL	SIDE HORIZONTAL	TOP	SIDE HORIZONTAL
	EA / RELIEF OUTLET LOCATION	NA	NA	END HORIZONTAL	NA	NA
	RA INLET LOCATION	NA	END	SIDE HORIZONTAL	NA	NA
	OA INTAKE HOOD/LOUVER	NA	NA	YES	YES	YES
	SA OUTLET LOCATION	TOP VERTICAL	TOP VERTICAL	SIDE HORIZONTAL	TOP VERTICAL	SIDE HORIZONTAL
	VARIABLE FREQUENCY DRIVES WITH BYPASS & DISCONNECT	YES	YES	YES	YES	YES
	UNIT LOCATION (INDOOR/OUTDOOR)	INDOOR	INDOOR	OUTDOOR ROOF MOUNTED	OUTDOOR MOUNTED ON GRADE LEVEL	OUTDOOR ROOF MOUNTED
	INTERNAL SHEET METAL LINER (SOLID/PERF/NONE)	PERFORATED	PERFORATED	PERFORATED	PERFORATED	PERFORATED
	COIL & MOTOR HAND	SEE PLAN	SEE PLAN	SEE PLAN	SEE PLAN	SEE PLAN
	AUTO ISOLATION DAMPER ON OA INTAKE	YES	YES	YES	YES	YES
	VAV SA TEMPERATURE CONTROL (FIELD BY CONTROL CONTR)	YES	YES	YES	YES	YES
	LIGHTS IN EACH SECTION	YES	YES	YES	YES	YES
REMARKS		SEE NOTES 1, 2	SEE NOTES 1, 3	SEE NOTES 1, 2	SEE NOTES 1, 2	SEE NOTES 1, 2
OPTG. WEIGHT (LBS.):		2500.0	1050.0	5545.0	3200.0	6600.0
AREA SERVED:		FIRST FLOOR OPEN LAB	FIRST FLOOR ADMIN. OFFICES	FIRST FLOOR ADMIN OFFICES	SECOND FLOOR OPEN LABS	SECOND FLOOR LABS
NOTES:						
1	**PROVIDE UNIT WITH FACTORY MOUNTED STEAM HUMIDIFIER AS MANUFACTURED BY DRI-STEEM, MODEL - ULTRASORB WITH INSULATED DISPERSION TUBES .**					
2	**PROVIDE WITH SUPPLY AIR DUCT MOUNTED SMOKE DETECTOR FOR AUTO UNIT SHUT OFF.**					
3	**ALL CONTROL DAMPERS SHALL BE UTRA LOW LEAKAGE OPPOSED BLADE TYPE.**					
4	**PROVIDE UNIT WITH SEPARATE MINIMUM OA INTAKE CONTROL DAMPER AND ECONOMIZER CONTROL DAMPER.**					

AIR COOLED CHILLER SCHEDULE

UNIT MARK		6-ACCH-1
	TYPE	MODULAR
	MANUFACTURER	MULTISTACK
	MODEL	CGAM 100
	SIZE LENGTH x WIDTH x HEIGHT (INCHES)	270 x 96 x 94.5
	NORMAL ACTUAL CAPACITY (TONS)	107.8
	AMBIENT TEMPERATURE	92.3
	EER (100% - 25% Load)	9.9 - 16.5
	NO OF REFRIGERATION MODULES	5
	CAPACITY STEPS PER MODULE	2
	NO. OF MODULES OPERATING NORMALLY	4
	MODULE REDUNDNACY (WORKING + STANDBY)	4 + 1
EVAPORATOR		
	EVAPORATOR FLUID	WATER
	EWT (F)	54
	LWT (F)	42
	FLUID FLOW RATE (GPM)	216
	WPD (FT H2O)	6.71
	MINIMUM FLUID FLOW RATE (GPM)	144
	PRESSURE DROP AT MIN. FLOW (FT H2O)	7.5
	MAXIMUM FLUID FLOW RATE (GPM)	216
	PRESSURE DROP AT MAX. FLOW (FT H2O)	6.71
	FOULING FACTOR	0.00010
	REFRIGERANT TYPE	R-410A
PUMP PACKAGE INFORMATION		
	PUMP TYPE	END SUCTION OR INLINE
	NO. OF PUMPS (WORKING + STANDBY)	1 + 1
	AVAILABLE EXTERNAL HEAD PRESSURE (FT OF H2O)	47
	PUMP SIZE	10 HP
	PUMP NOMINAL FLA (A)	14
	EXPANSION TANK VOLUME (GALLONS)	NA
	PUMP FLOW CONTROL	VARIABLE SPEED DRIVE
ELECTRICAL		
	MINIMUM CIRCUIT AMPS (MCA)	336
	MAXIMUM OVER CURRENT PROTECTION (MOCP)	400
	POWER	460-3-60
OPERATING WEIGHT (LBS)		14,570
REMARKS		SEE NOTES 1, 2, 3, 4, 5, 6
NOTES:		

1. PROVIDE HIGH EFFICIENCY MODULAR CHILLER WITH FACTORY MOUNTED DISCONNECT FOR SINGLE POINT POWER CONNECTION.
2. PROVIDE SKID MOUNTED CHILER PACKAGE WITH PUMP MODULE, VARIABLE FREQUENCY DRIVES AND CHILLER CONTROL PANEL.
3. PUMP MODULE SHALL INCLUDE PUMPS, INSULATED EXPANSION TANK WITH INTER CONNECTED PIPING.
4. PROVIDE CHIILER WITH FACTORY PROVIDED FRM CONTROLS PACKAGE, ASSOCIATED CONTROLS, VALVES AND BMS INTERFACE MODULE.
5. PROVIDE FACTORY MOUNTED FREEZE PROTECTION.
6. PROVIDE CHILLER WITH SOUND ATTENUATION PACKAGE. SEE MECHANICAL DETAIL FOR MOUNTING.

LABORATORY FUME EXHAUST FAN SCHEDULE

TAG	MANUFACTURER	MODEL	LOCATION	SERVICE	FAN DATA					MOTOR DATA		POWER	SOUND DATA dba AT 5 FT.		OPER WEIGHT	REMARKS
					MAX. CFM	MIN. CFM	TYPE	ESP (IN OF H2O)	RPM	HP / AMPS	DRIVE	V/PH/HZ	INLET	OUTLET	LBS	
6-FHEF-1	GREENHECK	VEKTOR-CD-24-1-II-LV	ROOF	LAB EXHAUST	14,280	7,270	LAB FUME EXHAUST	2.7	2079	20 HP	BELT	460/60/3	87	91	3600	NOTES 1 THROUGH 6
6-FHEF-2	GREENHECK	VEKTOR-CD-24-1-II-LV	ROOF	LAB EXHAUST	13,020	6,950	LAB FUME EXHAUST	1.75	1869	15 HP	BELT	460/60/3	85	89	3460	NOTES 1 THROUGH 6
6-REF-3	GREENHECK	SQ-100-A	ROOM C-128A	RELIEF FAN	500	120	DUCT LINLINE	0.25	905	0.25 HP	BELT	460/60/3	--	--	75	NOTE 7 & 8

NOTES:

1. PROVIDE FAN WITH SINGLE WALL BYPASS AIR PLENUM WITH SIDE EXHAUST INLET, EXCELON FLEXIBLE CONNECT-CHEMICAL RESISTANT SLEEVE.
2. PROVIDE FAN WITH HEAVY DUTY BYPASS CONTROL DAMPER AND ISOLATION CONTROL DAMPER. PROVIDE WEATHER HOOD OVER BYPASS DAMPER WITH INLET SCREEN. AND BOLTED ACCESS DOORS.
3. PROVIDE ADDITIONAL FACTORY MOUNTED AND WIRED DISCONNECT SWITCH. FAN SHALL HAVE NEMA PREMIUM EFFICIENCY VFD RATED MOTOR WITH CLASS F INSULATION. PROVIDE VARIBLE FREQUENCY DRIVE WITH DISCONNECT.
4. PROVIDE FAN WITH SEISMIC ISOLATOR BASE WITH 2" DEFLECTION SPRING ISOLATORS. SEE MECHANICAL DETAIL FOR FAN MOUNTING. PROVIDE FACTORY SUPPLIED MINIMUM 21 INCH HIGH SINGLE WALL GALVANIZED CURB FOR MOUNTING PLENUM.
5. FAN SHALL BE UL/cUL-705 LISTED. ENTIRE FAN UNIT SHALL BE COATED WITH LABCOAT, DARK GREY (041).

PUMP SCHEDULE

UNIT MARK		6-CHP-1	6-CHP-2	6-HHP-1	6-HHP-2
	OPERATING MODE	DESIGN	DESIGN	DESIGN	DESIGN
	MANUFACTURER	BELL & GOSSETT	BELL & GOSSETT	BELL & GOSSETT	BELL & GOSSETT
	MODEL	2-1/2BB SERIES 1510	2-1/2BB SERIES 1510	2 BC - SERIES 1510	2 BC - SERIES 1510
	SERVICE	CHILLED WATER	CHILLED WATER	HEATING HOT WATER	HEATING HOT WATER
	TYPE	END SUCTION	END SUCTION	END SUCTION	END SUCTION
	MATERIALS OF CONSTR.	BRONZE FITTED	BRONZE FITTED	BRONZE FITTED	BRONZE FITTED
PERFORMANCE					
	GPM	215.0	215.0	110.0	110.0
	PUMP HEAD (FT OF H2O)	63.0	63.0	52.0	52.0
	IMPELLER SIZE (INCHES)	6.375	6.375	6.375	6.375
	EFFICIENCY	75.1%	75.1%	63.9%	63.9%
	NPSH REQUIRED (FT OF H2O)	5	5	5	5
	PUMP POWER (BHP)	4.58	4.58	2.28	2.28
MOTOR					
	MOTOR HP	10.0	10.0	5.0	5.0
	MOTOR RPM	1,800	1,800	1,800	1,800
	MOTOR VOLTAGE	460-3-60	460-3-60	460-3-60	460-3-60
	MOTOR TYPE	(TEFC)	(TEFC)	(TEFC)	(TEFC)
	MOTOR EFFICIENCY	PREMIUM	PREMIUM	PREMIUM	PREMIUM
	MOTOR CONTROL	VFD	VFD	VFD	VFD
OPERATING WEIGHT (LBS)		380	380	280	280
NOTES:		1,3,4	1,2,3,4	1,3,5	1,2,3, 5
NOTES/REMARKS:					
	1. PROVIDE OSHA COUPLING GUARD, CENTER DROP OUT SPACES COUPLING, FABRICATED HEAVY DUTY BASEPLATE. FOR ANCHORAGE SEE MECHANICAL DETAILS 10 & 11/M503.				
	2. STAND BY PUMP				
	3. PROVIDE NON OVERLOADING PUMP MOTORS.				
	4. THE CHILLED WATER PUMP AND ITS VFD SHALL BE PROVIDED AS A PART OF THE MULTISTACK MODULAR CHILLER PACKAGE.				
	5. THE HEATING HOT WATER PUMP AND ITS VFD SHALL BE PROVIDED AS A PART OF THE STEAM TO HEATING HOT WATER EXCHANGER PACKAGE.				

FINAL BID DOCUMENTS

HILLIARD ARCHITECTS INC. COPYRIGHT

Revisions: Date

CONSULTANTS:

SYSKA HENNESSY GROUP
A member company of SH Group, Inc.

Syska Hennessy Group, Inc.
425 California Street
Suite 700
San Francisco, CA 94104
Tel: 415.288.9060
Fax: 415.835.0385
www.syska.com

REGISTERED PROFESSIONAL ENGINEER
PRASAD V. MORE
No. M35846
Exp.Mar.31,2014
MECHANICAL
STATE OF CALIFORNIA

ARCHITECT/ENGINEERS:

ESTABLISHED 1988 HILLIARD ARCHITECTS GOING GREEN

HILLIARD ARCHITECTS, INC
251 Post Street, Suite 620
San Francisco, CA 94108-5017
Tel 415 989 6400, Fax 415 989 3056
www.HilliardArchitects.com

Drawing Title: **MECHANICAL SCHEDULES**

Approved: Project Director

Project Title: **VA PA BLDG 6 LAB RENOVATION**

Location: **VAPAHCS, PALO ALTO CAMPUS 3801 MIRANDA AVE. PALO ALTO, CA 94304**

Date: **04.17.2014** Checked: **PVM** Drawn: **JP**

Project Number: **640-13-121P**

Building Number: **6**

Drawing Number: **M002**

Dwg. of

Office of Construction and Facilities Management

Department of Veterans Affairs

VA FORM 08-6231

1ST FLOOR VAV TERMINAL BOX AND VAV FLOW CONTROL VALVE (VENTURI VALVE) SCHEDULE

MARK	ROOM #	AREA SERVED	SYSTEM	TERMINAL BOX TYPE	MANUFACTURER / MODEL	INLET SIZE	QTY.	AIRFLOW, CFM		STATIC PRESSURE (INCHES OF WATER)		HOT WATER REHEAT COIL DATA										NOTES
								MAX	MIN	INLET	DOWN	CFM	EWT (F)	EAT (F)	LAT (F)	CAPACITY (MBH)	FLUID FLOW (GPM)	NO. OF ROWS	COIL SIZE	MAX. WATER PRE. DROP (IN OF H2O)	MAX. AIR PRE. DROP (IN OF H2O)	
AFCV 1-1	C129	MICROSCOPY	6-AHU-1A	VAV	PRICE / VVA	108	1	250	140	1.5	0.35	140	180	55.00	80.00	3.78	0.30	1	8	0.07	0.07	1, 2, 4, 5
AFCV 1-2	C141	FREEZERS	6-AHU-1A	VAV	PRICE / VVA	108	1	370	240	1.5	0.35	240	180	55.00	80.00	6.48	0.42	1	8	0.12	0.13	1, 2, 4, 5
AFCV 1-3A	C143	OPEN LAB	6-AHU-1A	VAV	PRICE / VVA	110	1	935	745	1.5	0.35	745	180	55.00	80.00	20.12	0.60	1	10	0.52	0.08	1, 2, 4, 5
AFCV 1-3B	C143	OPEN LAB	6-AHU-1A	VAV	PRICE / VVA	110	1	935	745	1.5	0.35	745	180	55.00	80.00	20.12	0.60	1	10	0.52	0.08	1, 2, 4, 5
AFCV 1-4	C143A	TISSUE CULTURE	6-AHU-1A	VAV	PRICE / VVA	110	1	820	560	1.5	0.35	560	180	55.00	80.00	15.12	1.20	1	10	0.25	0.17	1, 2, 4, 5
AFCV 1-5	C144	CENTRIFUGES	6-AHU-1A	VAV	PRICE / VVA	108	1	210	180	1.5	0.35	180	180	55.00	80.00	4.86	0.30	1	8	0.07	0.05	1, 2, 4, 5
AFCV 1-6	C144A	FUME HOOD	6-AHU-1A	VAV	PRICE / VVA	108	1	380	380	1.5	0.35	380	180	55.00	80.00	10.26	1.20	1	8	0.60	0.14	1, 2, 4, 5
AFCV 1-7	--	CIRCULATION WEST	6-AHU-1A	VAV	PRICE / VVA	108	1	620	620	1.5	0.35	620	180	55.00	80.00	16.74	2.80	1	8	3.03	0.20	1, 2, 4, 5
AFCV 1-8	--	CIRCULATION EAST	6-AHU-1A	VAV	PRICE / VVA	108	1	580	580	1.5	0.35	580	180	55.00	80.00	15.66	2.20	1	8	2.06	0.18	1, 2, 4, 5
TU 1-1	C124	(E) OFFICE	6-AHU-1B	VAV	PRICE / SDV5	4	1	130	50	1.5	0.30	110	180	55.00	91.1	4.29	0.30	1	6	0.07	0.02	1, 2, 3
TU 1-2	C125	(E) OFFICE	6-AHU-1B	VAV	PRICE / SDV5	4	1	130	50	1.5	0.30	90	180	55.00	95.2	3.91	0.30	1	6	0.07	0.02	1, 2, 3
TU 1-3	C126	(E) OFFICE	6-AHU-1B	VAV	PRICE / SDV5	4	1	130	50	1.5	0.30	120	180	55.00	89.3	4.45	0.30	1	6	0.07	0.02	1, 2, 3
TU 1-4	C154	(E) OFFICE	6-AHU-1B	VAV	PRICE / SDV5	4	1	110	50	1.5	0.30	110	180	55.00	91.1	4.29	0.30	1	6	0.07	0.01	1, 2, 3
TU 1-5	C130	(E) BREAKROOM	6-AHU-1C	VAV	PRICE / SDV5	5	1	280	90	1.5	0.30	140	180	55.00	86.3	3.83	0.30	1	8	0.07	0.08	1, 2, 3
TU 1-6	C131	(E) CONFERENCE ROOM	6-AHU-1C	VAV	PRICE / SDV5	8	1	680	210	1.5	0.30	300	180	55.00	80.3	11.70	0.45	1	6	0.17	0.24	1, 2, 3
TU 1-7	C132	(E) OFFICE	6-AHU-1C	VAV	PRICE / SDV5	4	1	130	50	1.5	0.30	110	180	55.00	91.1	4.29	0.30	1	6	0.07	0.02	1, 2, 3
TU 1-8	C133	(E) OFFICE	6-AHU-1C	VAV	PRICE / SDV5	4	1	130	50	1.5	0.30	110	180	55.00	91.1	4.29	0.30	1	6	0.07	0.02	1, 2, 3
TU 1-9	C134	(E) OFFICE	6-AHU-1C	VAV	PRICE / SDV5	4	1	130	50	1.5	0.30	100	180	55.00	91.1	3.00	0.30	1	6	0.07	0.02	1, 2, 3
TU 1-10	C135	(E) OFFICE	6-AHU-1C	VAV	PRICE / SDV5	4	1	170	50	1.5	0.30	170	180	55.00	82.8	8.39	0.30	1	6	0.07	0.03	1, 2, 3
TU 1-11	C136	WORK ROOM	6-AHU-1C	VAV	PRICE / SDV5	4	1	110	50	1.5	0.30	70	180	55.00	100.7	3.45	0.30	1	6	0.07	0.01	1, 2, 3
TU 1-12	C137, C138	WORK ROOM	6-AHU-1C	VAV	PRICE / SDV5	4	1	160	60	1.5	0.30	120	180	55.00	82.50	3.56	0.30	1	6	0.07	0.01	1, 2, 3
TU 1-13	C139	COMPUTATION / OPEN OFFICE	6-AHU-1C	VAV	PRICE / SDV5	12	1	1670	500	1.5	0.30	600	180	55.00	80.2	16.33	0.65	1	12	0.11	0.34	1, 2, 3
TU 1-14	C140	STAFF LOUNGE	6-AHU-1C	VAV	PRICE / SDV5	6	1	400	120	1.5	0.30	380	180	55.00	80.2	10.34	1.25	1	6	0.64	0.15	1, 2, 3

NOTES:

1. PROVIDE VAV TERMINAL UNIT / FLOW CONTROL VALVE WITH HOT WATER REHEAT COIL. SEE PLANS FOR LEFT HAND OR RIGHT HAND COIL AND CONTROLS CONNECTION. PROVIDE LOCATIONS COIL CONNECTIONS AND CONTROL BOX ACCORDINGLY.
2. ALL CONTROLS SHALL BE PROVIDED BY CONTROLS CONTRACTOR. MECHANICAL CONTRACTOR SHALL COORDINATE WITH CONTROLS CONTRACTOR AS NECESSARY. PROVIDE ALL FLOW CONTROL VALVES WITH HIGH SPEED ACTUATORS.
3. PROVIDE VAV BOX WITH FACTORY SUPPLIED 5 FEET DISCHARGE SOUND ATTENUATOR WITH ACOUSTIC LINING FREE FROM FORMALDEHYDE, FIBER AND PDBE.
4. MOC SHALL BE - BODY: 14 GA. SPUN ALUMINUM, PLUNGER: 16 GA. SPUN ALUMINUM, SHAFT: 0.375" DIAMETER TEFLON-COATED STAINLESS STEEL, SHAFT SUPPORTS: STAINLESS STEEL, SHAFT BEARINGS: WEAR-RESISTANT WITH TEFLON ADDITIVE, HARDWARE: STAINLESS STEEL.
5. PROVIDE FLOW CONTROL VALVE WITH 0.75" THICK EXTERNAL FIBERFREE FOAM INSULATION.

2ND FLOOR VAV FLOW CONTROL VALVE (VENTURI VALVE) SCHEDULE

MARK	ROOM #	AREA SERVED	SYSTEM	TERMINAL BOX TYPE	MANUFACTURER / MODEL	INLET SIZE	QTY.	AIRFLOW, CFM		STATIC PRESSURE (INCHES OF WATER)		HOT WATER REHEAT COIL DATA										NOTES
								MAX.	MIN.	INLET	DOWN	CFM	EWT (F)	EAT (F)	LAT (F)	CAPACITY (MBH)	FLUID FLOW (GPM)	NO. OF ROWS	COIL SIZE	MAX. WATER PRE. DROP (IN OF H2O)	MAX. AIR PRE. DROP (IN OF H2O)	
AFCV 2-1	C240	TISSUE CULTURE 2	6-AHU-2A	VAV	PRICE / VVA	110	1	930	440	1.5	0.25	440	180	55.00	80.20	11.98	0.75	1	10	0.11	0.21	1, 2, 3, 4
AFCV 2-2	C241	TISSUE CULTURE 2	6-AHU-2A	VAV	PRICE / VVA	110	1	910	420	1.5	0.25	420	180	55.00	80.30	11.48	0.70	1	10	0.10	0.20	1, 2, 3, 4
AFCV 2-3	C242	FILM PROCESSING	6-AHU-2A	VAV	PRICE / VVA	108	1	80	80	1.5	0.25	80	180	55.00	97.80	3.70	0.30	1	8	0.07	0.01	1, 2, 3, 4
AFCV 2-4	C243	SUPPLIES	6-AHU-2A	VAV	PRICE / VVA	108	1	80	80	1.5	0.25	80	180	55.00	97.80	3.70	0.30	1	8	0.07	0.01	1, 2, 3, 4
AFCV 2-5	C244	FUME HOOD	6-AHU-2A	VAV	PRICE / VVA	110	1	830	830	1.5	0.25	830	180	55.00	80.00	22.41	3.50	1	10	1.60	0.17	1, 2, 3, 4
AFCV 2-6A	C245	FREEZER FARM	6-AHU-2A	VAV	PRICE / VVA	108	1	200	200	1.5	0.25	200	180	55.00	80.20	5.44	0.70	1	8	0.86	0.15	1, 2, 3, 4
AFCV 2-6B	C245	FREEZER FARM	6-AHU-2A	VAV	PRICE / VVA	108	1	200	200	1.5	0.25	200	180	55.00	80.20	5.44	0.70	1	8	0.86	0.15	1, 2, 3, 4
AFCV 2-7A	C246	EQUIPMENT SUPPLIES	6-AHU-2A	VAV	PRICE / VVA	110	1	960	160	1.5	0.25	160	180	55.00	87.50	5.62	0.30	1	10	0.10	0.43	1, 2, 3, 4
AFCV 2-7B	C246	EQUIPMENT SUPPLIES	6-AHU-2A	VAV	PRICE / VVA	110	1	960	160	1.5	0.25	160	180	55.00	87.50	5.62	0.30	1	10	0.10	0.43	1, 2, 3, 4
AFCV 2-8	C247	MICROSCOPY	6-AHU-2A	VAV	PRICE / VVA	108	1	260	150	1.5	0.25	150	180	55.00	85.00		0.30	1	8	0.07	0.07	1, 2, 3, 4
AFCV 2-9	C250	TISSUE CULTURE SUPPORT	6-AHU-2A	VAV	PRICE / VVA	112	1	1190	320	1.5	0.25	320	180	55.00	87.50	11.23	0.60	1	12	0.10	0.19	1, 2, 3, 4
AFCV 2-10	C251	FLEX LAB	6-AHU-2A	VAV	PRICE / VVA	108	1	530	190	1.5	0.25	190	180	55.00	84.20	5.99	0.30	1	8	0.09	0.15	1, 2, 3, 4
AFCV 2-11A	--	CIRCULATION EAST	6-AHU-2A	VAV	PRICE / VVA	108	1	330	330	1.5	0.25	330	180	55.00	85.50	10.87	0.75	1	8	4.32	0.15	1, 2, 3, 4
AFCV 2-11B	--	CIRCULATION EAST	6-AHU-2A	VAV	PRICE / VVA	108	1	330	330	1.5	0.25	330	180	55.00	85.50	10.87	0.75	1	8	4.32	0.15	1, 2, 3, 4
AFCV 2-12A	C248a	OPEN LAB - SOUTH WEST	6-AHU-2B	VAV	PRICE / VVA	112	1	1200	420	1.5	0.25	420	180	55.00	80.20	11.43	0.75	1	12	0.90	0.19	1, 2, 3, 4
AFCV 2-12B	C248a	OPEN LAB - SOUTH WEST	6-AHU-2B	VAV	PRICE / VVA	112	1	1200	420	1.5	0.25	420	180	55.00	80.20	11.43	0.75	1	12	0.90	0.19	1, 2, 3, 4
AFCV 2-12C	C248a	OPEN LAB - SOUTH WEST	6-AHU-2B	VAV	PRICE / VVA	112	1	1200	420	1.5	0.25	420	180	55.00	80.20	11.43	0.75	1	12	0.90	0.19	1, 2, 3, 4
AFCV 2-12D	C248a	OPEN LAB - SOUTH WEST	6-AHU-2B	VAV	PRICE / VVA	112	1	1200	420	1.5	0.25	420	180	55.00	80.20	11.48	0.75	1	12	0.90	0.19	1, 2, 3, 4
AFCV 2-13A	C248b	OPEN LAB - NORTH WEST	6-AHU-2B	VAV	PRICE / VVA	108	1	600	420	1.5	0.25	420	180	55.00	80.30	11.48	0.75	1	8	0.86	0.24	1, 2, 3, 4
AFCV 2-13B	C248b	OPEN LAB - NORTH WEST	6-AHU-2B	VAV	PRICE / VVA	108	1	600	420	1.5	0.25	420	180	55.00	80.30	11.48	0.75	1	8	0.86	0.24	1, 2, 3, 4
AFCV 2-13C	C248b	OPEN LAB - NORTH WEST	6-AHU-2B	VAV	PRICE / VVA	108	1	600	420	1.5	0.25	420	180	55.00	80.30	11.48	0.75	1	8	0.86	0.24	1, 2, 3, 4
AFCV 2-13D	C248b	OPEN LAB - NORTH WEST	6-AHU-2B	VAV	PRICE / VVA	108	1	600	420	1.5	0.25	420	180	55.00	80.30	11.48	0.75	1	8	0.86	0.24	1, 2, 3, 4
AFCV 2-14A	C248c	OPEN LAB - NORTH	6-AHU-2B	VAV	PRICE / VVA	112	1	1250	875	1.5	0.25	875	180	55.00	79.60	23.25	3.80	1	12	1.80	0.22	1, 2, 3, 4
AFCV 2-14B	C248c	OPEN LAB - NORTH	6-AHU-2B	VAV	PRICE / VVA	112	1	1250	875	1.5	0.25	875	180	55.00	79.60	23.25	3.80	1	12	1.80	0.22	1, 2, 3, 4

NOTES:

1. PROVIDE VAV TERMINAL UNIT / FLOW CONTROL VALVE WITH HOT WATER REHEAT COIL. SEE PLANS FOR LEFT HAND OR RIGHT HAND COIL AND CONTROLS CONNECTION. PROVIDE LOCATIONS COIL CONNECTIONS AND CONTROL BOX ACCORDINGLY.
2. ALL CONTROLS SHALL BE PROVIDED BY CONTROLS CONTRACTOR. MECHANICAL CONTRACTOR SHALL COORDINATE WITH CONTROLS CONTRACTOR AS NECESSARY. PROVIDE ALL FLOW CONTROL VALVES WITH HIGH SPEED ACTUATORS.
3. MOC SHALL BE - BODY: 14 GA. SPUN ALUMINUM, PLUNGER: 16 GA. SPUN ALUMINUM, SHAFT: 0.375" DIAMETER TEFLON-COATED STAINLESS STEEL, SHAFT SUPPORTS: STAINLESS STEEL, SHAFT BEARINGS: WEAR-RESISTANT WITH TEFLON ADDITIVE, HARDWARE: STAINLESS STEEL.
4. PROVIDE FLOW CONTROL VALVE WITH 0.75" THICK EXTERNAL FIBERFREE FOAM INSULATION.

SPLIT SYSTEM INDOOR FAN COIL UNIT SCHEDULE

UNIT TAG	MANUFACTURER	UNIT TYPE	MODEL	SERVICE	ASSOCIATED CONDENSING UNIT ON ROOF	LOCATION	SUPPLY AIR	MIN. OUTSIDE AIR	EVAPORATOR ENTERING AIR TEMPERATURES		COOLING CAPACITY		HEATING CAPACITY	ELECTRICAL			OPERATING WEIGHT (LBS)	REMARKS
							CFM	CFM	DBT (°F)	WBT (°F)	SENS. (MBH)	TOTAL (MBH)	TOTAL (MBH)	MCA (AMP)	MOCP (AMP)	SERVICE V/HZ/PH		
6-FCU-1A1	MITSUBISHI	PKA-A24KA	HIGH WALL MOUNTED	FIRST FLOOR - IDF ROOM	6-CU-1A1	ROOM C127	775	NA	95	71	24.0	24.0	NA	1.25	--	208 / 60 / 1	55	1, 2, 3, 4, 5, 6
6-FCU-1A2	MITSUBISHI	PKA-A24KA	HIGH WALL MOUNTED	FIRST FLOOR - IDF ROOM	6-CU-1A2	ROOM C127	775	NA	95	71	24.0	24.0	NA	1.25	--	208 / 60 / 1	55	1, 2, 3, 4, 5, 6
6-FCU-2A1	MITSUBISHI	PLA-A36BA4	CEILING CASSETTE TYPE	SECOND FLOOR - FREEZER FARM	6-CU-2A1	ROOM C245	1060	NA	95	71	36.0	36.0	NA	2.00	--	208 / 60 / 1	75	1, 2, 3, 4, 5, 6
6-FCU-2A2	MITSUBISHI	PLA-A36BA4	CEILING CASSETTE TYPE	SECOND FLOOR - FREEZER FARM	6-CU-2A2	ROOM C245	1060	NA	95	71	36.0	36.0	NA	2.00	--	208 / 60 / 1	75	1, 2, 3, 4, 5, 6
6-FCU-2A3	MITSUBISHI	PLA-A36BA4	HIGH WALL MOUNTED	SECOND FLOOR - FREEZER FARM	6-CU-2A3	ROOM C245	1060	NA	95	71	36.0	36.0	NA	2.00	--	208 / 60 / 1	55	1, 2, 3, 4, 5, 6

NOTES:

1. INSTALL FAN COIL AS RECOMMENDED BY THE UNIT MANUFACTURER. SEE MECHANICAL DETAILS FOR MOUNTING.
2. PROVIDE UNIT WITH MANUFACTURER SUPPLIED CONDENSATE WATER PUMP.
3. PROVIDE MFR SUPPLIED, WALL MOUNTED WIRED THERMOSTAT.
4. INDOOR FAN COIL UNIT IS POWERED FROM OUTDOOR CONDENSING UNIT USING A-CONTROL. COORDINATE WITH DIV. 28 TO PROVIDE CONDUIT AND WIRING ACCORDINGLY.
5. PROVIDE UNIT WITH FACTORY SUPPLIED REFRIGERANT LINE SETS OF REQUIRED LENGTH.
6. COOLING ONLY UNIT. PROVIDE UNIT WITH BcNET COMMUNICATION INTERFACE MODULE TO CONNECT TO THE BUILDING MBS TO MONITOR SPACE TEMPERATURE.

BIOLOGICAL SAFETY CABINET EXHAUST SCHEDULE (FOR REFERENCE ONLY)

MARK	LOCATION	SYSTEM AND/OR SERVICE	HOOD TYPE	HOOD SIZE (WIDTH)		EXHAUST				REMARKS
						AIR FLOW		APD HOOD ONLY		
				IN	[mm]	CFM	[L/s]	IN WG	[Pa]	
6-BSC-01	ROOM C 143A	EXHAUST SYSTEM 6-EF1	BSC-1 CLASS II TYPE A2	48	[1200]	345	[160]	0.2	[50]	THERMO SCIENTIFC
6-BSC-02	ROOM C 143A	EXHAUST SYSTEM 6-EF1	BSC-1 CLASS II TYPE A2	48	[1200]	345	[160]	0.2	[50]	THERMO SCIENTIFC
6-BSC-03	ROOM C 143A	EXHAUST SYSTEM 6-EF1	BSC-1 CLASS II TYPE A2	48	[1200]	345	[160]	0.2	[50]	THERMO SCIENTIFC
6-BSC-04	ROOM C 240	EXHAUST SYSTEM 6-EF1	BSC-1 CLASS II TYPE A2	48	[1200]	345	[160]	0.2	[50]	THERMO SCIENTIFC
6-BSC-05	ROOM C 240	EXHAUST SYSTEM 6-EF1	BSC-2 CLASS II TYPE A2	66	[1700]	570	[270]	0.2	[50]	NUAIRE
6-BSC-06	ROOM C 240	EXHAUST SYSTEM 6-EF1	BSC-2 CLASS II TYPE A2	66	[1700]	570	[270]	0.2	[50]	NUAIRE
6-BSC-07	ROOM C 241	EXHAUST SYSTEM 6-EF1	BSC-1 CLASS II TYPE A2	48	[1200]	810	[380]	0.2	[50]	THERMO SCIENTIFC
6-BSC-08	ROOM C 241	EXHAUST SYSTEM 6-EF1	BSC-3 CLASS II TYPE A2	78	[2000]	670	[320]	0.2	[50]	NUAIRE
6-BSC-09	ROOM C 241	EXHAUST SYSTEM 6-EF1	BSC-3 CLASS II TYPE A2	78	[2000]	670	[320]	0.2	[50]	NUAIRE

NOTE

THE HOOD DATA (EXHAUST AIR VOLUME AND PRESSURE DROP) IS BASED ON A REPRESENTATIVE MAKE AND MODEL NUMBER. IN THE EVENT THE HOOD SELECTED AND FURNISHED BY THE OWNERS HAS DIFFERENT HOOD DATA, THE CONTRACTOR SHALL BE RESPONSIBLE FOR MAKING NECESSARY MODIFICATIONS TO THE DESIGN AND CONSTRUCTION WITHOUT ANY ADDITIONAL COST TO THE OWNERS.

FUME HOOD EXHAUST SCHEDULE (FOR REFERENCE ONLY)

MARK	LOCATION	SYSTEM AND/OR SERVICE	HOOD TYPE	HOOD SIZE (WIDTH)		EXHAUST				REMARKS
						AIR FLOW		APD HOOD ONLY		
				IN	[mm]	CFM	[L/s]	IN WG	[Pa]	
6-HD-01	ROOM C144A	EXHAUST SYSTEM 6-EF1	SEEARCH. DRAWINGS	60	[1500]	1000	[470]	0.18	[45]	THERMO SCIENTIFC HAMILTON - SAFEAIRE II BENCH - TYPE
6-HD-02	ROOM C 144A	EXHAUST SYSTEM 6-EF1	SEEARCH. DRAWINGS	60	[1500]	1000	[470]	0.18	[45]	THERMO SCIENTIFC HAMILTON - SAFEAIRE II BENCH - TYPE
6-HD-03	ROOM C 244	EXHAUST SYSTEM 6-EF1	SEEARCH. DRAWINGS	60	[1500]	1000	[470]	0.18	[45]	THERMO SCIENTIFC HAMILTON - SAFEAIRE II BENCH - TYPE
6-HD-04	ROOM C 244	EXHAUST SYSTEM 6-EF1	SEEARCH. DRAWINGS	60	[1500]	1000	[470]	0.18	[45]	THERMO SCIENTIFC HAMILTON - SAFEAIRE II BENCH - TYPE
6-HD-05	ROOM C 244	EXHAUST SYSTEM 6-EF1	SEEARCH. DRAWINGS	60	[1500]	1000	[470]	0.18	[45]	THERMO SCIENTIFC HAMILTON - SAFEAIRE II BENCH - TYPE
6-HD-06	ROOM C 244	EXHAUST SYSTEM 6-EF1	SEEARCH. DRAWINGS	60	[1500]	1000	[470]	0.18	[45]	THERMO SCIENTIFC HAMILTON - SAFEAIRE II BENCH - TYPE

NOTE

CONTRACTOR SHALL ENSURE THAT EACH FUME HOOD IS PROVIDED WITH BY-PASS LOUVER. THE HOOD DATA (EXHAUST AIR VOLUME AND PRESSURE DROP) IS BASED ON A REPRESENTATIVE MAKE AND MODEL NUMBER. IN THE EVENT THE HOOD SELECTED AND FURNISHED BY THE OWNERS HAS DIFFERENT HOOD DATA, THE CONTRACTOR SHALL BE RESPONSIBLE FOR MAKING NECESSARY MODIFICATIONS TO THE DESIGN AND CONSTRUCTION WITHOUT ANY ADDITIONAL COST TO THE OWNERS.

HILLIARD ARCHITECTS INC. COPYRIGHT

FINAL BID DOCUMENTS

Revisions: Date

CONSULTANTS:

SYSKA HENNESSY GROUP
A member company of SH Group, Inc.

Syska Hennessy Group, Inc.
425 California Street
Suite 700
San Francisco, CA 94104
Tel: 415.288.9060
Fax: 415.835.0385
www.syska.com

REGISTERED PROFESSIONAL ENGINEER
PRASAD V. MORE
No. M35846
Exp.Mar.31,2014
MECHANICAL
STATE OF CALIFORNIA

ARCHITECT/ENGINEERS:

ESTABLISHED 1988 HILLIARD ARCHITECTS GOING GREEN

HILLIARD ARCHITECTS, INC
251 Post Street, Suite 620
San Francisco, CA 94108-5017
Tel 415 989 6400, Fax 415 989 3056
www.HilliardArchitects.com

Drawing Title: **MECHANICAL SCHEDULES**

Approved: Project Director

Project Title: **VA PA BLDG 6 LAB RENOVATION**

Location: VAPAHCS, PALO ALTO CAMPUS, 3801 MIRANDA AVE. PALO ALTO, CA 94304

Date: 04.17.2014 | Checked: PM | Drawn: JP

Project Number: 640-13-121P

Building Number: 6

Drawing Number: M003

Dwg. of

Office of Construction and Facilities Management

Department of Veterans Affairs

VA FORM 08-6231

AIR DEVICE SCHEDULE (SUPPLY)

MARK	TYPE	AIR FLOW MIN CFM	AIR FLOW MIN [L/s]	AIR FLOW MAX CFM	AIR FLOW MAX [L/s]	MAX APD IN WG	MAX APD [Pa]	MOUNTING	PANEL/FRAME SIZE IN x IN	PANEL/FRAME SIZE [mm x mm]	NECK SIZE IN	NECK SIZE [mm]	NC	DAMPER	FINISH	REMARKS
SD-11	LOUVERED FACE	40	[19]	160	[76]	0.080	[20]	CEILING	24 x 24	[600 x 600]	6 ø	[152 ø]	19	NONE	WHITE	1, 2, 3
SD-12	LOUVERED FACE	70	[33]	280	[130]	0.100	[25]	CEILING	24 x 24	[600 x 600]	8 ø	[203 ø]	23	NONE	WHITE	1, 2, 3
SD-13	LOUVERED FACE	110	[52]	380	[180]	0.090	[23]	CEILING	24 x 24	[600 x 600]	10 ø	[254 ø]	22	NONE	WHITE	1, 2, 3
SD-14	LOUVERED FACE	160	[76]	470	[220]	0.080	[20]	CEILING	24 x 24	[600 x 600]	12 ø	[305 ø]	19	NONE	WHITE	1, 2, 3
SD-15	LOUVERED FACE	220	[100]	640	[300]	0.090	[23]	CEILING	24 x 24	[600 x 600]	14 ø	[356 ø]	21	NONE	WHITE	1, 2, 3
SD-16	LOUVERED FACE	250	[120]	740	[350]	0.100	[25]	CEILING	24 x 24	[600 x 600]	16 ø	[406 ø]	22	NONE	WHITE	1, 2, 3

NOTES

1. SEE FLOOR PLAN FOR THROW PATTERN. PROVIDE AIR DEVICE BORDERS ACCORDING TO THE CEILING TYPE IN EACH ROOM PER REFLECED CEILING PLANS.
2. SEE DETAIL FOR DAMPER IN BRANCH DUCT SERVING EACH DIFFUSER.
3. PROVIDE SQUARE TO ROUND ADAPTER AS REQUIRED.

AIR DEVICE SCHEDULE (RETURN / EXHAUST)

MARK	TYPE	AIR FLOW MIN CFM	AIR FLOW MIN [L/s]	AIR FLOW MAX CFM	AIR FLOW MAX [L/s]	MAX APD IN WG	MAX APD [Pa]	MOUNTING	PANEL/FRAME SIZE IN x IN	PANEL/FRAME SIZE [mm x mm]	NECK SIZE IN x IN	NECK SIZE [mm x mm]	NC	DAMPER	FINISH	REMARKS
RG-21 / EG-21	PERFORATED	60	[28]	100	[47]	0.088	22.000	CEILING	24 x 24	[600 x 600]	6 DIAM	[152 DIAM]	13	NONE	WHITE	1, 2, 3
RG-22 / EG-22	PERFORATED	110	[52]	170	[80]	0.088	22.000	CEILING	24 x 24	[600 x 600]	8 DIAM	[203 DIAM]	13	NONE	WHITE	1, 2, 3
RG-23 / EG-23	PERFORATED	170	[80]	250	[120]	0.088	22.000	CEILING	24 x 24	[600 x 600]	10 DIAM	[254 DIAM]	14	NONE	WHITE	1, 2, 3
RG-24 / EG-24	PERFORATED	240	[110]	400	[190]	0.088	22.000	CEILING	24 x 24	[600 x 600]	12 DIAM	[305 DIAM]	12	NONE	WHITE	1, 2, 3
RG-25 / EG-25	PERFORATED	320	[150]	500	[240]	0.087	22.000	CEILING	24 x 24	[600 x 600]	14 DIAM	[356 DIAM]	14	NONE	WHITE	1, 2, 3
RG-26 / EG-26	PERFORATED	420	[200]	700	[330]	0.087	22.000	CEILING	24 x 24	[600 x 600]	16 DIAM	[406 DIAM]	16	NONE	WHITE	1, 2, 3
RR-51 / ER-51	RETURN / EXHAUST REGISTER	130	[61]	210	[99]	0.078	20.000	WALL	10 x 10	[254 x 254]	8 x 8	[203 x 203]	13	OBD	WHITE	1, 2, 3
RR-52 / ER-52	RETURN / EXHAUST REGISTER	200	[94]	330	[160]	0.078	20.000	WALL	12 x 12	[305 x 305]	10 x 10	[254 x 254]	15	OBD	WHITE	1, 2, 3
RR-53 / ER-53	RETURN / EXHAUST REGISTER	270	[130]	440	[210]	0.078	20.000	WALL	14 x 14	[356 x 356]	12 x 12	[305 x 305]	17	OBD	WHITE	1, 2, 3
RR-513 / ER-513	RETURN / EXHAUST REGISTER	460	[220]	1260	[590]	0.095	24.000	WALL	32 x 14	[813 x 356]	30 x 12	[762 x 305]	24	OBD	WHITE	1, 2, 3
RG-01 / EG-01	RETURN / EXHAUST GRILLE	1840	[870]	5040	[2400]	0.095	24.000	WALL	30 x 54	[813 x 1270]	30 x 48	[762 x 1219]	30	OBD	WHITE	1, 2, 3
RG-02 / EG-02	RETURN / EXHAUST GRILLE	920	[430]	2520	[1200]	0.095	24.000	WALL	30 x 34	[762 x 864]	28 x 32	[711 x 813]	30	OBD	WHITE	1, 2, 3
RG-03 / EG-03	RETURN / EXHAUST GRILLE	2300	[1100]	6300	[3000]	0.095	24.000	WALL	32 x 62	[813 x 1575]	30 x 60	[762 x 1524]	30	OBD	WHITE	1, 2, 3
RG-04/EG-04	EGGCRATE	546	[260]	1274	[600]	0.073	18.250	CEILING	24 x 12	[600 x 300]	24 x 12	[600 x 300]	19	OBD	WHITE	1, 2, 3
RG-05/EG-05	EGGCRATE	1125	[530]	2625	[1200]	0.073	18.250	CEILING	24 x 24	[600 x 600]	24 x 24	[600 x 600]	20	OBD	WHITE	1, 2, 3

NOTE

1. PROVIDE AIR DEVICE BORDERS ACCORDING TO THE CEILING TYPE IN EACH ROOM PER REFLECED CEILING PLANS.
2. SEE DETAIL FOR DAMPER IN BRANCH DUCT SERVING EACH GRILLE.
3. PROVIDE SQUARE TO ROUND ADAPTER AS REQUIRED.

SOUND ATTENUATING DEVICE SCHEDULE

MARK	LOCATION	SYSTEM AND/OR SERVICE	TYPE	AIRFLOW CFM	AIRFLOW [L/s]	APD IN WG	APD [Pa]	INLET SIZE IN	INLET SIZE [mm]	LENGTH IN	LENGTH [mm]	DYNAMIC INSERTION LOSS DB OCTAVE BAND AND MID-FREQUENCY [CPS] 63	125	250	500	1000	2000	4000	8000	REMARKS
												1	2	3	4	5	6	7	8	
6-SAD-1AS	C128B	6-AHU-1A	ELBOW SILENSER	4700	[2200]	0.13	[33]	42 X 18	[900 x 900]	66	[1700]	6	10	14	18	24	23	19	15	RECTANGULAR ELBOW TYPE, SEE NOTES 1, & 2.
6-SAD-1BS	C128B	6-AHU-1B	ELBOW SILENSER	500	[240]	0.18	[45]	14 X 10	[900 x 900]	42	[1100]	5	14	19	23	27	23	23	19	RECTANGULAR ELBOW TYPE, SEE NOTES 1, & 2.
6-SAD-1CS	LOW ROOF	6-AHU-1C	ELBOW SILENSER	3860	[1800]	0.18	[45]	28 X 22	[900 x 900]	72	[1800]	7	10	11	18	21	20	16	14	RECTANGULAR ELBOW TYPE, SEE NOTES 1, & 2.
6-SAD-1CR	LOW ROOF	6-AHU-1C	ELBOW SILENSER	3860	[1800]	0.23	[58]	28 X 22	[900 x 900]	72	[1800]	9	13	21	21	29	34	27	20	RECTANGULAR ELBOW TYPE, SEE NOTES 1, & 2.
6-SAD-2AS	MECH. YARD	6-AHU-2A	ELBOW SILENSER	7100	[3400]	0.07	[18]	36 X 28	[900 x 900]	60	[1500]	6	7	8	14	15	18	15	12	RECTANGULAR ELBOW TYPE, SEE NOTES 1, & 2.
6-SAD-2BS	HIGH ROOF	6-AHU-2B	RECTANGULAR	8800	[4200]	0.19	[48]	46 X 26	[900 x 900]	48	[1200]	6	12	13	9	8	6	7	5	RECTANGULAR STRAIGHT LENGTH TYPE, SEE NOTES 1
6-SAD-EF1	HIGH ROOF	6-FHEF-1	ELBOW SILENSER	14200	[6700]	0.35	[88]	34 X 34	[900 x 900]	84	[2100]	8	10	17	21	31	31	19	13	RECTANGULAR ELBOW TYPE, SEE NOTES 1, & 2.
6-SAD-EF2	HIGH ROOF	6-FHEF-2	ELBOW SILENSER	13100	[6200]	0.32	[80]	34 X 32	[900 x 900]	96	[2400]	9	16	18	22	23	22	16	16	EXTENDED RECTANGULAR ELBOW TYPE, SEE NOTES 1, & 2.

NOTES:

1. PROVIDE WITH FIBER FREE FILM LINED SILENSER LINER
2. LENGTH SHOWN FOR ELBOW SILENSERS IS CENTER LINE LENGTH
3. SOUND DATA PROVIDED IN THIS SCHEDULE IS THE BASIS OF DESIGN. CONTRACTOR SHALL USE ACTUAL SOUND DATA OF THE UNITS TO PROVIDE SUITABLE SOUND ATTENUATORS TO ACHIEVE SPECIFIED NC LEVELS.

VARIABLE FREQUENCY DRIVE SCHEDULE

UNIT MARK	6-VFD-FHEF1A / B	6-VFD-FHEF2 A / B	6-VFD-REF1B	6-VFD-CHP1	6-VFD-CHP2	6-VFD-HHP1	6-VFD-HHP2	6-VFD-SF1 A1 / A2	6-VFD-SF1B	6-VFD-SF1C	6-VFD-RF1C	6-VFD-SF2 A1 / A2 / A3 / A4	6-VFD-SF2 B1 / B2 / B3 / B4
OPERATING MODE	DESIGN	DESIGN	DESIGN	DESIGN	DESIGN	DESIGN	DESIGN	DESIGN	DESIGN	DESIGN	DESIGN	DESIGN	DESIGN
MANUFACTURER	CERUS	CERUS	CERUS	CERUS	CERUS	CERUS	CERUS	CERUS	CERUS	CERUS	CERUS	CERUS	CERUS
MODEL	CIE3R-BYP020-P4/3	CIE3R-BYP010-P4/3	CIE1-BYP001-P4/3	CIE3R-BYP010-P4/3	CIE3R-BYP010-P4/3	CIE1-BYP007-P4/3	CIE1-BYP007-P4/3	CIE1-BYP070-P4/3	CIE1-BYP001-P4/3	CIE3R-BYP005-P4/3	CIE3R-BYP003-P4/3	CIE3R-BYP003-P4/3	CIE3R-BYP005-P4/3
SERVICE	6-FHEF-1	6-FHEF-2	6-FHEF-2	6-CHP-1	6-CHP-2	6-HHP-1	6-HHP-1	6-AHU-1A	6-AHU-1B	6-AHU-1C	6-AHU-1C	6-AHU-2A	6-AHU-2B
QTY. / LOCATION (INDOOR/OUTDOOR)	2 / OUTDOOR	2 / OUTDOOR	2 / OUTDOOR	1 / OUTDOOR	1 / OUTDOOR	1/ INDOOR	1/ INDOOR	2 / INDOOR	1 / INDOOR	1 / OUTDOOR	1 / OUTDOOR	4 / OUTDOOR	4 / OUTDOOR
ELECTRICAL													
MOTOR HP	20.0	7.5	0.25	10.0	10.0	5.0	5.0	6.0	1.0	4.0	3.0	3.0	4.0
MAX. MOTOR RPM	1,725	1,725	1,725	1,750	1,750	3,600	3,600	2140.0	3877.0	2460.0	4061.0	2058.0	2909.0
MOTOR VOLTAGE	460-3-60	460-3-60	460-3-60	460-3-60	460-3-60	460-3-60	460-3-60	460-3-60	460-3-60	460-3-60	460-3-60	460-3-60	460-3-60
OPTIONS													
WEATHER-PROOF ENCLOSURE	YES - NEMA 3R	YES - NEMA 3R	YES - NEMA 3R	YES - NEMA 3R	YES - NEMA 3R	YES	YES	YES	YES	YES - NEMA 3R	YES - NEMA 3R	YES - NEMA 3R	YES - NEMA 3R
INTEGRAL DISCONNECT	YES	YES	YES	YES	YES	YES	YES	YES	YES	YES	YES	YES	YES
INTEGRAL BYPASS	YES	YES	YES	YES	YES	YES	YES	YES	YES	YES	YES	YES	YES
BMS COMMUNICATION CARD	YES	YES	YES	YES	YES	YES	YES	YES	YES	YES	YES	YES	YES
NOTES:	1, 4, 5	1, 4, 5	1, 5	1, 2, 4, 5	1, 2, 4, 5	1, 3, 4	1, 3, 4	1, 4, 5	1, 5	1, 4, 5	1, 4, 5	1, 4, 5	1, 4, 5

NOTES/REMARKS:

1. PROVIDED CERUS FCS SERIES VARIABLE FREQUENCY DRIVES. DRIVES SHALL INCLUDE MANUAL 3-CONTACTOR BYPASS, CIRCUIT BREAKER DISCONNECT, HOA SWITCH, LINE REACTORS,5 YEAR WARRANTY AND AUTHORIZED FACTORY STARTUP. SEE VFD CONTROL DIAGRAM FOR ADDITIONAL DETAILS ON CONTROLS DRAWING.
2. VFD SHALL BE FACTORY MOUNTED AND WIRED AS A PART OF THE MULTISTACK MODULAR CHILLER PACKAGE AND CHILLED WATER PUMPS.
3. VFD SHALL BE FACTORY MOUNTED AND WIRED AS A PART OF THE SKID MOUNTED STEAM TO HEATING HOT WATER HEAT EXCHANGER PACKAGE UNIT.
4. PROVIDE VFD UNITS IN A NEMA3R ECNLOSURE WITH VENTILATION FAN.
5. COORDINATE ALL VFD PANEL LOCATIONS WITH ELECTRICAL AT FIELD. ENSURE THAT REQUIRED SERVICE CLEARANCE IS PROVIDED AS RECOMMENDED BY THE MANUFACTURER AND CODE.

SPLIT SYSTEM OUTDOOR AIR COOLED CONDENSING UNIT SCHEDULE

TAG	MANUFACTURER	MODEL	SERVICE	LOCATION	DESIGN AMBIENT AIR TEMP	ELECTRICAL CONNECTION MCA	MOCP	V/HZ/PH	SEER	OPERATING WEIGHT LBS.	FACTORY CHARGED REFRIGERANT	REMARKS
6-ACCU-1A1	MITSUBISHI	PUY-A24NHA3	6-FC-1A1	GRADE LEVEL	115°F	18	25	208/60/1	17	175	R410A	1, 2, 3
6-ACCU-1A2	MITSUBISHI	PUY-A24NHA3	6-FC-1A2	GRADE LEVEL	115°F	18	25	208/60/1	17	175	R410A	1, 2, 3
6-ACCU-2A1	MITSUBISHI	PUY-A36NHA4(-BS)	6-FC-2A1	HIGH ROOF	115°F	25	40	208/60/1	14.2	175	R410A	1, 2, 3
6-ACCU-2A2	MITSUBISHI	PUY-A36NHA4(-BS)	6-FC-2A2	HIGH ROOF	115°F	25	40	208/60/1	14.2	175	R410A	1, 2, 3
6-ACCU-2A3	MITSUBISHI	PUY-A36NHA3	6-FC-2A3	HIGH ROOF	115°F	25	30	208/60/1	14	175	R410A	1, 2, 3

NOTES:

1. PROVIDE CONDENSING UNIT WITH LOW AMBIENT CONTROLS FOR OPERATION AT 20 DEGREE F AMBIENT TEMPERATURE.
2. UNIT DISCONNECT BY ELECTRICAL DIV. 26.
3. MOUNT CONDENSING UNIT ON SLEEPERS ON ROOF. SEE MECHANICAL DETAIL 10/M505 FOR MOUNTING.

DUCTSOX DIFFUSER SCHEDULE FOR LABORATORY AREAS

FLOOR	ROOM #	AREA SERVED	TAG	QTY.	MIN. AIR FLOW	MAX. AIR FLOW	END INLET	TRAN. QTY.	D- DIA.	DIFFUSER LENGTH	FABRICK MATERIAL	COLOR	SUSPENSION	REMARKS
1	C129	MICROSCOPY	DSX1	1	140	250	8"	1	12"	5'	Rx	White	2R C□Track	1, 2, 3, 4
1	C141	FREEZERS	DSX2	1	240	370	8"	1	12"	9'	Rx	White	2R C□Track	1, 2, 3, 4
1	C143	OPEN LABS	DSX3	4	375	470	10"	4	12"	24'	Rx	White	2R C□Track	1, 2, 3, 4
1	C143A	TISSUE CULTURE	DSX4	1	560	820	12"	1	12"	19'	Rx	White	2R C□Track	1, 2, 3, 4
1	C144	CENTRIFUGES	DSX5	1	180	210	8"	1	12"	5'	Rx	White	2R C□Track	1, 2, 3, 4
1	C144A	FUME HOOD	DSX6	1	380	380	8"	1	12"	8'	Rx	White	2R C□Track	1, 2, 3, 4
2	C240	TISSUE CULTURE 1	DSX9	2	220	465	10"	2	12"	9'	Rx	White	2R C□Track	1, 2, 3, 4
2	C241	TISSUE CULTURE 2	DSX10	2	210	455	10"	2	12"	9'	Rx	White	2R C□Track	1, 2, 3, 4
2	C244	FUME HOOD	DSX11	1	830	830	14"	1	16"	10'	Rx	White	2R C□Track	1, 2, 3, 4
2	C245	FREEZER FARM	DSX12	2	200	200	8"	2	12"	5'	Rx	White	2R C□Track	1, 2, 3, 4
2	C246	EQUIPMENT/SUPPLIES	DSX13	2	160	960	12"	2	12"	9'	Rx	White	2R C□Track	1, 2, 3, 4
2	C247	MICROSCOPY	DSX14	1	150	260	8"	1	12"	5'	Rx	White	2R C□Track	1, 2, 3, 4
2	C248a	OPEN LAB - SW	DSX15	8	210	600	10"	8	12"	12'	Rx	White	2R C□Track	1, 2, 3, 4
2	C248b	OPEN LAB - NW	DSX16	8	210	300	8"	8	12"	12'	Rx	White	2R C□Track	1, 2, 3, 4
2	C248c	OPEN LAB - N	DSX17	6	290	420	10"	6	12"	19'	Rx	White	2R C□Track	1, 2, 3, 4
2	C250	TISSUE CULTURE SUPPORT	DSX18	2	160	595	10"	2	12"	9'	Rx	White	2R C□Track	1, 2, 3, 4
2	C251	FLEX LAB	DSX19	1	190	530	10"	1	12"	9'	Rx	White	2R C□Track	1, 2, 3, 4

NOTES:

1. ALL LABSOX DIFFUSERS SHALL START WITH A ROUND INLET WITH A TRANSITION TO HALF ROUND (D-SHAPE) DIFFUSER THAT ENDS WITH AN ENDCAP.
2. ALL LABSOX DIFFUSERS SHALL BE MADE FROM WHITE ANTIMICROBIAL FABRIC "Rx".
3. ALL LABSOX DIFFUSERS SHALL BE OF SURROUND FLOW AIR DISPERSION TYPE.
4. PROVIDE ALL LABSOX DIFFUSERS WITH 2 ROW ALUMINUM C-RACK, COUPLERS, END ANGLE BRACKETS AND ALL NECESSARY MOUNTING ACCESSORIES.

EXHAUST AIR FLOW CONTROL VALVE SCHEDULE

MARK	ROOM #	AREA SERVED	EXHAUST SYSTEM	EXHAUST VALVE TYPE	MANUFACTURER / MODEL	VALVE SIZE	QTY.	EXHAUST AIRFLOW, CFM MAX	EXHAUST AIRFLOW, CFM MIN	MIN. NEGATIVE PRESSURE AT DOWN STREAM OF VALVE (INCHES OF WATER)	CONTROL TYPE	REMARKS
EFCV 1-1	C129	MICROSCOPY	6-EF-A	VAV	PRICE VV	108	1	250	140	0.75	DDC	1, 2, 3
EFCV 1-2	C141	FREEZERS	6-EF-A	VAV	PRICE VV	108	1	370	240	0.75	DDC	1, 2, 3
EFCV 1-3	C143	OPEN LAB	6-EF-A	VAV	PRICE VV	210	1	1870	1490	0.75	DDC	1, 2, 3
EFCV 1-4	C143A	TISSUE CULTURE	6-EF-A	VAV	PRICE VV	112	1	1035	560	0.75	DDC	1, 2, 3, 4, 5
EFCV 1-5	C144	CENTRIFUGES	6-EF-A	VAV	PRICE VV	108	1	210	180	0.75	DDC	1, 2, 3
EFCV 1-6A	C144A	FUME HOOD	6-EF-A	VAV	PRICE VV	112	1	1000	190	0.75	DDC	1, 2, 3, 4, 5
EFCV 1-6B	C144A	FUME HOOD	6-EF-A	VAV	PRICE VV	112	1	1000	190	0.75	DDC	1, 2, 3, 4, 5
EFCV 1-7	--	CIRCULATION WEST	6-EF-A	VAV	PRICE VV	112	1	1200	1200	0.75	DDC	1, 2, 3
EFCV 2-1	C240	TISSUE CULTURE 2	6-EF-A	VAV	PRICE VV	112	1	1485	440	0.75	DDC	1, 2, 3, 4, 5
EFCV 2-2	C241	TISSUE CULTURE 2	6-EF-A	VAV	PRICE VV	112	1	2150	420	0.75	DDC	1, 2, 3, 4, 5
EFCV 2-3A	C244	FUME HOOD	6-EF-A	VAV	PRICE VV	112	1	1000	210	0.75	DDC	1, 2, 3, 4, 5
EFCV 2-3B	C244	FUME HOOD	6-EF-A	VAV	PRICE VV	112	1	1000	210	0.75	DDC	1, 2, 3, 4, 5
EFCV 2-3C	C244	FUME HOOD	6-EF-A	VAV	PRICE VV	112	1	1000	210	0.75	DDC	1, 2, 3, 4, 5
EFCV 2-3D	C244	FUME HOOD	6-EF-A	VAV	PRICE VV	112	1	1000	210	0.75	DDC	1, 2, 3, 4, 5
EFCV 2-4	C247	MICROSCOPY	6-EF-A	VAV	PRICE VV	108	1	260	150	0.75	DDC	1, 2, 3
EFCV 2-5	C250	TISSUE CULTURE SUPPORT	6-EF-A	VAV	PRICE VV	112	1	1190	320	0.75	DDC	1, 2, 3
EFCV 2-6	C251	FLEX LAB	6-EF-A	VAV	PRICE VV	108	1	530	190	0.75	DDC	1, 2, 3, 4, 5
EFCV 2-7	C243	FILM PROCESSING ROOM	6-EF-A	VAV	PRICE VV	108	1	80	50	0.75	DDC	1, 2, 3
EFCV 2-8	C248a-b	OPEN LABS - WEST	6-EF-B	VAV	PRICE VV	414	1	7200	3360	0.75	DDC	1, 2, 3
EFCV 2-9	C248c	OPEN LAB - NORTH	6-EF-B	VAV	PRICE VV	214	1	5680	3280	0.75	DDC	1, 2, 3

NOTES:

1. SEE PLANS FOR LEFT HAND OR RIGHT HAND FOR THE CONTROLS LOCATION. PROVIDE LOCATIONS OF THE CONTROL BOX ACCORDINGLY.
2. ALL CONTROLS SHALL BE PROVIDED BY CONTROLS CONTRACTOR. MECHANICAL CONTRACTOR SHALL COORDINATE WITH CONTROLS CONTRACTOR AS NECESSARY.
3. MOC SHALL BE - BODY: 14 GA. SPUN ALUMINUM, PLUNGER: 16 GA. SPUN ALUMINUM, SHAFT: 0.375" DIAMETER TEFLON-COATED STAINLESS STEEL, SHAFT SUPPORTS: STAINLESS STEEL,

FINAL BID DOCUMENTS

Revisions: Date

CONSULTANTS:

SYSKA HENNESSY GROUP
A member company of SH Group, Inc.

Syska Hennessy Group, Inc.
425 California Street
Suite 700
San Francisco, CA 94104
Tel: 415.288.9060
Fax: 415.835.0385
www.syska.com

REGISTERED PROFESSIONAL ENGINEER — PRASAD V. MORE — No. M35846 — Exp Mar 31,2014 — MECHANICAL — STATE OF CALIFORNIA

ARCHITECT/ENGINEERS:

ESTABLISHED 1988 HILLIARD ARCHITECTS GOING GREEN

HILLIARD ARCHITECTS, INC
251 Post Street, Suite 620
San Francisco, CA 94108-5017
Tel 415 989 6400, Fax 415 989 3056
www.HilliardArchitects.com

Drawing Title: **MECHANICAL SCHEDULES**

Approved: Project Director

Project Title: **VA PA BLDG 6 LAB RENOVATION**

Location: **VAPAHCS, PALO ALTO CAMPUS 3801 MIRANDA AVE. PALO ALTO, CA 94304**

Date: **04.17.2014** Checked: **PM** Drawn: **JP**

Project Number: **640-13-121P**

Building Number: **6**

Drawing Number: **M004**

Dwg. of

Office of Construction and Facilities Management

Department of Veterans Affairs

HILLIARD ARCHITECTS INC. COPYRIGHT

VA FORM 08-6231

AIR SEPARATOR SCHEDULE

MARK	LOCATION	SYSTEM AND/OR SERVICE	TYPE	AIR SEPARATOR SIZE IN IN	SIZE IN [mm]	FLOW GPM	FLOW [L/s]	WPD FT	WPD [kPa]	BUILT-IN STRAINER REQ'D	REMARKS
6-AS-1	OUTDOOR	BUILDING 6	FULL FLOW TANGENTIAL	4	[100]	215	[14]	0.9	[3]	YES	AS MANUFACTURED BY BELL & GOSSETT MODEL RL-4F. SEE NOTE 1
6-AS-2	C-128B	BUILDING 6	FULL FLOW TANGENTIAL	3	[75]	110	[7]	0.55	[2]	YES	AS MANUFACTURED BY BELL & GOSSETT MODEL RL-3F. SEE NOTE 2

NOTES:

1. OPERATING WEIGHT SHALL NOT EXCEED 300 LBS. MOUNT ON PIPE SUPPORT PER MECHANICAL DETAIL AND PROVIDE SEISMIC ANCHORAGE PER STRUCTURAL DRAWINGS.
2. OPERATING WEIGHT SHALL NOT EXCEED 200 LBS. PROVIDE AS A PART OF SKID MOUNTED HEATING HOT WATER HEAT EXCHANGER PACKAGE.

STEAM TO WATER HEAT EXCHANGER SCHEDULE

MARK	LOCATION	AREA AND/OR BLDG SERVED	SYSTEM AND/OR SERVICE	TYPE	WATER CONDITIONS FLOW GPM	FLOW [L/s]	EWT °F	EWT [°C]	LWT °F	LWT [°C]	WPD FT	WPD [kPa]	STEAM PRESSURE ENT CONTROL VALVE PSIG	ENT CONTROL VALVE [kPa]	ENT HEAT EXCHANGER PSIG	ENT HEAT EXCHANGER [kPa]	CONTROL VALVE LBS/HR	CONTROL VALVE [kg/HR]	TRAP TRAP #	TRAP CAPACITY LBS/HR	TRAP CAPACITY [kg/HR]	REMARKS
6-SWHX-1	C-128B	BIULDING 6 LABS	HEATING WATER	SHELL & TUBE	110	[7]	150	[66]	180	[82]	1.1	[3]	30	[210]	15	[100]	1707	[770]	1-TP2	3414	[1500]	AS MANUFACTURED BY FLOWTHERM SYSTEMS. SEE NOTES 1, 2.

NOTES:

1. PROVIDE FACTORY INSTALLED, WIRED AND TESTED SKID MOUNTED PACKAGE AS MANUFACTURED BY FLOWTHERM SYSTEMS COMPLETE WITH STEAM TO WATER HEAT EXCHANGERS, TWO HEATING HOT WATER PUMPS (ONE WORKING + ONE STAND BY), AIR SEPERATOR, EXPANSION TANK, STEAM TRAPS, CHEMICAL POT FEEDER, CONDENSATE WATER RETURN SYSTEM, CONTROL PANEL WITH NEEMA 4 ENCLOSURE INCLUDING ALL NECESSARY INTERCONNECTING PIPING, VALVES, CONTROLS, SENSORS ETC. REFER PIPING DIAGRAMS PROVIDED ON MECHANICAL DETAIL 6/M505 FOR ADDITIONAL REQUIREMENTS. REFER MECHANICAL SCHEDULES FOR REQUIREMENTS OF THE HEATING HOT WATER PUMPS, EXPANSION TANK ETC.
2. UNIT OPERATING WEIGHT SHALL NOT EXCEED 5800 LBS.

CLEAN STEAM GENERATOR SCHEDULE

MARK	LOCATION	AREA AND/OR BLDG SERVED	SYSTEM AND/OR SERVICE	TYPE	SOURCE OF MAKEUP	WATER CONDITIONS FLOW GPM	FLOW [L/s]	EWT °F	EWT [°C]	PRODUCED STEAM FLOW LBS/HR	PRODUCED STEAM FLOW kg/HR	PRODUCED STEAM PRESS PSIG	PRODUCED STEAM PRESS [kPa]	STEAM PRESSURE SOURCE STEAM PSIG	SOURCE STEAM [kPa]	CLEAN STEAM PSIG	CLEAN STEAM [kPa]	SOURCE STEAM CONTROL VALVE LBS/HR	SOURCE STEAM CONTROL VALVE [kg/HR]	TRAP TRAP #	TRAP # TRAPS	TRAP TOTAL CAPACITY LBS/HR	TRAP TOTAL CAPACITY [kg/HR]	REMARKS
6-SSHX-1	C-128B	BUILDING 6 LABS	HVAC HUMIDIFICATION	STEAM TO STEAM	RO + DI WATER	1.5	[0.1]	60	[16]	730	[330]	15	[100]	30	[210]	15	[100]	896	[410]	--	2	896	[410]	AS MANUFACTURED BY CEMLINE CORPORATION - MODEL V320USG1642. SEE NOTES 1, 2.

NOTES:

1. PROVIDE FACTORY INSTALLED, WIRED AND TESTED SKID, MOUNTED PACKAGE AS MANUFACTURED BY CEMLINE CORPORATION, COMPLETE WITH STEAM TO STEAM HEAT EXCHANGER, STEAM TRAPS, CONDENSATE WATER RETURN SYSTEM, ALL NECESSARY SAFETY VALVES & CONTROLS, CONTROL PANEL AND INCLUDING ALL NECESSARY INTERCONNECTING PIPING, VALVES, CONTROLS, SENSORS ETC. REFER PIPING DIAGRAMS PROVIDED ON MECHANICAL DETAILS DRAWINGS FOR ADDITIONAL REQUIREMENTS. PROVIDE UNIT WITH ALL NECESSARY CONTROL VALVES, CONTEOL DEVICES, SENSORS AND CONTROLLERS INCLUDING INTERFACE MODULE FOR COMMUNICATION WITH BMS SYSTEM. ALL CONTROLS SHALL BE SIEMENS MAKE.
2. STEAM GENERATOR VESSEL SHALL BE ASME CONSTRUCTED AND STAMPED. MATERIAL OF CONSTRUCTION OF HEAT EXCHANGER VESSEL, TUBES AND TUBE SHEET SHALL BE SS316. THE VESSEL DIMENSIONS SHALL BE 42" Ø X 60" HIGHT APPROXIMATE. THE ENTIRE VESSEL SHALL BE BE INSULATED WITH 3" FIBERGLASS INSULATION WITH 20 GA. ENAMELED STEEL JACKET. THE VESSEL SHALL BE MOUNTED VERTICALLY WITH OPERATING WEIGHT OF 3350 LBS.

EXPANSION TANK SCHEDULE

MARK	LOCATION	SYSTEM AND/OR SERVICE	TYPE	APPROX SYSTEM VOLUME GAL	APPROX SYSTEM VOLUME [L]	SYSTEM TEMPERATURE RANGE MIN °F	MIN [°C]	MAX °F	MAX [°C]	INITIAL PRESSURE IN TANK PSIG	INITIAL PRESSURE IN TANK [kPa]	MAX OPERATING PRESSURE PSIG	MAX OPERATING PRESSURE [kPa]	FILL PRESSURE AT TANK RELIEF VALVE PSIG	RELIEF VALVE [kPa]	AT TANK PSIG	AT TANK [kPa]	MIN VOLUME TANK GAL	MIN VOLUME TANK [L]	MIN BLADDER VOLUME GAL	MIN BLADDER VOLUME [L]	PIPE SIZE TO TANK IN	PIPE SIZE TO TANK [mm]	COLD WATER FILL SIZE IN	COLD WATER FILL SIZE [mm]	REMARKS
6-ET-1	OUTDOOR	BUILDING 6	VERT BLADDER	3000	[11000]	35	[2]	200	[93]	22	[150]	62	[430]	125	[860]	22	[150]	211	[800]	0	[ ]	4	[100]	1.25	[31]	AS MANUFACTURED BY BELL & GOSSETT MODEL B-500. SEE NOTE 1
6-ET-2	C-128B	BUILDING 6	VERT BLADDER	2500	[9500]	35	[2]	200	[93]	22	[150]	62	[430]	125	[860]	22	[150]	132	[500]	0	[ ]	3	[75]	1.25	[31]	AS MANUFACTURED BY BELL & GOSSETT MODEL B-400. SEE NOTE 1

NOTES:

1. OPERATING WEIGHT SHALL NOT EXCEED 1417 LBS. MOUNT ON A HOUSE KEEPING PAD AND PROVIDE SEISMIC ANCHORAGE PER STRUCTURAL DRAWINGS.
2. OPERATING WEIGHT SHALL NOT EXCEED 1184 LBS. PROVIDE AS A PART OF SKID MOUNTED HEATING HOT WATER HEAT EXCHANGER PACKAGE.

ROOM AIR BALANCE SCHEDULE

ROOM NO	ROOM NAME	AIR HANDLING UNIT NO	TERMINAL UNIT	INDIVIDUAL ROOM TEMP CONTROL	SUPPLY MAXIMUM ROOM AIR FLOW CFM	MAXIMUM ROOM AIR FLOW L/S	# OF AIR DEVICES	AIR DEVICE MARK	SUPPLY FAN	RETURN OR EXHAUST RETURN OR EXHAUST (R/E)	ROOM AIR FLOW CFM	ROOM AIR FLOW L/S	# OF AIR DEVICES	AIR DEVICE MARK	RETURN OR EXHAUST FAN	ROOM AIR FLOW TYPE CV	ROOM AIR FLOW TYPE VAV	ROOM AIR BALANCE	REMARKS
C129	MICROSCOPY	6-AHU-1A	AFCV 1-1	Y	250	[120]	1	DSX1	6-SF1A	E	250	[120]	1	RR-52	6-FHEF-01		VAV	0	THIS ROOM SHALL HAVE NEAUTRAL AIR BALANCE WITH RESPECT TO ADJOINING CIRCULATION AREA
C141	FREEZERS	6-AHU-1A	AFCV 1-2	Y	370	[170]	1	DSX2	6-SF1A	E	370	[170]	1	RR-53	6-FHEF-01		VAV	0	THIS ROOM SHALL HAVE NEAUTRAL AIR BALANCE WITH RESPECT TO ADJOINING CIRCULATION AREA
C143	OPEN LAB	6-AHU-1A	AFCV 1-3A	Y	935	[440]	2	DSX3	6-SF1A	E	935	[440]	1	RG-02	6-FHEF-01		VAV	0	THIS ROOM SHALL HAVE NEAUTRAL AIR BALANCE WITH RESPECT TO ADJOINING CIRCULATION AREA
C143	OPEN LAB	6-AHU-1A	AFCV 1-3B	Y	935	[440]	2	DSX3	6-SF1A	E	935	[440]					VAV	0	THIS ROOM SHALL HAVE NEAUTRAL AIR BALANCE WITH RESPECT TO ADJOINING CIRCULATION AREA
C143A	TISSUE CULTURE	6-AHU-1A	AFCV 1-4	Y	820	[390]	1	DSX4	6-SF1A	E	820	[390]	1	RGR-513	6-FHEF-01		VAV	- VE	SET DESIGN DIFFERENTIAL ROOM PRESSURE AT -VE 0.01 IN. WG. (2.5 Pa)
C144	CENTRIFUGES	6-AHU-1A	AFCV 1-5	Y	210	[99]	1	DSX5	6-SF1A	E	210	[99]	1	RR-51	6-FHEF-01		VAV	- VE	SET DESIGN DIFFERENTIAL ROOM PRESSURE AT -VE 0.01 IN. WG. (2.5 Pa)
C144A	FUME HOOD	6-AHU-1A	AFCV 1-6	Y	380	[180]	1	DSX6	6-SF1A	E	380	[180]	1	RR-53	6-FHEF-01		VAV	- VE	SET DESIGN DIFFERENTIAL ROOM PRESSURE AT -VE 0.02 IN. WG. (5.0 Pa)
--	CIRCULATION WEST	6-AHU-1A	AFCV 1-7	N	620	[290]	2	SD-13	6-SF1A	E	620	[290]	1	RR-513	6-FHEF-01		VAV	+ VE	SET DESIGN DIFFERENTIAL ROOM PRESSURE AT +VE 0.01 IN. WG. (2.5 Pa)
--	CIRCULATION EAST	6-AHU-1A	AFCV 1-8	Y	580	[270]	1	SD-15	6-SF1A	E	580	[270]					VAV	+ VE	SET DESIGN DIFFERENTIAL ROOM PRESSURE AT +VE 0.01 IN. WG. (2.5 Pa)
C124	(E) OFFICE	6-AHU-1B	TU 1-1	Y	130	[61]	1	SD-11	6-SF1B	R	130	[61]	1	RG-22	-		VAV	0	THIS ROOM SHALL HAVE NEAUTRAL AIR BALANCE WITH RESPECT TO ADJOINING CIRCULATION AREA
C125	(E) OFFICE	6-AHU-1B	TU 1-2	Y	130	[61]	1	SD-11	6-SF1B	R	130	[61]	1	RG-22	-		VAV	0	THIS ROOM SHALL HAVE NEAUTRAL AIR BALANCE WITH RESPECT TO ADJOINING CIRCULATION AREA
C126	(E) OFFICE	6-AHU-1B	TU 1-3	Y	130	[61]	1	SD-11	6-SF1B	R	130	[61]	1	RG-22	-		VAV	0	THIS ROOM SHALL HAVE NEAUTRAL AIR BALANCE WITH RESPECT TO ADJOINING CIRCULATION AREA
A154	(E) OFFICE	6-AHU-1B	TU 1-4	Y	110	[52]	1	SD-11	6-SF1B	R	110	[52]	1	RG-22	-		VAV	0	THIS ROOM SHALL HAVE NEAUTRAL AIR BALANCE WITH RESPECT TO ADJOINING CIRCULATION AREA
C130	(E) BREAKROOM	6-AHU-1C	TU 1-5	Y	280	[130]	1	SD-12	6-SF1C	R	280	[130]	1	RG-24	6-RF1C		VAV	- VE	SET DESIGN DIFFERENTIAL ROOM PRESSURE AT -VE 0.01 IN. WG. (2.5 Pa)
C131	(E) CONFERENCE ROOM	6-AHU-1C	TU 1-6	Y	680	[320]	2	SD-13	6-SF1C	R	680	[320]	1	RG-24	6-RF1C		VAV	0	THIS ROOM SHALL HAVE NEAUTRAL AIR BALANCE WITH RESPECT TO ADJOINING CIRCULATION AREA
C132	(E) OFFICE	6-AHU-1C	TU 1-7	Y	130	[61]	1	SD-11	6-SF1C	R	130	[61]	1	RG-22	6-RF1C		VAV	0	THIS ROOM SHALL HAVE NEAUTRAL AIR BALANCE WITH RESPECT TO ADJOINING CIRCULATION AREA
C133	(E) OFFICE	6-AHU-1C	TU 1-8	Y	130	[61]	1	SD-11	6-SF1C	R	130	[61]	1	RG-22	6-RF1C		VAV	0	THIS ROOM SHALL HAVE NEAUTRAL AIR BALANCE WITH RESPECT TO ADJOINING CIRCULATION AREA
C134	(E) OFFICE	6-AHU-1C	TU 1-9	Y	130	[61]	1	SD-11	6-SF1C	R	130	[61]	1	RG-22	6-RF1C		VAV	0	THIS ROOM SHALL HAVE NEAUTRAL AIR BALANCE WITH RESPECT TO ADJOINING CIRCULATION AREA
C135	(E) OFFICE	6-AHU-1C	TU 1-10	Y	170	[80]	1	SD-12	6-SF1C	R	170	[80]	1	RG-23	6-RF1C		VAV	0	THIS ROOM SHALL HAVE NEAUTRAL AIR BALANCE WITH RESPECT TO ADJOINING CIRCULATION AREA
C136	WORK ROOM	6-AHU-1C	TU 1-11	Y	110	[52]	1	SD-11	6-SF1C	R	110	[52]	1	RG-22	6-RF1C		VAV	0	THIS ROOM SHALL HAVE NEAUTRAL AIR BALANCE
C137, C138	WORK ROOM	6-AHU-1C	TU 1-12	Y	160	[76]	2	SD-12	6-SF1C	R	160	[76]	1	RG-23	6-RF1C		VAV	0	THIS ROOM SHALL HAVE NEAUTRAL AIR BALANCE
C139	COMPUTATION / OPEN OFFICE	6-AHU-1C	TU 1-13	Y	1670	[790]	4	SD-14	6-SF1C	R	1670	[790]	4	RG-25	6-RF1C		VAV	0	THIS ROOM SHALL HAVE NEAUTRAL AIR BALANCE
C140	STAFF LOUNGE	6-AHU-1C	TU 1-14	Y	400	[190]	2	SD-13	6-SF1C	R	400	[190]	1	RG-25	6-RF1C		VAV	0	THIS ROOM SHALL HAVE NEAUTRAL AIR BALANCE
C240	TISSUE CULTURE 1	6-AHU-2A	AFCV 2-1	Y	930	[440]	2	DSX9	6-SF2A	E	930	[440]	1	RR-513	6-FHEF-01		VAV	- VE	SET DESIGN DIFFERENTIAL ROOM PRESSURE AT -VE 0.01 IN. WG. (2.5 Pa)
C241	TISSUE CULTURE 2	6-AHU-2A	AFCV 2-2	Y	910	[430]	2	DSX10	6-SF2A	E	910	[430]	1	RR-513	6-FHEF-01		VAV	- VE	SET DESIGN DIFFERENTIAL ROOM PRESSURE AT -VE 0.01 IN. WG. (2.5 Pa)
C242	STORAGE	6-AHU-2A	AFCV 2-3	Y	80	[38]	1	SD-51	6-SF2A	E	80	[38]	NA	NA	6-FHEF-01		VAV	0	DOOR UNDERCUT
C243	FIRM PROCESSING	6-AHU-2A	AFCV 2-4	Y	80	[38]	1	SD-51	6-SF2A	E	80	[38]	NA	NA	6-FHEF-01		VAV	- VE	SET DESIGN DIFFERENTIAL ROOM PRESSURE AT -VE 0.01 IN. WG. (2.5 Pa)
C244	FUME HOOD	6-AHU-2A	AFCV 2-5	Y	830	[390]	1	DSX11	6-SF2A	E	830	[390]	1	RR-513	6-FHEF-01		VAV	- VE	SET DESIGN DIFFERENTIAL ROOM PRESSURE AT -VE 0.02 IN. WG. (5.0 Pa)
C245	FREEZER FARM	6-AHU-2A	AFCV 2-6A	Y	200	[94]	1	DSX12	6-SF2A	E	200	[94]	NA	NA	6-FHEF-02		VAV	0	THIS ROOM SHALL HAVE NEAUTRAL AIR BALANCE WITH RESPECT TO ADJOINING CIRCULATION AREA. EXHAUST IS ACHIEVED BY OPEN LAB EXHAUST VALVE EFCV 2-8
C245	FREEZER FARM	6-AHU-2A	AFCV 2-6B	Y	200	[94]	1	DSX12	6-SF2A	E	200	[94]	NA	NA	6-FHEF-02		VAV	0	THIS ROOM SHALL HAVE NEAUTRAL AIR BALANCE WITH RESPECT TO ADJOINING CIRCULATION AREA. EXHAUST IS ACHIEVED BY OPEN LAB EXHAUST VALVE EFCV 2-8
C246	EQUIPMENT SUPPLIES	6-AHU-2A	AFCV 2-7A	Y	960	[450]	1	DSX13	6-SF2A	E	960	[450]	NA	NA	6-FHEF-02		VAV	0	THIS ROOM SHALL HAVE NEAUTRAL AIR BALANCE WITH RESPECT TO ADJOINING CIRCULATION AREA. EXHAUST IS ACHIEVED BY OPEN LAB EXHAUST VALVE EFCV 2-8
C246	EQUIPMENT SUPPLIES	6-AHU-2A	AFCV 2-7B	Y	960	[450]	1	DSX13	6-SF2A	E	960	[450]	NA	NA	6-FHEF-02		VAV	0	THIS ROOM SHALL HAVE NEAUTRAL AIR BALANCE WITH RESPECT TO ADJOINING CIRCULATION AREA. EXHAUST IS ACHIEVED BY OPEN LAB EXHAUST VALVE EFCV 2-8
C247	MICROSCOPY	6-AHU-2A	AFCV 2-8	Y	260	[120]	1	DSX14	6-SF2A	E	260	[120]	1	RR-52	6-FHEF-02		VAV	0	THIS ROOM SHALL HAVE NEAUTRAL AIR BALANCE
C250	TISSUE CULTURE SUPPORT	6-AHU-2A	AFCV 2-9	Y	1190	[560]	2	DSX18	6-SF2A	E	1190	[560]	1	RR-513	6-FHEF-01		VAV	- VE	SET DESIGN DIFFERENTIAL ROOM PRESSURE AT -VE 0.01 IN. WG. (2.5 Pa)
C251	FLEX LAB	6-AHU-2A	AFCV 2-10	Y	530	[250]	1	DSX19	6-SF2A	E	530	[250]	1	RR-54	6-FHEF-01		VAV	- VE	SET DESIGN DIFFERENTIAL ROOM PRESSURE AT -VE 0.01 IN. WG. (2.5 Pa)
--	CIRCULATION EAST	6-AHU-2A	AFCV 2-11A	Y	330	[160]	1	SD-14	6-SF2A	E	330	[160]	NA	NA	6-FHEF-02		VAV	+ VE	EXHAUST IS ACHIEVED BY OPEN LAB EXHAUST VALVE EFCV 2-8
--	CIRCULATION EAST	6-AHU-2A	AFCV 2-11B	Y	330	[160]	1	SD-14	6-SF2A	E	330	[160]	NA	NA	6-FHEF-02		VAV	+ VE	EXHAUST IS ACHIEVED BY OPEN LAB EXHAUST VALVE EFCV 2-8
C248a	OPEN LAB - SOUTH WEST	6-AHU-2B	AFCV 2-12A	Y	1200	[570]	2	DSX15	6-SF2B	E	1200	[570]	1	RG-01	6-FHEF-02		VAV	0	THIS ROOM SHALL HAVE NEAUTRAL AIR BALANCE WITH RESPECT TO ADJOINING CIRCULATION AREA
C248a	OPEN LAB - SOUTH WEST	6-AHU-2B	AFCV 2-12B	Y	1200	[570]	2	DSX15	6-SF2B	E	1200	[570]					VAV	0	THIS ROOM SHALL HAVE NEAUTRAL AIR BALANCE WITH RESPECT TO ADJOINING CIRCULATION AREA
C248a	OPEN LAB - SOUTH WEST	6-AHU-2B	AFCV 2-12C	Y	1200	[570]	2	DSX15	6-SF2B	E	1200	[570]					VAV	0	THIS ROOM SHALL HAVE NEAUTRAL AIR BALANCE WITH RESPECT TO ADJOINING CIRCULATION AREA
C248a	OPEN LAB - SOUTH WEST	6-AHU-2B	AFCV 2-12D	Y	1200	[570]	2	DSX15	6-SF2B	E	1200	[570]					VAV	0	THIS ROOM SHALL HAVE NEAUTRAL AIR BALANCE WITH RESPECT TO ADJOINING CIRCULATION AREA
C248b	OPEN LAB - NORTH WEST	6-AHU-2B	AFCV 2-13A	Y	600	[280]	2	DSX16	6-SF2B	E	600	[280]	1	RG-02	6-FHEF-02		VAV	0	THIS ROOM SHALL HAVE NEAUTRAL AIR BALANCE WITH RESPECT TO ADJOINING CIRCULATION AREA
C248b	OPEN LAB - NORTH WEST	6-AHU-2B	AFCV 2-13B	Y	600	[280]	2	DSX16	6-SF2B	E	600	[280]					VAV	0	THIS ROOM SHALL HAVE NEAUTRAL AIR BALANCE WITH RESPECT TO ADJOINING CIRCULATION AREA
C248b	OPEN LAB - NORTH WEST	6-AHU-2B	AFCV 2-13C	Y	600	[280]	2	DSX16	6-SF2B	E	600	[280]					VAV	0	THIS ROOM SHALL HAVE NEAUTRAL AIR BALANCE WITH RESPECT TO ADJOINING CIRCULATION AREA
C248b	OPEN LAB - NORTH WEST	6-AHU-2B	AFCV 2-13D	Y	600	[280]	2	DSX16	6-SF2B	E	600	[280]					VAV	0	THIS ROOM SHALL HAVE NEAUTRAL AIR BALANCE WITH RESPECT TO ADJOINING CIRCULATION AREA
C248c	OPEN LAB - NORTH	6-AHU-2B	AFCV 2-14A	Y	1250	[590]	3	DSX17	6-SF2B	E	1250	[590]	1	RG-03	6-FHEF-02		VAV	0	THIS ROOM SHALL HAVE NEAUTRAL AIR BALANCE WITH RESPECT TO ADJOINING CIRCULATION AREA. EXHAUST IS ACHIEVED BY OPEN LAB EXHAUST VALVE EFCV 2-8
C248c	OPEN LAB - NORTH	6-AHU-2B	AFCV 2-14B	Y	1250	[590]	3	DSX17	6-SF2B	E	1250	[590]					VAV	0	

NOTE

1. ALL LAB ZONES SHALL HAVE DIFFERNTIAL ROOM PRESSURE SENSORS AND A WALL MOUNTED DISPLAY MODULE. ROOMS OR AREAS SHALL NOT HAVE INDIVIDUAL HUMIDITY CONTROL UNLESS NOTED.
2. CONTROLS CONTRACTOR AND AIR BALANCING CONTRACTOR SHALL COORDINATE AND WORK TOGETHER TO ADJUST THE DIFFERENCE BETWEEN THE SUPPLY AND EXHAUST AIR FLOWS TO ACHIEVE REQUIRED ROOM DIFFERENTIAL PRESSURE SETTINGS. REFER SCHEMATIC AIR FLOW DIAGRAM ON SHEET M604.

FINAL BID DOCUMENTS

HILLIARD ARCHITECTS INC. COPYRIGHT

Revisions: Date

CONSULTANTS:

SYSKA HENNESSY GROUP
A member company of SH Group, Inc.

Syska Hennessy Group, Inc.
425 California Street
Suite 700
San Francisco, CA 94104
Tel: 415.288.9060
Fax: 415.835.0385
www.syska.com

REGISTERED PROFESSIONAL ENGINEER PRASAD V. MONE No. M35846 Exp.Mar.31,2014 MECHANICAL STATE OF CALIFORNIA

ARCHITECT/ENGINEERS:

ESTABLISHED 1988 HILLIARD ARCHITECTS GOING GREEN

HILLIARD ARCHITECTS, INC
251 Post Street, Suite 620
San Francisco, CA 94108-5017
Tel 415 989 6400, Fax 415 989 3056
www.HilliardArchitects.com

Drawing Title: **MECHANICAL SCHEDULES**

Approved: Project Director

Project Title: **VA PA BLDG 6 LAB RENOVATION**

Location: VAPAHCS, PALO ALTO CAMPUS, 3801 MIRANDA AVE. PALO ALTO, CA 94304

Date: 04.17.2014 | Checked: PM | Drawn: JP

Project Number: 640-13-121P

Building Number: 6

Drawing Number: M005

Dwg. of

Office of Construction and Facilities Management

Department of Veterans Affairs

VA FORM 08-6231

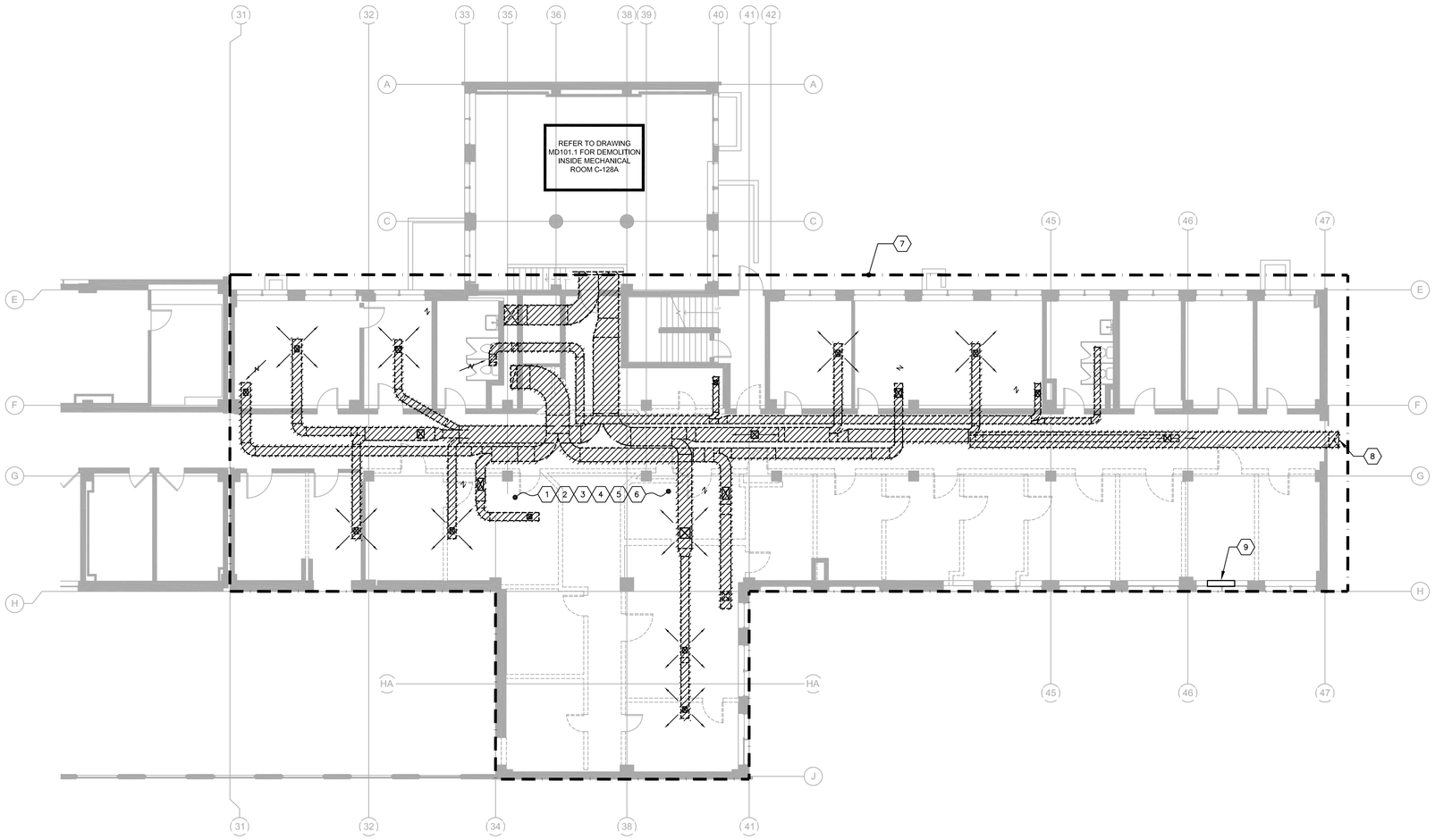

SHEET NOTES

1. FIELD VERIFY (E) CONDITIONS PRIOR TO COMMENCEMENT OF WORK. NOTIFY ENGINEER OF ANY DISCREPANCIES.
2. MECHANICAL CONTRACTOR SHALL COORDINATE WITH VA PROJECT MANAGER/ BUILDING FACILITY ENGINEER TO GET NECESSARY PERMIT TO ISOLATE (E) MECHANICAL SERVICES PRIOR TO COMMENCEMENT OF ANY MECHANICAL DEMOLITION WORK INDICATED ON THIS DRAWING.
3. MECHANICAL CONTRACTOR SHALL BE RESPONSIBLE TO PROTECT ALL (E) BUILDING SERVICES, (E) BUILDING STRUCTURE & ARCHITECTURAL ELEMENTS ETC. DURING THE ENTIRE PERIOD OF MECHANICAL DEMOLITION WORK.
4. LOCATIONS OF EXISTING HVAC EQUIPMENT, DUCTS, PIPING ETC. ARE APPROXIMATE AND ARE INDICATED FOR REFERENCE ONLY. EXACT LOCATIONS AND ELEVATIONS SHALL BE VERIFIED IN THE FIELD AND COORDINATED WITH OTHER NEW & EXISTING EQUIPMENT/SERVICES/EXISTING BUILDING STRUCTURE AND NEW WORK PLATFORM STEEL STRUCTURE.
5. CAP AND SEAL ANY DUCTWORK/PIPING DUE TO DEMOLITION WORK THAT WILL BE REMAINING AS IS.
6. CONTRACTOR SHALL FIELD VERIFY OPERATION AND FUNCTIONING OF ALL (E) CONTROLS, VALVES AND DEVICES AND SHALL REPLACE ALL (E) FAULTY CONTROLS, VALVES AND DEVICES WITH NEW WHICH WILL BE REUSED IN THE NEW HAVC SYSTEM.

KEY NOTES

1. DEMO (E) SUPPLY AIR DUCTWORK, DUCT ACCESSORIES, INCLUDING ALL HANGERS & SUPPORTS.
2. DEMO (E) RETURN/EXHAUST AIR DUCTWORK, DUCT ACCESSORIES, INCLUDING ALL HANGERS & SUPPORTS.
3. DEMO (E) COMBINATION FIRE SMOKE DAMPERS/FIRE DAMPERS AND ASSOCIATED CONTROLS.
4. (E) WALL MOUNTED HEATERS WITH PIPING CONNECTIONS, ASSOCIATED VALVES AND ACCESSORIES TO BE ABANDONED IN PLACE.
5. (E) STEAM SUPPLY AND CONDENSATE RETURN PIPING CONCEALED INSIDE THE WALL TO BE ABANDONED IN PLACE.
6. DEMO (E) CEILING DIFFUSERS AND GRILLES.
7. FIELD VERIFY AND DEMOLISH ALL (E) HVAC SYSTEM THAT IS SERVING FIRST FLOOR OF UNIT C INDICATED BY THIS BORDER. DEMOLISH ALL (E) WALL HEATERS THAT ARE INSTALLED ON INTERIOR PARTITIONS/WALLS. DISCONNECT HHW S&R PIPING CONNECTIONS ALONG WITH CONTROL VALVE AND CAP HHW S&R PIPING INSIDE THE FLOOR. DEMO ALL CONTROL WIRING AND ASSOCIATED THERMOSTAT CONTROLS (TYPICAL FOR ALL). ALL MECHANICAL AND PLUMBING WORK SERVING THIRD FLOOR OF THIS BUILDING SHALL REMAIN AS IS. COORDINATE ALL DEMOLITION WORK WITH VA FACILITY ENGINEERS BEFORE PROCEEDING ANY DEMOLITION WORK.
8. DEMOLISH (E) EXHAUST DUCT RISER RUNNING INSIDE THE ARCHITECTURAL SHEET METAL ENCLOSURE UP TO THE ROOF. COORDINATE WITH GENERAL CONTRACTOR TO REMOVE THE ARCHITECTURAL ENCLOSURE TO FACILITATE DEMOLITION WORK.
9. ABANDON EXISTING WALL HEATERS IN PLACE. DISCONNECT HHW S&R PIPING CONNECTIONS ALONG WITH CONTROL VALVE AND CAP HHW S&R PIPING INSIDE THE WALL. DEMO ALL CONTROL WIRING AND ASSOCIATED THERMOSTAT CONTROLS (TYPICAL FOR ALL).

01 MECHANICAL DEMOLITION 1ST FLOOR PLAN
SCALE: 1/8" = 1'-0"

0' 8' 16' 32' NORTH

FINAL BID DOCUMENTS

HILLIARD ARCHITECTS INC. COPYRIGHT 2008

Revisions:	Date
ISSUED AS 60% PROGRESS SET	11.01.2013

CONSULTANTS:

SYSKA HENNESSY GROUP
A member company of SH Group, Inc.
Syska Hennessy Group, Inc.
425 California Street
Suite 700
San Francisco, CA 94104
Tel: 415.288.9060
Fax: 415.835.0385
www.syska.com

REGISTERED PROFESSIONAL ENGINEER PRASAD V. MORE No. M35846 Exp.Mar.31,2014 MECHANICAL STATE OF CALIFORNIA

ARCHITECT/ENGINEERS:

ESTABLISHED 1988 HILLIARD ARCHITECTS GOING GREEN
HILLIARD ARCHITECTS, INC
251 Post Street, Suite 620
San Francisco, CA 94108-5017
Tel 415 989 6400, Fax 415 989 3056
www.HilliardArchitects.com

Drawing Title: MECHANICAL DEMOLITION 1ST FLOOR PLAN

Approved: Project Director

Project Title: VA PA BLDG 6 LAB RENOVATION

Location: VAPAHCS - PALO ALTO CAMPUS, 3801 MIRANDA AVE, PALO ALTO, CA 94304

Date: 04.17.2014 | Checked: PVM | Drawn: RB

Project Number: 640-13-121P

Building Number: 6

Drawing Number: MD101

Dwg. 2 of 11

Office of Construction and Facilities Management

Department of Veterans Affairs

VA FORM 08-6231

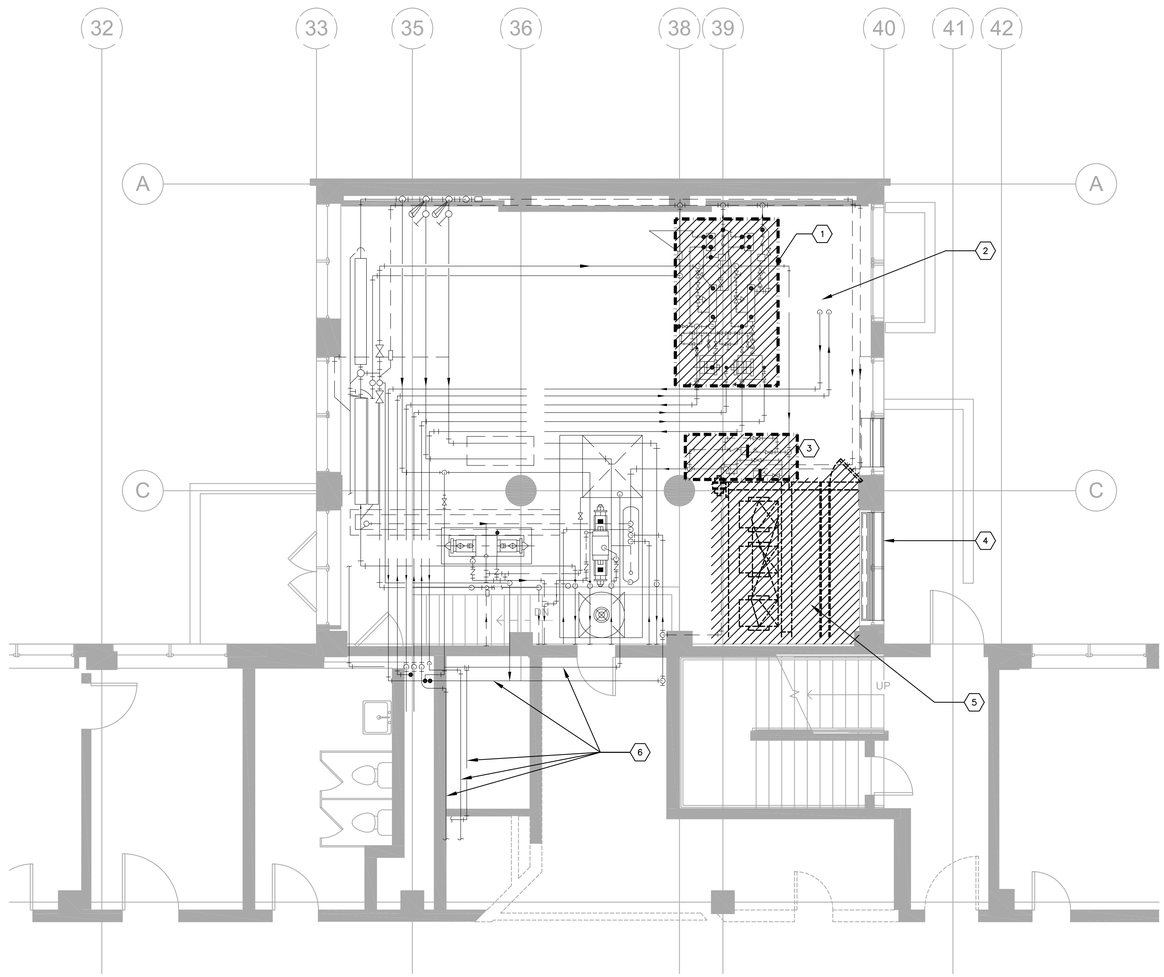

01 MECHANICAL DEMOLITION ENLARGED PLAN - 1ST FLOOR
SCALE: 1/4" = 1'-0"

SHEET NOTES

1. FIELD VERIFY (E) CONDITIONS PRIOR TO COMMENCEMENT OF WORK. NOTIFY ENGINEER OF ANY DISCREPANCIES.
2. MECHANICAL CONTRACTOR SHALL COORDINATE WITH VA PROJECT MANAGER/ BUILDING FACILITY ENGINEER TO GET NECESSARY PERMIT TO ISOLATE (E) MECHANICAL SERVICES PRIOR TO COMMENCEMENT OF ANY MECHANICAL DEMOLITION WORK INDICATED ON THIS DRAWING.
3. MECHANICAL CONTRACTOR SHALL BE RESPONSIBLE TO PROTECT ALL (E) BUILDING SERVICES, (E) BUILDING STRUCTURE & ARCHITECTURAL ELEMENTS ETC. DURING THE ENTIRE PERIOD OF MECHANICAL DEMOLITION WORK.
4. LOCATIONS OF EXISTING HVAC EQUIPMENT, DUCTS, PIPING ETC. ARE APPROXIMATE AND ARE INDICATED FOR REFERENCE ONLY. EXACT LOCATIONS AND ELEVATIONS SHALL BE VERIFIED IN THE FIELD AND COORDINATED WITH OTHER NEW & EXISTING EQUIPMENT/SERVICES/EXISTING BUILDING STRUCTURE AND NEW WORK PLATFORM STEEL STRUCTURE.
5. CAP AND SEAL ANY DUCTWORK/PIPING DUE TO DEMOLITION WORK THAT WILL BE REMAINING AS IS.
6. CONTRACTOR SHALL FIELD VERIFY OPERATION AND FUNCTIONING OF ALL (E) CONTROLS, VALVES AND DEVICES AND SHALL REPLACE ALL (E) FAULTY CONTROLS, VALVES AND DEVICES WITH NEW WHICH WILL BE REUSED IN THE NEW HAVC SYSTEM.

KEY NOTES

1. DEMO (E) STEAM TO WATER HEAT EXCHANGER SYSTEMS, ASSOCIATED PUMPS ALONG WITH ASSOCIATED STEAM PIPING AND HHW S&R PIPING, CONTROLS, WIRING ETC. DEMO PIPING BACK UP TO THE MAIN HEADERS AND BLANK OFF THE BRANCH PIPES. FIELD VERIFY AND COORDINATE WITH VA OFFICIALS TO FINALIZE THE EXACT POINT OF DEMOLITION.
2. (E) HEATING HOT WATER PIPING, PUMPS AND ACCESSORIES ARE IN USE AND SHALL REMAIN AS IS.
3. DEMO STEAM, CHW S&R AND HHW S&R PIPING CONNECTIONS TO AHU BACK UP TO THE MAIN HEADERS AND BLANK OFF THE BRANCH PIPES. FIELD VERIFY & COORDINATE WITH VA OFFICIALS TO FINALIZE THE EXACT POINT OF DEMOLITION.
4. (E) OUTSIDE AIR INTAKE WALL LOUVER TO REMAIN AS IS AND TO BE REUSED. CAREFULLY CLEAN THE ENTIRE LOUVER SURFACES FROM INTERIOR & EXTERIOR WITH APPROVED CLEANER.
5. DEMOLISH (E) AIR HANDLING UNIT AND ALL ASSOCIATED DUCTWORK, WIRING, CONTROLS & ACCESSORIES.
6. FIELD VERIFY (E) PIPE WORK. COORDINATE WITH VA OFFICIALS AND DEMOLISH (E) PIPING IF NOT IN USE OR REROUTE TO AVOID CONFLICTS AND FACILITATE NEW WORK.

0' 4' 8' 16' NORTH

FINAL BID DOCUMENTS

ISSUED AS 60% PROGRESS SET	11.01.2013
Revisions:	Date

CONSULTANTS:

SYSKA HENNESSY GROUP
A member company of SH Group, Inc.

Syska Hennessy Group, Inc.
425 California Street
Suite 700
San Francisco, CA 94104
Tel: 415.288.9060
Fax: 415.835.0385
www.syska.com

REGISTERED PROFESSIONAL ENGINEER
PRASAD V. MORE
No. M35846
Exp.Mar.31,2014
MECHANICAL
STATE OF CALIFORNIA

ARCHITECT/ENGINEERS:

ESTABLISHED 1988 HILLIARD ARCHITECTS GOING GREEN

HILLIARD ARCHITECTS, INC
251 Post Street, Suite 620
San Francisco, CA 94108-5017
Tel 415 989 6400, Fax 415 989 3056
www.HilliardArchitects.com

Drawing Title: **MECHANICAL DEMOLITION 1ST FLOOR ENLARGED PLAN**

Approved: Project Director

Project Title: **VA PA BLDG 6 LAB RENOVATION**

Location: VAPAHCS - PALO ALTO CAMPUS, 3801 MIRANDA AVE, PALO ALTO, CA 94304

Date: 04.17.2014 | Checked: PVM | Drawn: RB

Project Number: 640-13-121P

Building Number: 6

Drawing Number: MD101.1

Dwg. 2 of 11

Office of Construction and Facilities Management

Department of Veterans Affairs

HILLIARD ARCHITECTS INC. COPYRIGHT 2008

VA FORM 08-6231

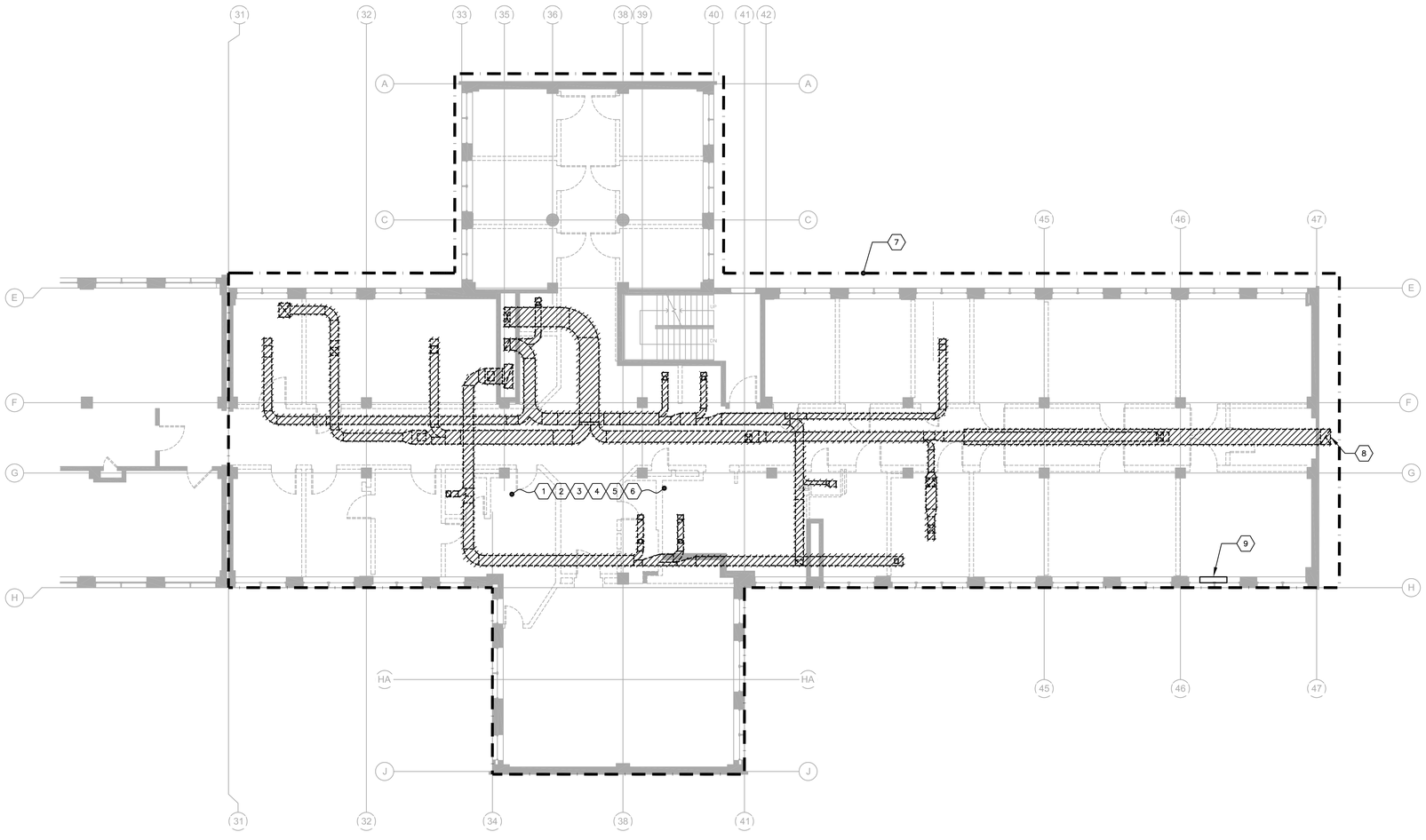

SHEET NOTES

1. FIELD VERIFY (E) CONDITIONS PRIOR TO COMMENCEMENT OF WORK. NOTIFY ENGINEER OF ANY DISCREPANCIES.
2. MECHANICAL CONTRACTOR SHALL COORDINATE WITH VA PROJECT MANAGER/ BUILDING FACILITY ENGINEER TO GET NECESSARY PERMIT TO ISOLATE (E) MECHANICAL SERVICES PRIOR TO COMMENCEMENT OF ANY MECHANICAL DEMOLITION WORK INDICATED ON THIS DRAWING.
3. MECHANICAL CONTRACTOR SHALL BE RESPONSIBLE TO PROTECT ALL (E) BUILDING SERVICES, (E) BUILDING STRUCTURE & ARCHITECTURAL ELEMENTS ETC. DURING THE ENTIRE PERIOD OF MECHANICAL DEMOLITION WORK.
4. LOCATIONS OF EXISTING HVAC EQUIPMENT, DUCTS, PIPING ETC. ARE APPROXIMATE AND ARE INDICATED FOR REFERENCE ONLY. EXACT LOCATIONS AND ELEVATIONS SHALL BE VERIFIED IN THE FIELD AND COORDINATED WITH OTHER NEW & EXISTING EQUIPMENT/SERVICES/EXISTING BUILDING STRUCTURE AND NEW WORK PLATFORM STEEL STRUCTURE.
5. CAP AND SEAL ANY DUCTWORK/PIPING DUE TO DEMOLITION WORK THAT WILL BE REMAINING AS IS.
6. CONTRACTOR SHALL FIELD VERIFY OPERATION AND FUNCTIONING OF ALL (E) CONTROLS, VALVES AND DEVICES AND SHALL REPLACE ALL (E) FAULTY CONTROLS, VALVES AND DEVICES WITH NEW WHICH WILL BE REUSED IN THE NEW HVAC SYSTEM.

ⓧ KEY NOTES

1. DEMO (E) SUPPLY AIR DUCTWORK, DUCT ACCESSORIES, INCLUDING ALL HANGERS & SUPPORTS.
2. DEMO (E) RETURN/EXHAUST AIR DUCTWORK, DUCT ACCESSORIES, INCLUDING ALL HANGERS & SUPPORTS.
3. DEMO (E) COMBINATION FIRE SMOKE DAMPERS/FIRE DAMPERS AND ASSOCIATED CONTROLS.
4. (E) WALL MOUNTED HEATERS WITH PIPING CONNECTIONS, ASSOCIATED VALVES AND ACCESSORIES TO BE ABANDONED IN PLACE.
5. (E) STEAM SUPPLY AND CONDENSATE RETURN PIPING CONCEALED INSIDE THE WALL TO BE ABANDONED IN PLACE.
6. DEMO (E) CEILING DIFFUSERS AND GRILLES.
7. FIELD VERIFY AND DEMOLISH ALL (E) HVAC SYSTEM THAT IS SERVING SECOND FLOOR OF UNIT C INDICATED BY THIS BORDER. DEMOLISH ALL (E) WALL HEATERS THAT ARE INSTALLED ON INTERIOR PARTITIONS/WALLS. DISCONNECT HHW S&R PIPING CONNECTIONS ALONG WITH CONTROL VALVE AND CAP HHW S&R PIPING INSIDE THE FLOOR. DEMO ALL CONTROL WIRING AND ASSOCIATED THERMOSTAT CONTROLS (TYPICAL FOR ALL). ALL MECHANICAL AND PLUMBING WORK SERVING THIRD FLOOR OF THIS BUILDING SHALL REMAIN AS IS. COORDINATE ALL DEMOLITION WORK WITH VA FACILITY ENGINEERS BEFORE PROCEEDING ANY DEMOLITION WORK.
8. DEMOLISH (E) EXHAUST DUCT RISER RUNNING INSIDE THE ARCHITECTURAL SHEET METAL ENCLOSURE UP TO THE ROOF. COORDINATE WITH GENERAL CONTRACTOR TO REMOVE THE ARCHITECTURAL ENCLOSURE TO FACILITATE DEMOLITION WORK.
9. ABANDON EXISTING WALL HEATERS IN PLACE. DISCONNECT HHW S&R PIPING CONNECTIONS ALONG WITH CONTROL VALVE AND CAP HHW S&R PIPING INSIDE THE WALL. DEMO ALL CONTROL WIRING AND ASSOCIATED THERMOSTAT CONTROLS (TYPICAL FOR ALL).

01 MECHANICAL DEMOLITION 2ND FLOOR PLAN
SCALE: 1/8" = 1'-0"

0' 8' 16' 32' NORTH

FINAL BID DOCUMENTS

HILLIARD ARCHITECTS INC. COPYRIGHT 2008

Revisions:	Date
ISSUED AS 60% PROGRESS SET	11.01.2013

CONSULTANTS:

SYSKA HENNESSY GROUP
A member company of SH Group, Inc.
Syska Hennessy Group, Inc.
425 California Street
Suite 700
San Francisco, CA 94104
Tel: 415.288.9060
Fax: 415.835.0385
www.syska.com

REGISTERED PROFESSIONAL ENGINEER PRASAD V. MORE No. M35846 Exp.Mar.31,2014 MECHANICAL STATE OF CALIFORNIA

ARCHITECT/ENGINEERS:

ESTABLISHED 1988 HILLIARD ARCHITECTS GOING GREEN
HILLIARD ARCHITECTS, INC
251 Post Street, Suite 620
San Francisco, CA 94108-5017
Tel 415 989 6400, Fax 415 989 3056
www.HilliardArchitects.com

Drawing Title: MECHANICAL DEMOLITION 2ND FLOOR PLAN

Approved: Project Director

Project Title: VA PA BLDG 6 LAB RENOVATION

Location: VAPAHCS - PALO ALTO CAMPUS, 3801 MIRANDA AVE, PALO ALTO, CA 94304

Date: 04.17.2014 | Checked: PVM | Drawn: RB

Project Number: 640-13-121P

Building Number: 6

Drawing Number: MD102

Dwg. 3 of 11

Office of Construction and Facilities Management

Department of Veterans Affairs

VA FORM 08-6231

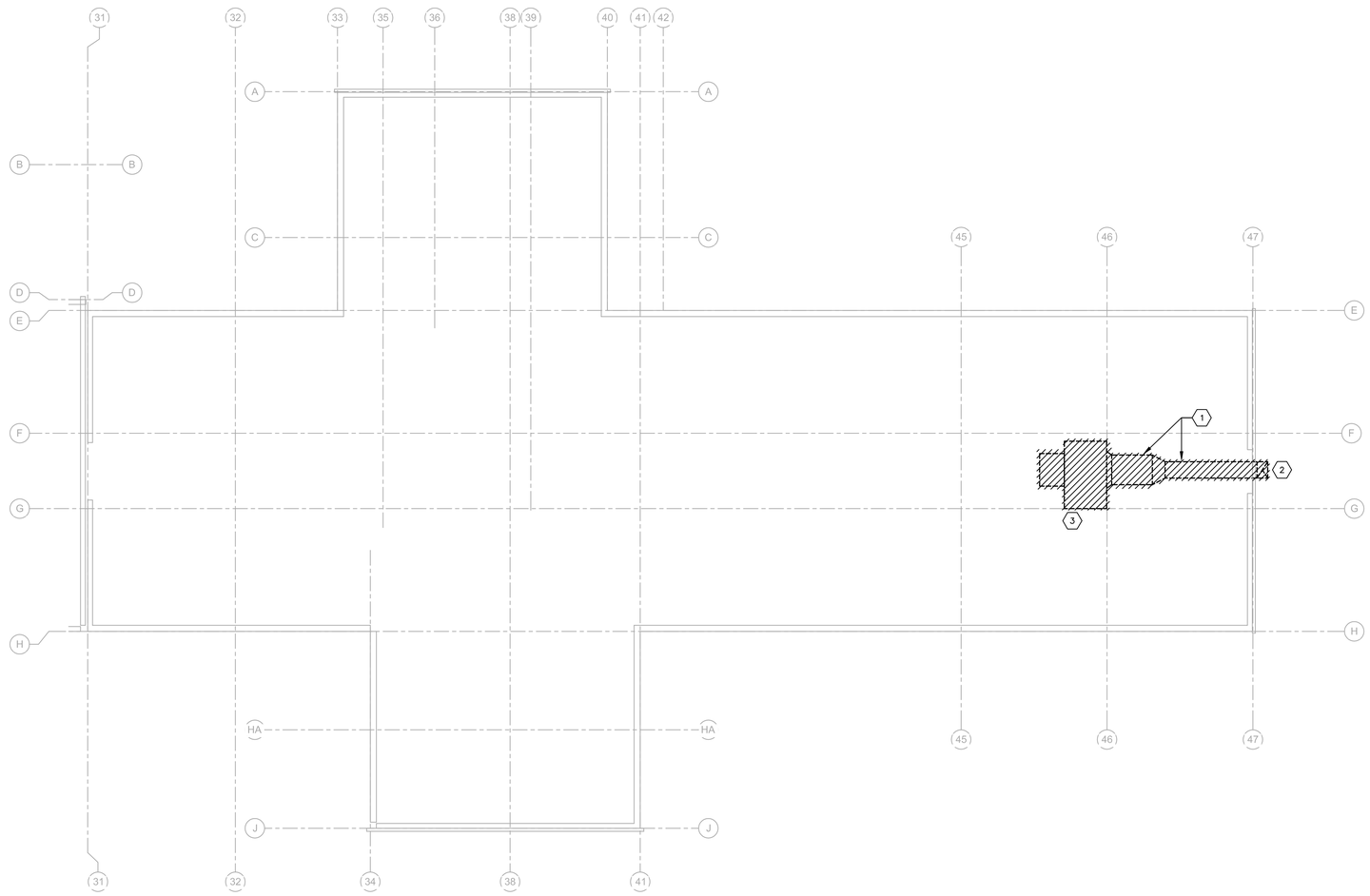

01 MECHANICAL DEMOLITION ROOF PLAN
SCALE: 1/8" = 1'-0"

0' 8' 16' 32' NORTH

SHEET NOTES

1. FIELD VERIFY (E) CONDITIONS PRIOR TO COMMENCEMENT OF WORK. NOTIFY ENGINEER OF ANY DISCREPANCIES.
2. MECHANICAL CONTRACTOR SHALL COORDINATE WITH VA PROJECT MANAGER/ BUILDING FACILITY ENGINEER TO GET NECESSARY PERMIT TO ISOLATE (E) MECHANICAL SERVICES PRIOR TO COMMENCEMENT OF ANY MECHANICAL DEMOLITION WORK INDICATED ON THIS DRAWING.
3. MECHANICAL CONTRACTOR SHALL BE RESPONSIBLE TO PROTECT ALL (E) BUILDING SERVICES, (E) BUILDING STRUCTURE & ARCHITECTURAL ELEMENTS ETC. DURING THE ENTIRE PERIOD OF MECHANICAL DEMOLITION WORK.
4. LOCATIONS OF EXISTING HVAC EQUIPMENT, DUCTS, PIPING ETC. ARE APPROXIMATE AND ARE INDICATED FOR REFERENCE ONLY. EXACT LOCATIONS AND ELEVATIONS SHALL BE VERIFIED IN THE FIELD AND COORDINATED WITH OTHER NEW & EXISTING EQUIPMENT/SERVICES/EXISTING BUILDING STRUCTURE AND NEW WORK PLATFORM STEEL STRUCTURE.
5. CAP AND SEAL ANY DUCTWORK/PIPING DUE TO DEMOLITION WORK THAT WILL BE REMAINING AS IS.
6. CONTRACTOR SHALL FIELD VERIFY OPERATION AND FUNCTIONING OF ALL (E) CONTROLS, VALVES AND DEVICES AND SHALL REPLACE ALL (E) FAULTY CONTROLS, VALVES AND DEVICES WITH NEW WHICH WILL BE REUSED IN THE NEW HAVC SYSTEM.

KEY NOTES

1. DEMO (E) EXHAUST AIR DUCT WORK ON ROOF ALONG WITH ALL DUCT SUPPORTS.
2. DEMOLISH EXISTING EXHAUST DUCT RISER RUNNING INSIDE THE ARCHITECTURAL SHEET METAL ENCLOSURE UP TO THE ROOF. COORDINATE WITH GENERAL CONTRACTOR TO REMOVE THE ARCHITECTURAL ENCLOSURE TO FACILITATE DEMOLITION WORK.
3. DEMOLISH (E) EXHAUST AIR FAN ON ROOF ALONG WITH ASSOCIATED ALL CONTROLS, WIRING ETC.

FINAL BID DOCUMENTS

Revisions:	Date
ISSUED AS 60% PROGRESS SET	11.01.2013

CONSULTANTS:

SYSKA HENNESSY GROUP
A member company of SH Group, Inc.

Syska Hennessy Group, Inc.
425 California Street
Suite 700
San Francisco, CA 94104
Tel: 415.288.9060
Fax: 415.835.0385
www.syska.com

REGISTERED PROFESSIONAL ENGINEER
PRASAD V. MORE
No. M35846
Exp.Mar.31,2014
MECHANICAL
STATE OF CALIFORNIA

ARCHITECT/ENGINEERS:

ESTABLISHED 1988 HILLIARD ARCHITECTS GOING GREEN

HILLIARD ARCHITECTS, INC
251 Post Street, Suite 620
San Francisco, CA 94108-5017
Tel 415 989 6400, Fax 415 989 3056
www.HilliardArchitects.com

Drawing Title: **MECHANICAL DEMOLITION ROOF PLAN**

Approved: Project Director

Project Title: **VA PA BLDG 6 LAB RENOVATION**

Location: VAPAHCS - PALO ALTO CAMPUS, 3801 MIRANDA AVE, PALO ALTO, CA 94304

Date: 04.17.2014 | Checked: PVM | Drawn: RB

Project Number: 640-13-121P

Building Number: 6

Drawing Number: MD103

Dwg. 2 of 11

Office of Construction and Facilities Management

Department of Veterans Affairs

HILLIARD ARCHITECTS INC. COPYRIGHT 2008

VA FORM 08-6231

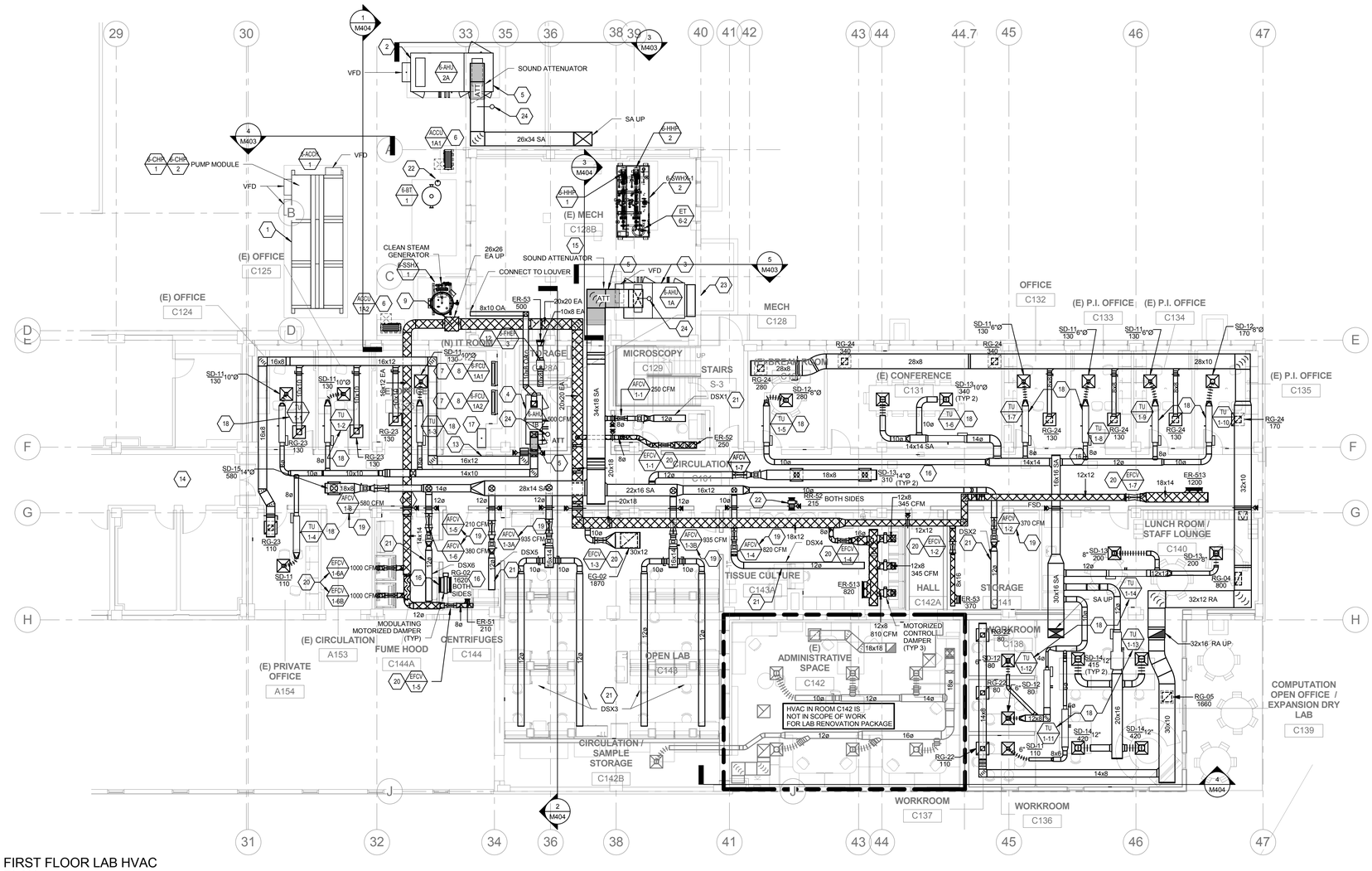

1 FIRST FLOOR LAB HVAC PLAN
1/8" = 1'-0"

KEY NOTES:

1. MODULAR AIR COOLED WATER CHILLER MOUNTED ON HOUSE KEEPING PAD ON GRADE LEVEL. COORDINATE THE UNIT LOCATION WITH (E) BUILDING STRUCTURE AND OTHER BUILDING SERVICES. PROVIDE SERVICE AND MAINTENANCE CLEARANCES AS RECOMMENDED BY THE UNIT MANUFACTURER.
2. 100% OUTSIDE AIR HANDLING UNIT TO SERVE LAB AREAS ON 2ND FLOOR. MOUNT AIR HANDLING UNIT ON A HOUSE KEEPING PAD ON GRADE LEVEL. COORDINATE THE UNIT LOCATION WITH (E) BUILDING STRUCTURE AND OTHER BUILDING SERVICES. PROVIDE SERVICE AND MAINTENANCE CLEARANCES AS RECOMMENDED BY THE UNIT MANUFACTURER.
3. 100% OUTSIDE AIR HANDLING UNIT TO SERVE LAB AREAS ON 1ST FLOOR. MOUNT AIR HANDLING UNIT ON (E) HOUSE KEEPING PAD INSIDE MECHANICAL ROOM C-128B AT BASEMENT LEVEL. PROVIDE DUCT TRANSITION WITH FLEXIBLE DUCT CONNECTOR FROM (E) OA INTAKE WALL LOUVER AND AHU INTAKE. COORDINATE THE UNIT LOCATION WITH (E) BUILDING STRUCTURE AND OTHER BUILDING SERVICES. PROVIDE SERVICE AND MAINTENANCE CLEARANCES AS RECOMMENDED BY THE UNIT MANUFACTURER.
4. AIR HANDLING UNIT TO SERVE ADMINISTRATION OFFICES. MOUNT AIR HANDLING UN IT ON HOUSE KEEPING PAD INSIDE MECHANICAL ROOM. COORDINATE THE UNIT LOCATION WITH (E) BUILDING STRUCTURE AND OTHER BUILDING SERVICES. PROVIDE SERVICE AND MAINTENANCE CLEARANCES AS RECOMMENDED BY THE UNIT MANUFACTURER.
5. PROVIDE SOUND ATTENUATION IN THE SUPPLY AIR DUCT AT THE UNIT DISCHARGE PER MECHANICAL SCHEDULE.
6. AIR COOLED CONDENSING UNIT MOUNTED ON HOUSE KEEPING PAD ON GRADE LEVEL. COORDINATE THE UNIT LOCATION WITH (E) BUILDING STRUCTURE AND OTHER BUILDING SERVICES. PROVIDE SERVICE AND MAINTENANCE CLEARANCES AS RECOMMENDED BY THE UNIT MANUFACTURER. REFER MECHANICAL DETAIL 7/M505 FOR MOUNTING.
7. SPLIT SYSTEM WALL MOUNTED DUCTLESS FAN COIL UNIT PER MECHANICAL SCHEDULE. REFER MECHANICAL DETAIL 9/M505 FOR MOUNTING.
8. PROVIDE & INSTALL FACTORY SUPPLIED REFRIGERANT PIPING (LIQUID & SUCTION LINE SETS), VALVES, ACCESSORIES, AND CONTROLS EXACTLY AS RECOMMENDED BY THE UNIT MANUFACTURER. COORDINATE ROUTING OF REFRIGERANT PIPING WITH (E) BUILDING STRUCTURE AND OTHER BUILDING SERVICES.
9. 28'Ø LAB EXHAUST DUCT RISER UP TO ROOF.
10. 8X6 RELIEF AIR DUCT FROM MECHANICAL ROOM C-128.
11. 10X8 OUTSIDE AIR DUCT TO MECHANICAL ROOM C-128.
12. INLINE DUCT MOUNTED VARIABLE SPEED RELIEF AIR FAN RF/B-1. REFER MECHANICAL DETAIL 10/M506 FOR MOUNTING.
13. TRANSFER AIR DUCT WITH 1" THICK ACOUSTIC DUCT LINER.
14. NO MECHANICAL SCOPE OF WORK IN THE SPACES OF UNIT A & B BETWEEN GRID LINES 1 THROUGH 30 UNLESS SPECIFICALLY SHOWN OR CALLED OUT.
15. COORDINATE ALL NEW MECHANICAL WORK WITH (E) MECHANICAL WORK INSIDE MECHANICAL ROOM C-128B AHEAD OF TIME TO VOID CONFLICTS AND ENSURE REQUIRED SPACE FOR NEW MECHANICAL EQUIPMENTWORK THAT IS SPECIFIED ON THE DRAWING FOR THIS PROJECT.
16. TRANSFER AIR DUCT WITH OPPOSED BLADE LOW LEAKAGE MODULATING CONTROL DAMPER. PROVIDE TRANSFER GRILLES ON BOTH ENDS.
17. WALL-MOUNTED DDC CONTROL PANEL. COORDINATELOCATION WITH OTHER TRADES.
18. SINGLE DUCT VAV TERMINAL UNIT WITH REHEAT COIL AND 5 FEET FACTORY PROVIDED SOUND ATTENUATOR PER MECHANICAL SCHEDULE. REFER MECHANICAL DETAIL 5/M502.
19. SUPPLY AIR VENTURI CONTROL VALVE (VARIABLE VOLUME) WITH REHEAT COIL PER MECHANICAL SCHEDULE.
20. EXHAUST AIR VENTURI CONTROL VALVE (VARIABLE VOLUME) PER MECHANICAL SCHEDULE.
21. SUPPLY AIR DUCTSOX DIFFUSER PER MECHANICAL SCHEDULE. REFER MECHANICAL DETAIL 2/M505 FOR MOUNTING.
22. CHEMICAL POT FEEDER.
23. EXISTING WALL LOUVER. CLEAN LOUVER PRIOR TO INSTALLATION OF ASSOCIATED DUCT WORK.
24. DUCT SMOKE DETECTOR.

SHEET NOTES:

1. FIELD VERIFY (E) CONDITIONS PRIOR TO COMMENCEMENT OF WORK. NOTIFY ENGINEER OF ANY DISCREPANCIES.
2. LAB RENOVATION SCOPE OF WORK IS SHOWN IN BOLD.
3. CONNECT (E) MECHANICAL SERVICES TO THE NEW MECHANICAL SERVICES AS SHOWN AND AS INDICATED ON THIS DRAWING.
4. THIS CONTRACTOR SHALL COORDINATE WITH VA FACILITY ENGINEER/ VA OFFICIAL REPRESENTATIVE TO GET NECESSARY PERMIT TO ISOLATE (E) FUNCTIONAL MECHANICAL SERVICES PRIOR TO COMMENCEMENT OF ANY NEW WORK INDICATED ON THIS DRAWING.
5. THIS CONTRACTOR SHALL BE RESPONSIBLE TO PROTECT ALL (E) BUILDING SERVICES, (E) BUILDING STRUCTURE & ARCHITECTURAL ELEMENTS ETC. DURING THE ENTIRE PERIOD OF CONSTRUCTION.
6. LOCATIONS OF EXISTING EQUIPMENT, DUCTWORK, PIPING ETC. ARE APPROXIMATE AND ARE INDICATED FOR REFERENCE ONLY. THIS CONTRACTOR SHALL BE RESPONSIBLE TO VERIFY AND COORDINATE EXACT LOCATIONS AND ELEVATIONS IN THE FIELD.
7. COORDINATE WITH GENERAL CONTRACTOR FOR ANY FLOOR/CEILING/WALL/ROOF PENETRATION OR CORE DRILLING WORK, INCLUDING ANY WORK IN THE RISER SHAFT SPACE ETC. NO WORK SHALL BE PERFORMED WITH OUT APPROVAL FROM VA OFFCIALS/VA FACILITY ENGINEER/GENERAL CONTRACTOR.
8. COORDINATE WITH G.C. FOR CEILING ACCESS TO CARRY OUT ALL MECHANICAL/PLUMBING WORK. COORDINATE WITH G.C. TO PROVIDE ALL NEW CEILING ACCESS PANELS THAT ARE NECESSARY FOR THE MAINTENANCE & SERVICE OF THE NEW MECHANICAL EQUIPMENT AS RECOMMENDED BY THE EQUIPMENT MANUFACTURERS.
9. COORDINATE EXACT LOCATIONS OF THERMOSTAT WITH THE ARCHITECT BEFORE INSTALLATION.
10. COORDINATE WITH GENERAL CONTRACTOR TO PROVIDE CEILING ACCESS PANELS TO ACCESS ALL VOLUME AND MOTORIZED DAMPERS LOCATED OVER NON- ACCESSIBLE CEILING.
11. PROVIDE YOUNG REGULATORS REMOTE OPERATOR DAMPER WHERE CEILING IS NON-ACCESSIBLE.
12. PROVIDE TRANSITIONAL DUCTWORK WHERE EVER REQUIRED TO CONNECT TO DUCT SIZES SHOWN IN THE PLAN.
13. INSTALL BALANCING DAMPERS AS FAR AWAY FROM THE DIFFUSERS AS POSSIBLE PREFERABLY AFTER THE TAKE-OFF FROM A BRANCH DUCT. ALL DIFFUSERS AND REGISTERS SHALL HAVE BALANCING DAMPERS WHETHER SHOWN ON PLANS OR NOT.
14. LOCATIONS OF NEW EQUIPMENT, DUCTWORK, PIPING ETC. ARE APPROXIMATE. CONTRACTOR SHALL INCLUDE IN HIS BID ALL REQUIRED OFFSETS, TRANSITIONS, FITTINGS ETC. THAT ARE REQUIRED TO ROUTE THE NEW DUCTWORK AND PIPING TO AVOID CONFLICTS WITH (E) BUILDING STRUCTURE AND OTHER BUILDING SERVICES.
15. REFER MECHANICAL SCHEDULES DRAWINGS TO PROVIDE ALL EQUIPMENT, EQUIPMENT ACCESSORIES, AND OPTIONS SPECIFIED.
16. REFER DRAWING C-701 & C-702 TO PROVIDE REQUIRED CONTROLS, CONTROL DEVICES AND CONTROL WIRING ETC.
17. ALL DUCTWORK RUNNING EXPOSED ON THE ROOF SHALL BE SUPPORTED PER MECHANICAL DETAIL AS APPLICABLE.
18. PROVIDE CONDENSATE DRAIN PIPING FOR ALL THE AIR HANDLING UNITS PER MECHANICAL DETAIL.
19. PROVIDE PROPER EXHAUST AIR DUCT TRANSITION BETWEEN EXHAUST AIR FLOW CONTROL VENTURI VALVE AND BIOLOGICAL SAFTEY CABINETS.
20. REFER TO ZONING PLAN DRAWINGS M-401 & M-402 FOR TEMPERATURE SENSOR AND PRESSURE DIFFERENTIAL SENSOR LOCATIONS.

49 KEY PLAN

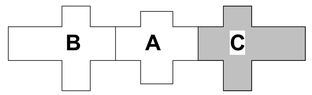

0' 8' 16' 32' NORTH

FINAL BID DOCUMENTS

HILLIARD ARCHITECTS INC. COPYRIGHT

Revisions:	Date

CONSULTANTS:

SYSKA HENNESSY GROUP
A member company of SH Group, Inc.

Syska Hennessy Group, Inc.
425 California Street
Suite 700
San Francisco, CA 94104
Tel: 415.288.9060
Fax: 415.835.0385
www.syska.com

REGISTERED PROFESSIONAL ENGINEER PRASAD V. MORE No. M35846 Exp.Mar.31,2014 MECHANICAL STATE OF CALIFORNIA

ARCHITECT/ENGINEERS:

ESTABLISHED 1988 HILLIARD ARCHITECTS GOING GREEN

HILLIARD ARCHITECTS, INC
251 Post Street, Suite 620
San Francisco, CA 94108-5017
Tel 415 989 6400, Fax 415 989 3056
www.HilliardArchitects.com

Drawing Title: **MECHANICAL HVAC 1ST FLOOR PLAN**

Approved: Project Director

Project Title: **VA PA BLDG 6 LAB RENOVATION**

Location: **VAPAHCS, PALO ALTO CAMPUS 3801 MIRANDA AVE. PALO ALTO, CA 94304**

Date: **04.17.2014** | Checked: **PM** | Drawn: **JP**

Project Number: **640-13-121P**

Building Number: **6**

Drawing Number: **M101**

Dwg. of

Office of Construction and Facilities Management

Department of Veterans Affairs

VA FORM 08-6231

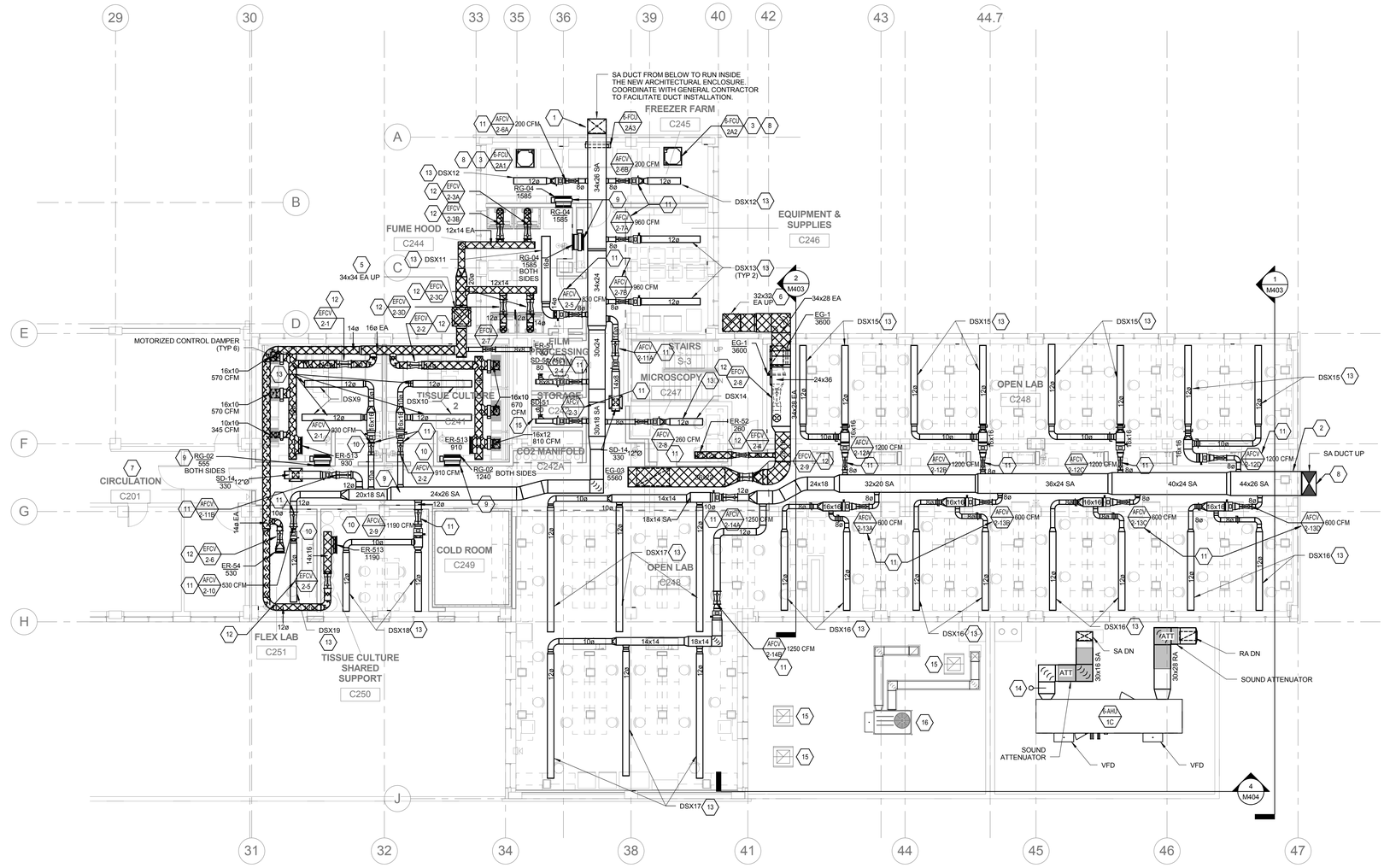

1 SECOND FLOOR HVAC PLAN
1/8" = 1'-0"

KEY NOTES:

1. 100% OUTSIDE AIR DUCT TO FROM AIR HANDLING UNIT AHU/6-2A.
2. 100% OUTSIDE AIR DUCT TO FROM AIR HANDLING UNIT AHU/6-2B.
3. SPLIT SYSTEM WALL/CEILING MOUNTED DUCTLESS FAN COIL UNIT PER MECHANICAL SCHEDULE.
4. PROVIDE & INSTALL FACTORY SUPPLIED REFRIGERANT PIPING (LIQUID & SUCTION LINE SETS), VALVES, ACCESSORIES, AND CONTROLS EXACTLY AS RECOMMENDED BY THE UNIT MANUFACTURER. COORDINATE ROUTING OF REFRIGERANT PIPING WITH (E) BUILDING STRUCTURE AND OTHER BUILDING SERVICES.
5. 36"Ø LAB EXHAUST DUCT RISER UP TO ROOF.
6. 34"Ø LAB EXHAUST DUCT RISER UP TO ROOF.
7. NO MECHANICAL SCOPE OF WORK IN THE SPACES OF UNIT A & B BETWEEN GRID LINES 1 THROUGH 30 UNLESS SPECIFICALLY SHOWN OR CALLED OUT.
8. SUPPLY AIR DUCT FROM ABOVE TO RUN INSIDE THE EXISTING ARCHITECTURAL ENCLOSURE. COORDINATE WITH GENERAL CONTRACTOR TO REMOVE THE EXISTING ARCHITECTURAL ENCLOSURE TO FACILITATE DUCT INSTALLATION AND TO REINSTALL AFTER COMPLETION OF DUCTWORK INSTALLATION.
9. TRANSFER AIR DUCT WITH OPPOSED BLADE LOW LEAKAGE MODULATING CONTROL DAMPER. PROVIDE TRANSFER GRILLES ON BOTH ENDS.
10. WALL-MOUNTED DDC CONTROL PANEL. COORDINATE LOCATION WITH OTHER TRADES.
11. SUPPLY AIR VENTURI CONTROL VALVE (VARIABLE VOLUME) WITH REHEAT COIL PER MECHANICAL SCHEDULE.
12. EXHAUST AIR VENTURI CONTROL VALVE (VARIABLE VOLUME) PER MECHANICAL SCHEDULE.
13. SUPPLY AIR DUCTSOX DIFFUSER PER MECHANICAL SCHEDULE. REFER MECHANICAL DETAIL 2/M505 FOR MOUNTING.
14. DUCT SMOKE DETECTOR.
15. EXISTING ROOF EXHAUST HOOD FOR ADMIN. REFER TO DETAIL 1/M507.
16. EXISTING ROOFTOP AC UNIT AND ASSOCIATED DUCTWORK FOR ADMIN.

SHEET NOTES:

1. FIELD VERIFY (E) CONDITIONS PRIOR TO COMMENCEMENT OF WORK. NOTIFY ENGINEER OF ANY DISCREPANCIES.
2. LAB RENOVATION SCOPE OF WORK IS SHOWN IN BOLD.
3. CONNECT (E) MECHANICAL SERVICES TO THE NEW MECHANICAL SERVICES AS SHOWN AND AS INDICATED ON THIS DRAWING.
4. THIS CONTRACTOR SHALL COORDINATE WITH VA FACILITY ENGINEER/ VA OFFICIAL REPRESENTATIVE TO GET NECESSARY PERMIT TO ISOLATE (E) FUNCTIONAL MECHANICAL SERVICES PRIOR TO COMMENCEMENT OF ANY NEW WORK INDICATED ON THIS DRAWING.
5. THIS CONTRACTOR SHALL BE RESPONSIBLE TO PROTECT ALL (E) BUILDING SERVICES, (E) BUILDING STRUCTURE & ARCHITECTURAL ELEMENTS ETC. DURING THE ENTIRE PERIOD OF CONSTRUCTION.
6. LOCATIONS OF EXISTING EQUIPMENT, DUCTWORK, PIPING ETC. ARE APPROXIMATE AND ARE INDICATED FOR REFERENCE ONLY. THIS CONTRACTOR SHALL BE RESPONSIBLE TO VERIFY AND COORDINATE EXACT LOCATIONS AND ELEVATIONS IN THE FIELD.
7. COORDINATE WITH GENERAL CONTRACTOR FOR ANY FLOOR/CEILING/WALL/ROOF PENETRATION OR CORE DRILLING WORK, INCLUDING ANY WORK IN THE RISER SHAFT SPACE ETC. NO WORK SHALL BE PERFORMED WITH OUT APPROVAL FROM VA OFFICIALS/VA FACILITY ENGINEER/GENERAL CONTRACTOR.
8. COORDINATE WITH G.C. FOR CEILING ACCESS TO CARRY OUT ALL MECHANICAL/PLUMBING WORK. COORDINATE WITH G.C. TO PROVIDE ALL NEW CEILING ACCESS PANELS THAT ARE NECESSARY FOR THE MAINTENANCE & SERVICE OF THE NEW MECHANICAL EQUIPMENT AS RECOMMENDED BY THE EQUIPMENT MANUFACTURERS.
9. COORDINATE EXACT LOCATIONS OF THERMOSTAT WITH THE ARCHITECT BEFORE INSTALLATION.
10. COORDINATE WITH GENERAL CONTRACTOR TO PROVIDE CEILING ACCESS PANELS TO ACCESS ALL VOLUME AND MOTORIZED DAMPERS LOCATED OVER NON- ACCESSIBLE CEILING.
11. PROVIDE YOUNG REGULATORS REMOTE OPERATOR DAMPER WHERE CEILING IS NON-ACCESSIBLE.
12. PROVIDE TRANSITIONAL DUCTWORK WHERE EVER REQUIRED TO CONNECT TO DUCT SIZES SHOWN IN THE PLAN.
13. INSTALL BALANCING DAMPERS AS FAR AWAY FROM THE DIFFUSERS AS POSSIBLE PREFERABLY AFTER THE TAKE-OFF FROM A BRANCH DUCT. ALL DIFFUSERS AND REGISTERS SHALL HAVE BALANCING DAMPERS WHETHER SHOWN ON PLANS OR NOT.
14. LOCATIONS OF NEW EQUIPMENT, DUCTWORK, PIPING ETC. ARE APPROXIMATE. CONTRACTOR SHALL INCLUDE IN HIS BID ALL REQUIRED OFFSETS, TRANSITIONS, FITTINGS ETC. THAT ARE REQUIRED TO ROUTE THE NEW DUCTWORK AND PIPING TO AVOID CONFLICTS WITH (E) BUILDING STRUCTURE AND OTHER BUILDING SERVICES.
15. REFER MECHANICAL SCHEDULES DRAWINGS TO PROVIDE ALL EQUIPMENT, EQUIPMENT ACCESSORIES, AND OPTIONS SPECIFIED.
16. REFER DRAWING C-701 & C-702 TO PROVIDE REQUIRED CONTROLS, CONTROL DEVICES AND CONTROL WIRING ETC.
17. ALL DUCTWORK RUNNING EXPOSED ON THE ROOF SHALL BE SUPPORTED PER MECHANICAL DETAIL AS APPLICABLE.
18. PROVIDE CONDENSATE DRAIN PIPING FOR ALL THE AIR HANDLING UNITS PER MECHANICAL DETAIL.
19. PROVIDE PROPER EXHAUST AIR DUCT TRANSITION BETWEEN EXHAUST AIR FLOW CONTROL VENTURI VALVE AND BIOLOGICAL SAFTEY CABINETS.
20. REFER TO ZONING PLAN DRAWINGS M-401 & M-402 FOR TEMPERATURE SENSOR AND PRESSURE DIFFERENTIAL SENSOR LOCATIONS.

49 KEY PLAN

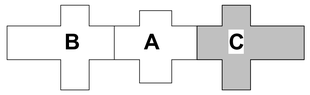

0' 8' 16' 32' NORTH

FINAL BID DOCUMENTS

HILLIARD ARCHITECTS INC. COPYRIGHT

Revisions:	Date

CONSULTANTS:

SYSKA HENNESSY GROUP
A member company of SH Group, Inc.

Syska Hennessy Group, Inc.
425 California Street
Suite 700
San Francisco, CA 94104
Tel: 415.288.9060
Fax: 415.835.0385
www.syska.com

REGISTERED PROFESSIONAL ENGINEER
PRASAD V. MORE
No. M35846
Exp.Mar.31.2014
MECHANICAL
STATE OF CALIFORNIA

ARCHITECT/ENGINEERS:

ESTABLISHED 1988 HILLIARD ARCHITECTS
GOING GREEN

HILLIARD ARCHITECTS, INC
251 Post Street, Suite 620
San Francisco, CA 94108-5017
Tel 415 989 6400, Fax 415 989 3056
www.HilliardArchitects.com

Drawing Title: **MECHANICAL HVAC 2ND FLOOR PLAN**

Approved: Project Director

Project Title: **VA PA BLDG 6 LAB RENOVATION**

Location: **VAPAHCS, PALO ALTO CAMPUS**
3801 MIRANDA AVE. PALO ALTO, CA 94304

Date: **04.17.2014** | Checked: **PM** | Drawn: **JP**

Project Number: **640-13-121P**

Building Number: **6**

Drawing Number: **M102**

Dwg. of

Office of Construction and Facilities Management

Department of Veterans Affairs

VA FORM 08-6231

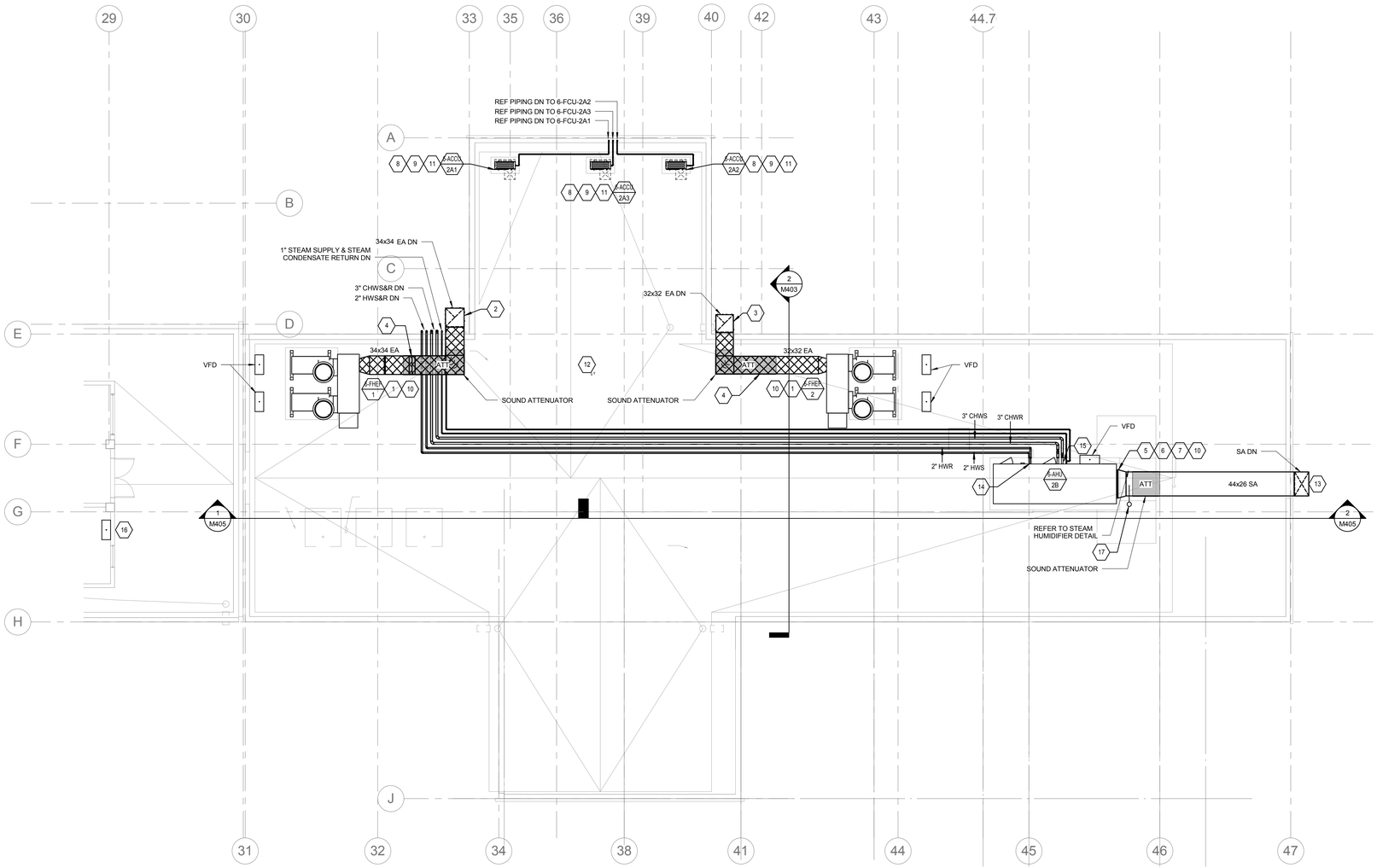

1 ROOF PLAN HVAC PLAN
1/8" = 1'-0"

KEY NOTES:

1. PROVIDE FUME EXHAUST FAN PER MECHANICAL SCHEDULE. PROVIDE FAN ON FULL PERIMETER FACTORY PROVIDED ISOLATION BASE WITH SPRING VIBRATION ISOLATORS AND MOUNT IT ON HOUSE KEEPING PAD. COORDINATE THE UNIT LOCATION WITH RESPECT TO (E) BUILDING STRUCTURE AND ENSURE THAT SERVICE AND MAINTENANCE CLEARANCES ARE PROVIDED AS RECOMMENDED BY THE UNIT MANUFACTURER. REFER MECHANICAL DETAIL 5/M502 FOR MOUNTING.
2. 36" Ø LAB EXHAUST DUCT FROM BELOW.
3. 34" Ø LAB EXHAUST DUCT FROM BELOW.
4. MATERIAL OF CONSTRUCTION OF ALL LAB DUCTWORK ASSOCIATED WITH EF/6-1 AND EF/6-2 SHALL BE WELDED STAINLESS STEEL TYPE SS304.
5. PROVIDE DUCT FLEXIBLE CONNECTOR WITH WEATHER SHIELD AT THE DUCT CONNECTION TO THE UNIT.
6. 100% OUTSIDE AIR HANDLING UNIT TO SERVE LAB AREAS ON 2ND FLOOR. MOUNT AIR HANDLING UNIT ON A HOUSE KEEPING PAD. COORDINATE THE UNIT LOCATION WITH (E) BUILDING STRUCTURE AND OTHER BUILDING SERVICES. PROVIDE SERVICE AND MAINTENANCE CLEARANCES AS RECOMMENDED BY THE UNIT MANUFACTURER.
7. PROVIDE SOUND ATTENUATION IN THE SUPPLY AIR DUCT AT THE UNIT DISCHARGE PER MECHANICAL SCHEDULE.
8. AIR COOLED CONDENSING UNIT MOUNTED ON HOUSE KEEPING PAD ON GRADE LEVEL. COORDINATE THE UNIT LOCATION WITH (E) BUILDING STRUCTURE AND OTHER BUILDING SERVICES. PROVIDE SERVICE AND MAINTENANCE CLEARANCES AS RECOMMENDED BY THE UNIT MANUFACTURER. REFER MECHANICAL DETAIL 7/M505 FOR MOUNTING.
9. PROVIDE & INSTALL FACTORY SUPPLIED REFRIGERANT PIPING (LIQUID & SUCTION LINE SETS), VALVES, ACCESSORIES, AND CONTROLS EXACTLY AS RECOMMENDED BY THE UNIT MANUFACTURER. COORDINATE ROUTING OF REFRIGERANT PIPING WITH (E) BUILDING STRUCTURE AND OTHER BUILDING SERVICES.
10. COORDINATE AND ROUTE ALL DUCTWORK ON ROOF. PROVIDE TRANSITION OFFSETS AS REQUIRED IN THE DUCTWORK TO AVOID CONFLICTS WITH (E) BUILDING STRUCTURE AND OTHER BUILDING SERVICES.
11. REFRIGERANT PIPES (LIQUID & SUCTION LINES) FROM AIR COOLED CONDENSING UNIT CU/B9 DOWN TO CONNECT FAN COIL UNIT FC/B9 ON BASEMENT LEVEL. PROVIDE & INSTALL FACTORY SUPPLIED REFRIGERANT PIPING (LINE SETS), VALVES, ACCESSORIES, AND CONTROLS EXACTLY AS RECOMMENDED BY UNIT MANUFACTURER.
12. COORDINATE WITH STRUCTURAL/GENERAL CONTRACTOR FOR WALL OPENINGS IN THE (E) BUILDING STRUCTURE TO RUN THE NEW MECHANICAL SERVICES.
13. SUPPLY AIR DUCT DROP TO RUN INSIDE THE EXISTING ARCHITECTURAL ENCLOSURE. COORDINATE WITH GENERAL CONTRACTOR TO REMOVE THE EXISTING ARCHITECTURAL ENCLOSURE TO FACILITATE DUCT INSTALLATION AND TO REINSTALL AFTER COMPLETION OF DUCTWORK INSTALLATION.
14. HOT WATER HEATING COIL. REFER TO DETAIL #4 ON M501 FOR DETAILED PIPING CONNECTIONS.
15. CHILLED WATER COOLING COIL. REFER TO DETAIL #4 ON M501 FOR DETAILED PIPING CONNECTIONS.
16. DDC CONTROL PANEL. COORDINATE LOCATION WITH OTHER TRADES.
17. DUCT SMOKE DETECTOR.

SHEET NOTES:

1. FIELD VERIFY (E) CONDITIONS PRIOR TO COMMENCEMENT OF WORK. NOTIFY ENGINEER OF ANY DISCREPANCIES.
2. LAB RENOVATION SCOPE OF WORK IS SHOWN IN BOLD.
3. CONNECT (E) BASE BUILDING MECHANICAL SERVICES TO NEW MECHANICAL SERVICES AS SHOWN THAT ARE BEING INSTALLED AS INDICATED ON THIS DRAWING.
4. THIS CONTRACTOR SHALL COORDINATE WITH VA FACILITY ENGINEER/ VA OFFICIAL REPRESENTATIVE TO GET NECESSARY PERMIT TO ISOLATE (E) FUNCTIONAL MECHANICAL SERVICES PRIOR TO COMMENCEMENT OF ANY NEW WORK INDICATED ON THIS DRAWING.
5. THIS CONTRACTOR SHALL BE RESPONSIBLE TO PROTECT ALL (E) BUILDING SERVICES, (E) BUILDING STRUCTURE & ARCHITECTURAL ELEMENTS ETC. DURING THE ENTIRE PERIOD OF CONSTRUCTION.
6. LOCATIONS OF EXISTING EQUIPMENT, DUCTWORK, PIPING ETC. ARE APPROXIMATE AND ARE INDICATED FOR REFERENCE ONLY. THIS CONTRACTOR SHALL BE RESPONSIBLE TO VERIFY AND COORDINATE EXACT LOCATIONS AND ELEVATIONS IN THE FIELD.
7. COORDINATE WITH GENERAL CONTRACTOR FOR ANY FLOOR/CEILING/WALL/ROOF PENETRATION OR CORE DRILLING WORK, INCLUDING ANY WORK IN THE RISER SHAFT SPACE ETC. NO WORK SHALL BE PERFORMED WITH OUT APPROVAL FROM VA OFFCIALS/VA FACILITY ENGINEER/GENERAL CONTRACTOR.
8. COORDINATE WITH G.C. TO PROVIDE HOUSE KEEPING PADS FOR MECHANICAL EQUIPMENT PER MECHANICAL DETAILS. IT SHALL BE CONTRACTORS RESPONSIBILITY TO ENSURE THAT ALL NEW MECHANICAL EQUIPMENT ARE LOCATED SUCH THAT THERE WILL BE MAINTENANCE & SERVICE CLEARANCES AROUND THE MECHANICAL EQUIPMENT AS RECOMMENDED BY THE EQUIPMENT MANUFACTURERS.
9. PROVIDE TRANSITIONAL DUCTWORK ON INLET/DISCHARGE OF MECHANICAL EQUIPMENT AS REQUIRED TO CONNECT TO DUCT SIZES SHOWN IN THE ROOF PLAN.
10. LOCATIONS OF NEW EQUIPMENT, DUCTWORK, PIPING ETC. ARE APPROXIMATE. CONTRACTOR SHALL INCLUDE IN HIS BID ALL REQUIRED OFFSETS, TRANSITIONS, FITTINGS ETC. THAT ARE REQUIRED TO ROUTE THE NEW DUCTWORK AND PIPING TO AVOID CONFLICTS WITH (E) BUILDING STRUCTURE AND OTHER BUILDING SERVICES.
11. REFER MECHANICAL SCHEDULES DRAWINGS TO PROVIDE ALL EQUIPMENT, EQUIPMENT ACCESSORIES, AND OPTIONS SPECIFIED.
12. REFER DRAWING C-701 & C-702 TO PROVIDE REQUIRED CONTROLS, CONTROL DEVICES AND CONTROL WIRING ETC.
13. ALL DUCTWORK RUNNING EXPOSED ON THE ROOF SHALL BE SUPPORTED PER MECHANICAL DETAIL AS APPLICABLE.
14. PROVIDE CONDENSATE DRAIN PIPING FOR ALL THE AIR HANDLING UNITS PER MECHANICAL DETAIL.

0' 8' 16' 32'
NORTH

FINAL BID DOCUMENTS

HILLIARD ARCHITECTS INC. COPYRIGHT

Revisions: Date

CONSULTANTS:

SYSKA HENNESSY GROUP
A member company of SH Group, Inc.

Syska Hennessy Group, Inc.
425 California Street
Suite 700
San Francisco, CA 94104
Tel: 415.288.9060
Fax: 415.835.0385
www.syska.com

REGISTERED PROFESSIONAL ENGINEER
PIRASAD V. MORE
No. M35846
Exp.Mar.31,2014
MECHANICAL
STATE OF CALIFORNIA

ARCHITECT/ENGINEERS:

ESTABLISHED 1988 HILLIARD ARCHITECTS GOING GREEN

HILLIARD ARCHITECTS, INC
251 Post Street, Suite 620
San Francisco, CA 94108-5017
Tel 415 989 6400, Fax 415 989 3056
www.HilliardArchitects.com

Drawing Title: **MECHANICAL HVAC ROOF PLAN**

Approved: Project Director

Project Title: **VA PA BLDG 6 LAB RENOVATION**

Location: VAPAHCS, PALO ALTO CAMPUS
3801 MIRANDA AVE. PALO ALTO, CA 94304

Date: 04.17.2014 | Checked: PM | Drawn: JP

Project Number: 640-13-121P
Building Number: 6
Drawing Number: M103
Dwg. of

Office of Construction and Facilities Management
Department of Veterans Affairs

VA FORM 08-6231

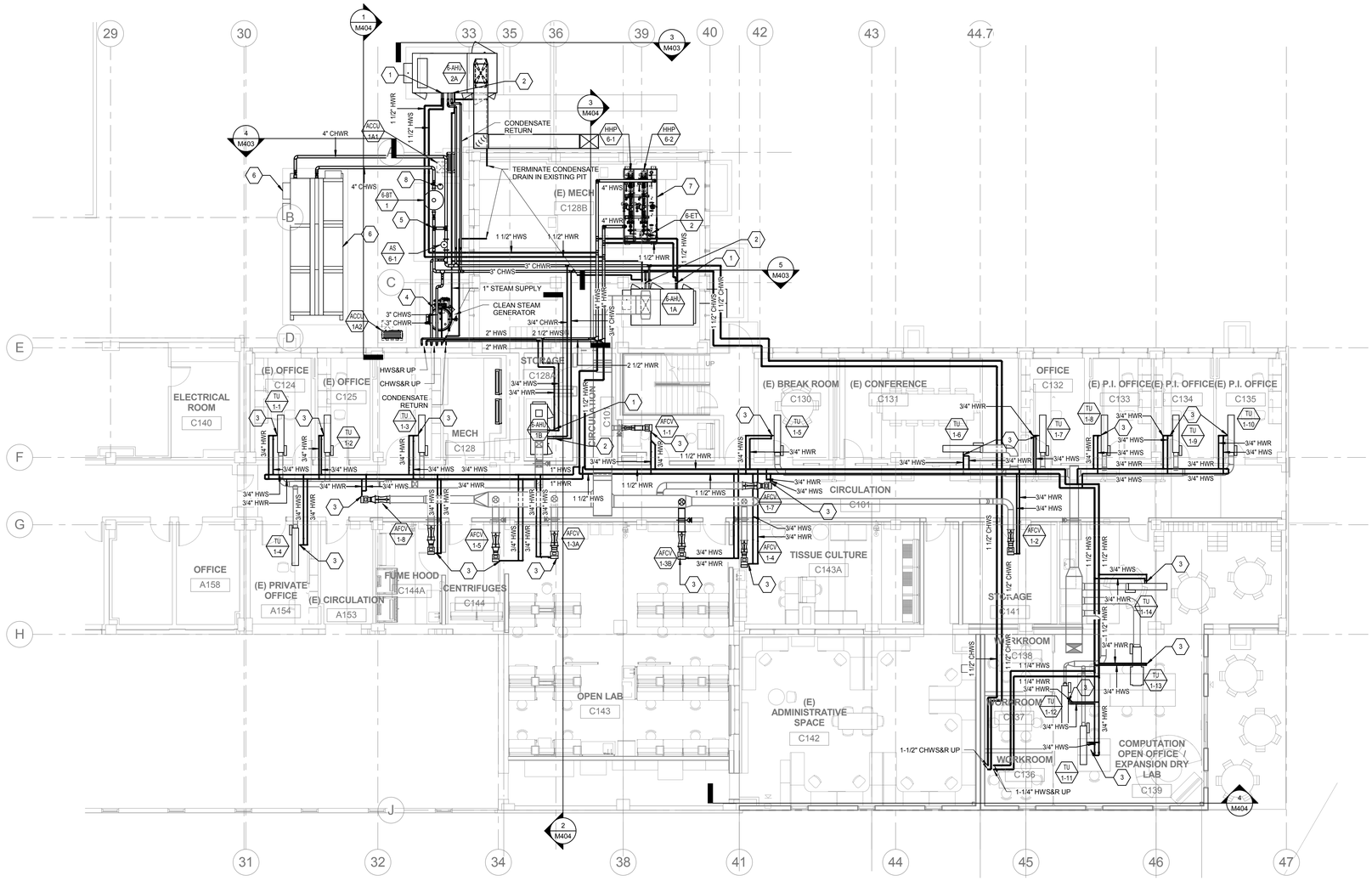

1 LEVEL 1 PIPING PLAN
1/8" = 1'-0"

KEY NOTES:

1. HOT WATER HEATING COIL. REFER TO DETAIL #4 ON M501 FOR DETAILED PIPING CONNECTIONS.
2. CHILLED WATER COOLING COIL. REFER TO DETAIL #4 ON M501 FOR DETAILED PIPING CONNECTIONS.
3. HOT WATER REHEAT COIL. REFER TO DETAIL #10 ON M502 FOR DETAILED PIPING CONNECTIONS.
4. CLEAN STEAM GENERATOR. REFER TO DETAIL # 10 ON M504 FOR DETAILED PIPING CONNECTIONS.
5. CHILLED WATER BYPASS. REFER TO M601 FOR DETAILED PIPING CONNECTIONS.
6. AIR COOLED CHILLER. REFER TO DETAIL #8 ON M502 FOR DETAILED PIPING CONNECTIONS.
7. HEAT TRANSFER PACKAGED SYSTEM FOR HOT WATER. REFER TO DETAIL.
8. 5 GALLON CHEMICAL POT FEEDER.

SHEET NOTES:

1. FIELD VERIFY (E) CONDITIONS PRIOR TO COMMENCEMENT OF WORK. NOTIFY ENGINEER OF ANY DISCREPANCIES.
2. LAB RENOVATION SCOPE OF WORK IS SHOWN IN BOLD.
3. CONNECT (E) BASE BUILDING MECHANICAL SERVICES TO NEW MECHANICAL SERVICES AS SHOWN THAT ARE BEING INSTALLED AS INDICATED ON THIS DRAWING.
4. THIS CONTRACTOR SHALL COORDINATE WITH VA FACILITY ENGINEER/ VA OFFICIAL REPRESENTATIVE TO GET NECESSARY PERMIT TO ISOLATE (E) FUNCTIONAL MECHANICAL SERVICES PRIOR TO COMMENCEMENT OF ANY NEW WORK INDICATED ON THIS DRAWING.
5. THIS CONTRACTOR SHALL BE RESPONSIBLE TO PROTECT ALL (E) BUILDING SERVICES, (E) BUILDING STRUCTURE & ARCHITECTURAL ELEMENTS ETC. DURING THE ENTIRE PERIOD OF CONSTRUCTION.
6. LOCATIONS OF EXISTING EQUIPMENT, DUCTWORK, PIPING ETC. ARE APPROXIMATE AND ARE INDICATED FOR REFERENCE ONLY. THIS CONTRACTOR SHALL BE RESPONSIBLE TO VERIFY AND COORDINATE EXACT LOCATIONS AND ELEVATIONS IN THE FIELD.
7. COORDINATE WITH GENERAL CONTRACTOR FOR ANY FLOOR/CEILING/WALL/ROOF PENETRATION OR CORE DRILLING WORK, INCLUDING ANY WORK IN THE RISER SHAFT SPACE ETC. NO WORK SHALL BE PERFORMED WITH OUT APPROVAL FROM VA OFFCIALS/VA FACILITY ENGINEER/GENERAL CONTRACTOR.
8. COORDINATE WITH G.C. TO PROVIDE HOUSE KEEPING PADS FOR MECHANICAL EQUIPMENT PER MECHANICAL DETAILS. IT SHALL BE CONTRACTORS RESPONSIBILITY TO ENSURE THAT ALL NEW MECHANICAL EQUIPMENT ARE LOCATED SUCH THAT THERE WILL BE MAINTENANCE & SERVICE CLEARANCES AROUND THE MECHANICAL EQUIPMENT AS RECOMMENDED BY THE EQUIPMENT MANUFACTURERS.
9. LOCATIONS OF NEW EQUIPMENT, DUCTWORK, PIPING ETC. ARE APPROXIMATE. CONTRACTOR SHALL INCLUDE IN HIS BID ALL REQUIRED OFFSETS, TRANSITIONS, FITTINGS ETC. THAT ARE REQUIRED TO ROUTE THE NEW DUCTWORK AND PIPING TO AVOID CONFLICTS WITH (E) BUILDING STRUCTURE AND OTHER BUILDING SERVICES.
10. REFER MECHANICAL SCHEDULES DRAWINGS TO PROVIDE ALL EQUIPMENT, EQUIPMENT ACCESSORIES, AND OPTIONS SPECIFIED.
11. REFER DRAWING C-701 & C-702 TO PROVIDE REQUIRED CONTROLS, CONTROL DEVICES AND CONTROL WIRING ETC.
12. ALL PIPING RUNNING EXPOSED ON THE ROOF SHALL BE SUPPORTED PER MECHANICAL DETAIL AS APPLICABLE.
13. PROVIDE CONDENSATE DRAIN PIPING FOR ALL THE AIR HANDLING UNITS PER MECHANICAL DETAIL.

HILLIARD ARCHITECTS INC. COPYRIGHT

FINAL BID DOCUMENTS

Revisions:	Date

CONSULTANTS:

SYSKA HENNESSY GROUP
A member company of SH Group, Inc.

Syska Hennessy Group, Inc.
425 California Street
Suite 700
San Francisco, CA 94104
Tel: 415.288.9060
Fax: 415.835.0385
www.syska.com

REGISTERED PROFESSIONAL ENGINEER
PRASAD V. MORE
No. M35846
Exp.Mar.31.2014
MECHANICAL
STATE OF CALIFORNIA

ARCHITECT/ENGINEERS:

ESTABLISHED 1988 HILLIARD ARCHITECTS GOING GREEN

HILLIARD ARCHITECTS, INC
251 Post Street, Suite 620
San Francisco, CA 94108-5017
Tel 415 989 6400, Fax 415 989 3056
www.HilliardArchitects.com

Drawing Title: **MECHANICAL PIPING 1ST FLOOR PLAN**

Approved: Project Director

Project Title: **VA PA BLDG 6 LAB RENOVATION**

Location: **VAPAHCS, PALO ALTO CAMPUS 3801 MIRANDA AVE. PALO ALTO, CA 94304**

Date: **04.17.2014** | Checked: **PM** | Drawn: **JP**

Project Number: **640-13-121P**

Building Number: **6**

Drawing Number: **MP101**

Dwg. of

Office of Construction and Facilities Management

Department of Veterans Affairs

VA FORM 08-6231

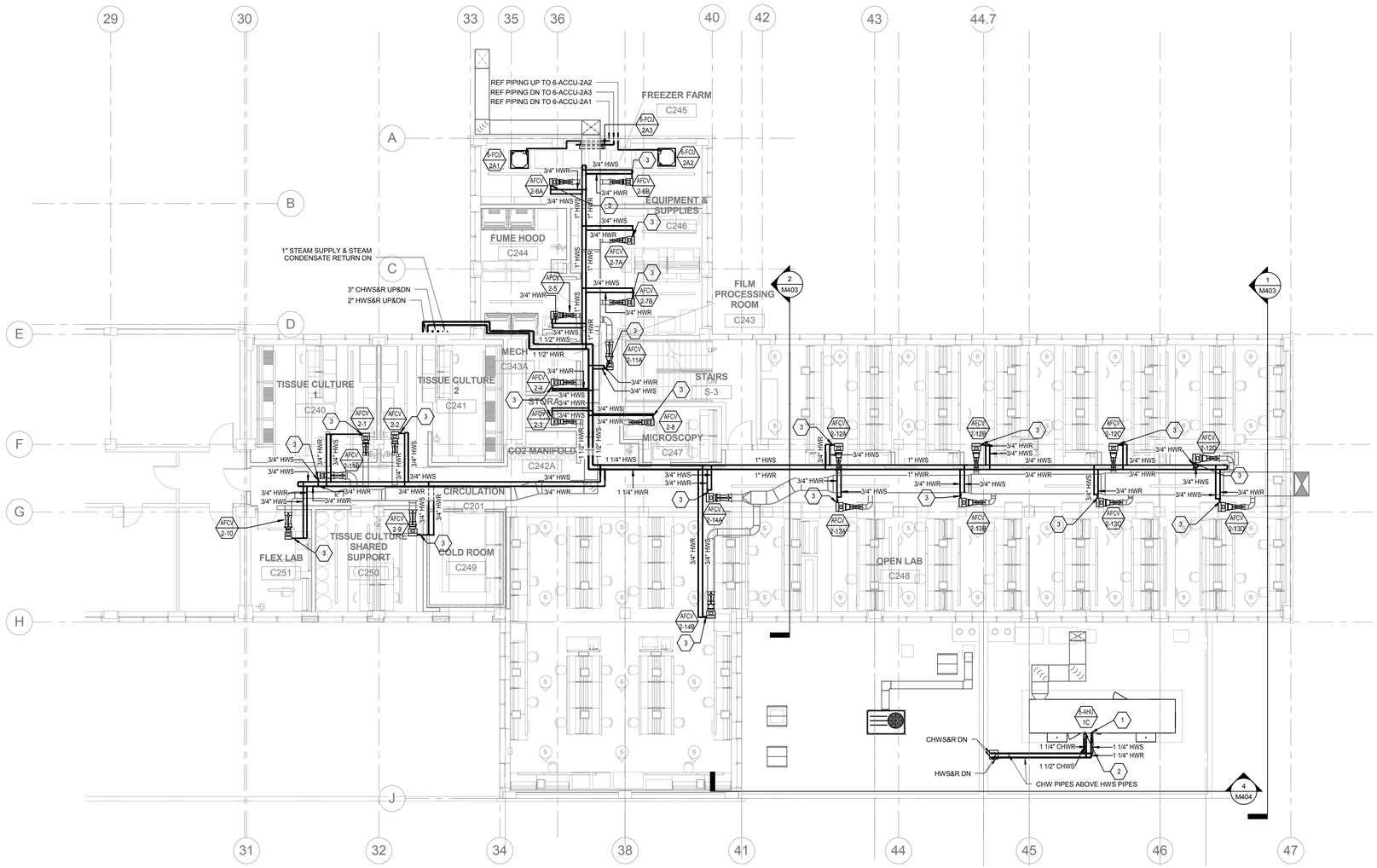

1 LEVEL 2 PIPING PLAN - LAB
1/8" = 1'-0"

KEY NOTES:

1. HOT WATER HEATING COIL. REFER TO DETAIL #4 ON M501 FOR DETAILED PIPING CONNECTIONS.
2. CHILLED WATER COOLING COIL. REFER TO DETAIL #4 ON M501 FOR DETAILED PIPING CONNECTIONS.
3. HOT WATER REHEAT COIL. REFER TO DETAIL #10 ON M502 FOR DETAILED PIPING CONNECTIONS.

SHEET NOTES:

1. FIELD VERIFY (E) CONDITIONS PRIOR TO COMMENCEMENT OF WORK. NOTIFY ENGINEER OF ANY DISCREPANCIES.
2. LAB RENOVATION SCOPE OF WORK IS SHOWN IN BOLD.
3. CONNECT (E) BASE BUILDING MECHANICAL SERVICES TO NEW MECHANICAL SERVICES AS SHOWN THAT ARE BEING INSTALLED AS INDICATED ON THIS DRAWING.
4. THIS CONTRACTOR SHALL COORDINATE WITH VA FACILITY ENGINEER/ VA OFFICIAL REPRESENTATIVE TO GET NECESSARY PERMIT TO ISOLATE (E) FUNCTIONAL MECHANICAL SERVICES PRIOR TO COMMENCEMENT OF ANY NEW WORK INDICATED ON THIS DRAWING.
5. THIS CONTRACTOR SHALL BE RESPONSIBLE TO PROTECT ALL (E) BUILDING SERVICES, (E) BUILDING STRUCTURE & ARCHITECTURAL ELEMENTS ETC. DURING THE ENTIRE PERIOD OF CONSTRUCTION.
6. LOCATIONS OF EXISTING EQUIPMENT, DUCTWORK, PIPING ETC. ARE APPROXIMATE AND ARE INDICATED FOR REFERENCE ONLY. THIS CONTRACTOR SHALL BE RESPONSIBLE TO VERIFY AND COORDINATE EXACT LOCATIONS AND ELEVATIONS IN THE FIELD.
7. COORDINATE WITH GENERAL CONTRACTOR FOR ANY FLOOR/CEILING/WALL/ROOF PENETRATION OR CORE DRILLING WORK, INCLUDING ANY WORK IN THE RISER SHAFT SPACE ETC. NO WORK SHALL BE PERFORMED WITH OUT APPROVAL FROM VA OFFCIALS/VA FACILITY ENGINEER/GENERAL CONTRACTOR.
8. COORDINATE WITH G.C. TO PROVIDE HOUSE KEEPING PADS FOR MECHANICAL EQUIPMENT PER MECHANICAL DETAILS. IT SHALL BE CONTRACTORS RESPONSIBILITY TO ENSURE THAT ALL NEW MECHANICAL EQUIPMENT ARE LOCATED SUCH THAT THERE WILL BE MAINTENANCE & SERVICE CLEARANCES AROUND THE MECHANICAL EQUIPMENT AS RECOMMENDED BY THE EQUIPMENT MANUFACTURERS.
9. LOCATIONS OF NEW EQUIPMENT, DUCTWORK, PIPING ETC. ARE APPROXIMATE. CONTRACTOR SHALL INCLUDE IN HIS BID ALL REQUIRED OFFSETS, TRANSITIONS, FITTINGS ETC. THAT ARE REQUIRED TO ROUTE THE NEW DUCTWORK AND PIPING TO AVOID CONFLICTS WITH (E) BUILDING STRUCTURE AND OTHER BUILDING SERVICES.
10. REFER MECHANICAL SCHEDULES DRAWINGS TO PROVIDE ALL EQUIPMENT, EQUIPMENT ACCESSORIES, AND OPTIONS SPECIFIED.
11. REFER DRAWING C-701 & C-702 TO PROVIDE REQUIRED CONTROLS, CONTROL DEVICES AND CONTROL WIRING ETC.
12. ALL PIPING RUNNING EXPOSED ON THE ROOF SHALL BE SUPPORTED PER MECHANICAL DETAIL AS APPLICABLE.
13. PROVIDE CONDENSATE DRAIN PIPING FOR ALL THE AIR HANDLING UNITS PER MECHANICAL DETAIL.

HILLIARD ARCHITECTS INC. COPYRIGHT

FINAL BID DOCUMENTS

Revisions:	Date

CONSULTANTS:

SYSKA HENNESSY GROUP
A member company of SH Group, Inc.

Syska Hennessy Group, Inc.
425 California Street
Suite 700
San Francisco, CA 94104
Tel: 415.288.9060
Fax: 415.835.0385
www.syska.com

REGISTERED PROFESSIONAL ENGINEER
PRASAD V. MORE
No. M35846
Exp.Mar.31,2014
MECHANICAL
STATE OF CALIFORNIA

ARCHITECT/ENGINEERS:

ESTABLISHED 1988 HILLIARD ARCHITECTS GOING GREEN

HILLIARD ARCHITECTS, INC
251 Post Street, Suite 620
San Francisco, CA 94108-5017
Tel 415 989 6400, Fax 415 989 3056
www.HilliardArchitects.com

Drawing Title: **MECHANICAL PIPING 2ND FLOOR PLAN**

Approved: Project Director

Project Title: **VA PA BLDG 6 LAB RENOVATION**

Location: **VAPAHCS, PALO ALTO CAMPUS 3801 MIRANDA AVE. PALO ALTO, CA 94304**

Date: **04.17.2014** | Checked: **PM** | Drawn: **JP**

Project Number: **640-13-121P**

Building Number: **6**

Drawing Number: **MP102**

Dwg. of

Office of Construction and Facilities Management

Department of Veterans Affairs

VA FORM 08-6231

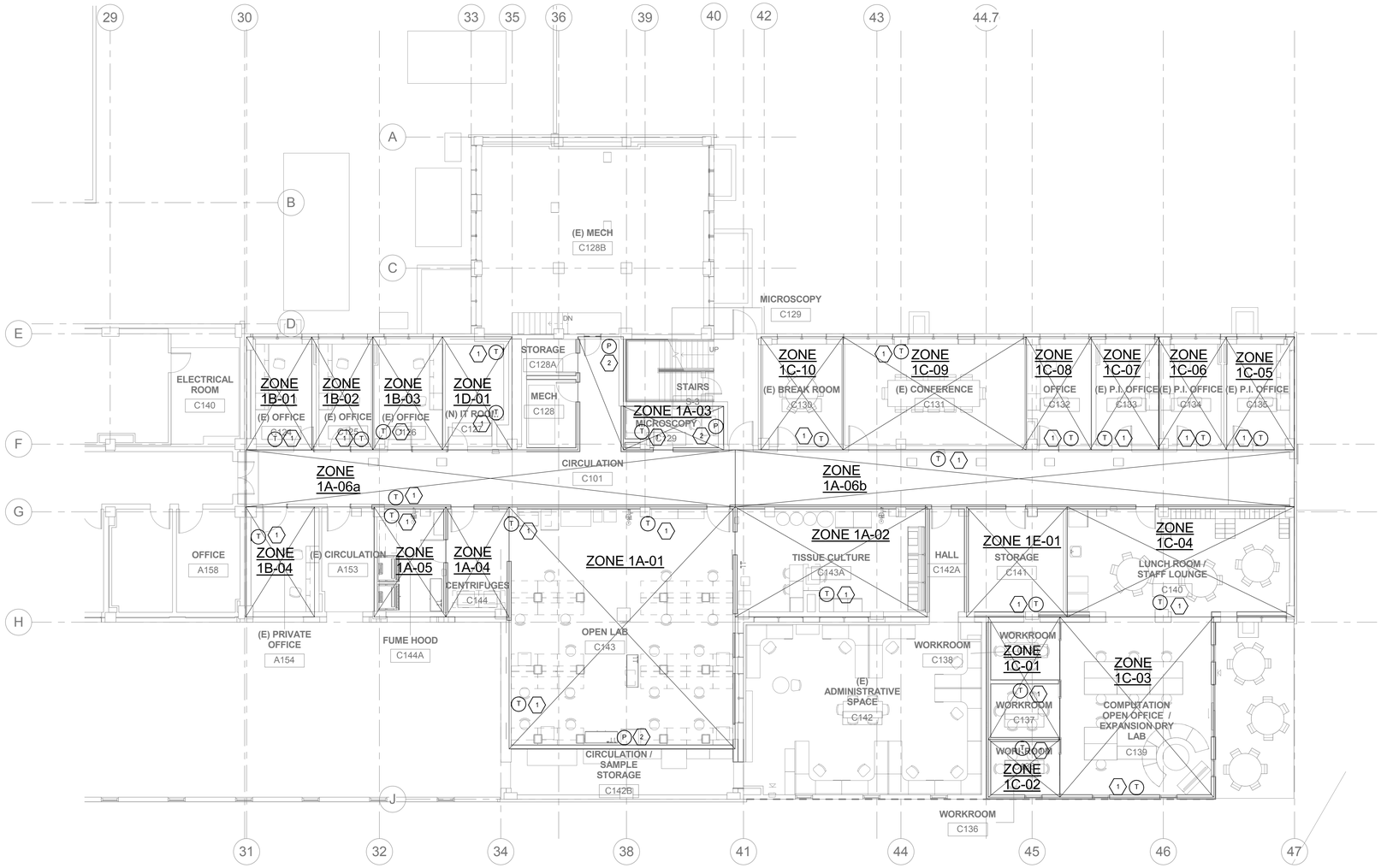

1 FIRST FLOOR LAB ZONE PLAN
1/8" = 1'-0"

KEY NOTES:	SHEET NOTES:
1. WALL MOUNTED WIRED TEMPERATURE SENSOR/THERMOSTAT WITH ALL NECESSARY MOUNTING DEVICES AND ACCESSORIES. TAG EACH TEMPERATURE SENSOR/THERMOSTAT WITH THE TAG OF THE ASSOCIATED FAN COIL UNIT/VAV TERMINAL UNITS. SEE DETAIL 9/M503. 2. WALL MOUNTED WIRED DIFFERENTIAL PRESSURE SENSOR WITH ALL NECESSARY MOUNTING DEVICES. TUBING AND ACCESSORIES. TAG EACH PRESSURE SENSOR WITH THE TAG OF THE ASSOCIATED LAB SPACE OF WHICH SPACE PRESSURE IS BEING MONITORED.	

0' 8' 16' 32' NORTH

FINAL BID DOCUMENTS

HILLIARD ARCHITECTS INC. COPYRIGHT

Revisions:	Date

CONSULTANTS:

SYSKA HENNESSY GROUP
A member company of SH Group, Inc.

Syska Hennessy Group, Inc.
425 California Street
Suite 700
San Francisco, CA 94104
Tel: 415.288.9060
Fax: 415.835.0385
www.syska.com

REGISTERED PROFESSIONAL ENGINEER
PRASAD V. MORE
No. M35846
Exp.Mar.31,2014
MECHANICAL
STATE OF CALIFORNIA

ARCHITECT/ENGINEERS:

ESTABLISHED 1988 HILLIARD ARCHITECTS GOING GREEN

HILLIARD ARCHITECTS, INC
251 Post Street, Suite 620
San Francisco, CA 94108-5017
Tel 415 989 6400, Fax 415 989 3056
www.HilliardArchitects.com

Drawing Title: **MECHANICAL ZONING PLAN - 1ST FLOOR**

Approved: Project Director

Project Title: **VA PA BLDG 6 LAB RENOVATION**

Location: **VAPAHCS, PALO ALTO CAMPUS 3801 MIRANDA AVE. PALO ALTO, CA 94304**

Date: **04.17.2014** | Checked: **PM** | Drawn: **JP**

Project Number: **640-13-121P**

Building Number: **6**

Drawing Number: **M401**

Dwg. of

Office of Construction and Facilities Management

Department of Veterans Affairs

VA FORM 08-6231

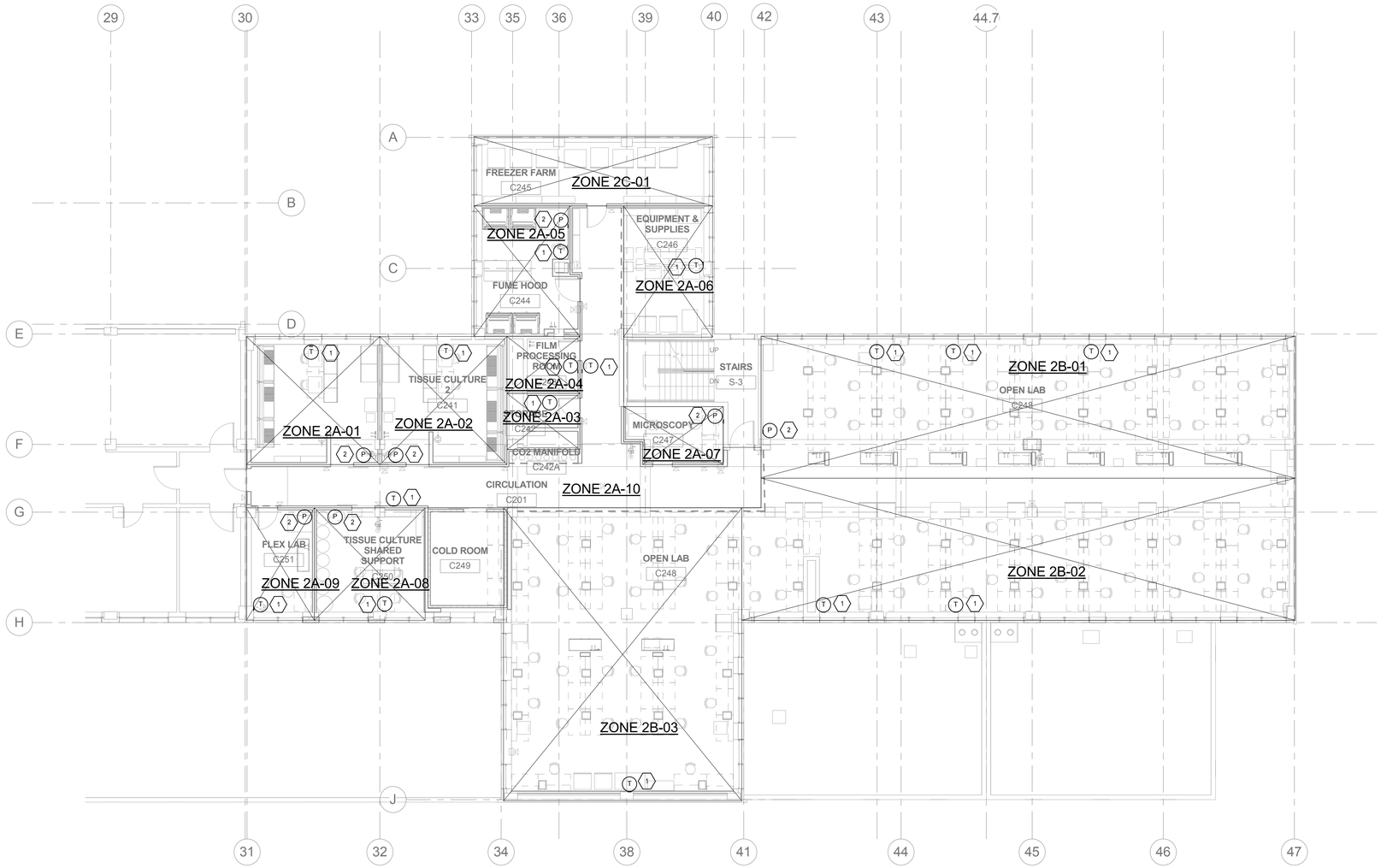

1 SECOND FLOOR ZONE PLAN
1/8" = 1'-0"

KEY NOTES:	SHEET NOTES:
1. WALL MOUNTED WIRED TEMPERATURE SENSOR/THERMOSTAT WITH ALL NECESSARY MOUNTING DEVICES AND ACCESSORIES. TAG EACH TEMPERATURE SENSOR/THERMOSTAT WITH THE TAG OF THE ASSOCIATED FAN COIL UNIT/VAV TERMINAL UNITS. SEE DETAIL 9/M503. 2. WALL MOUNTED WIRED DIFFERENTIAL PRESSURE SENSOR WITH ALL NECESSARY MOUNTING DEVICES, TUBING AND ACCESSORIES. TAG EACH PRESSURE SENSOR WITH THE TAG OF THE ASSOCIATED LAB SPACE OF WHICH SPACE PRESSURE IS BEING MONITORED.	

0' 8' 16' 32' NORTH

FINAL BID DOCUMENTS

HILLIARD ARCHITECTS INC. COPYRIGHT

Revisions: Date

CONSULTANTS:

SYSKA HENNESSY GROUP
A member company of SH Group, Inc.

Syska Hennessy Group, Inc.
425 California Street
Suite 700
San Francisco, CA 94104
Tel: 415.288.9060
Fax: 415.835.0385
www.syska.com

REGISTERED PROFESSIONAL ENGINEER
PIRASAD V. MORE
No. M35846
Exp.Mar.31,2014
MECHANICAL
STATE OF CALIFORNIA

ARCHITECT/ENGINEERS:

ESTABLISHED 1988 HILLIARD ARCHITECTS GOING GREEN

HILLIARD ARCHITECTS, INC
251 Post Street, Suite 620
San Francisco, CA 94108-5017
Tel 415 989 6400, Fax 415 989 3056
www.HilliardArchitects.com

Drawing Title: MECHANICAL ZONING PLAN - 2ND FLOOR	Project Title: VA PA BLDG 6 LAB RENOVATION		Project Number: 640-13-121P
			Building Number: 6
Approved: Project Director	Location: VAPAHCS, PALO ALTO CAMPUS, 3801 MIRANDA AVE. PALO ALTO, CA 94304		Drawing Number: M402
	Date: 04.17.2014	Checked: PM	Drawn: JP
			Dwg. of

Office of Construction and Facilities Management
Department of Veterans Affairs

VA FORM 08-6231

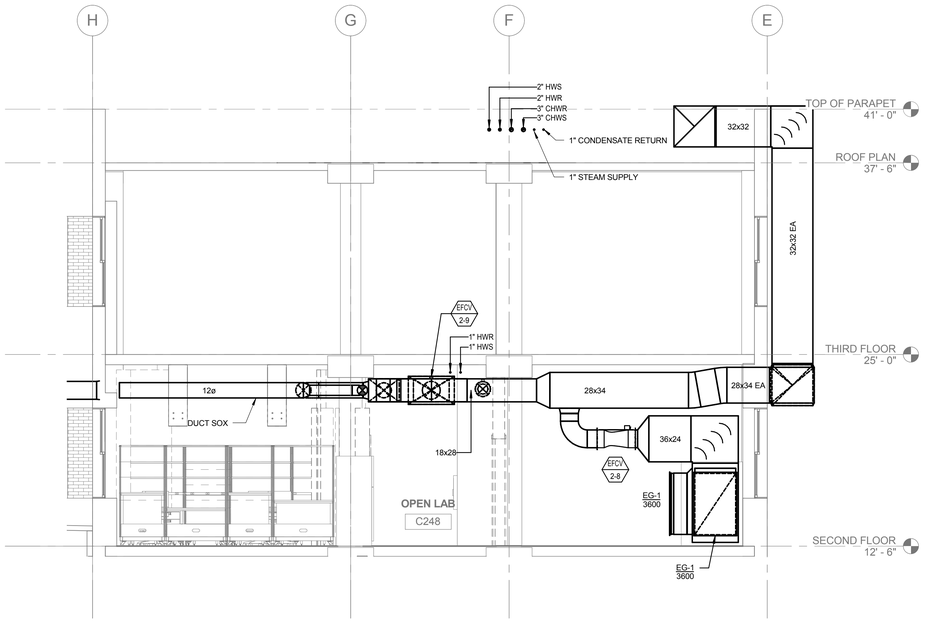

2 SECTION (SECOND FLOOR OPEN LAB #2)
1/4" = 1'-0"

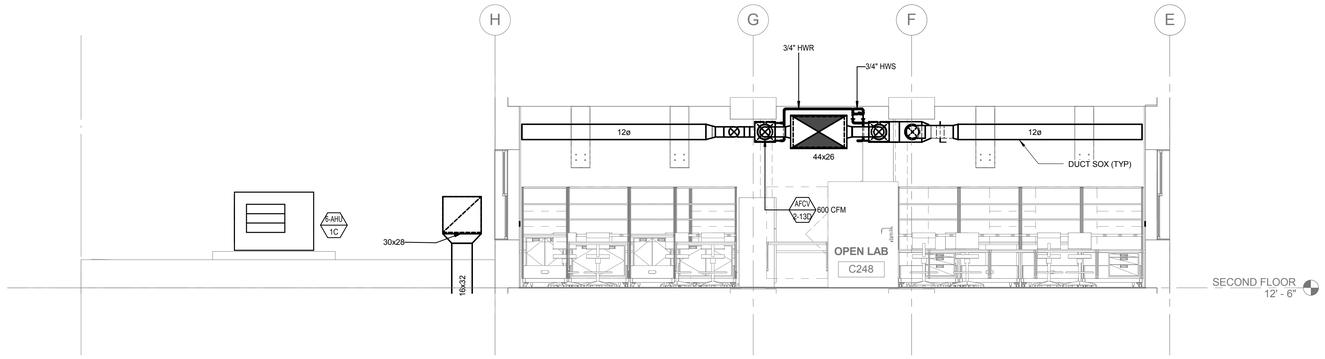

1 SECTION (SECOND FLOOR OPEN LAB)
1/4" = 1'-0"

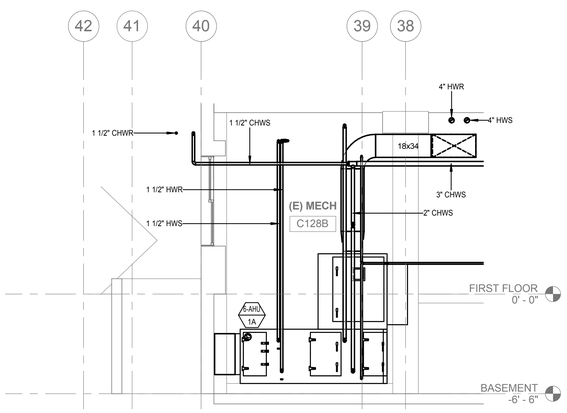

5 SECTION (6-AHU-1A)
1/4" = 1'-0"

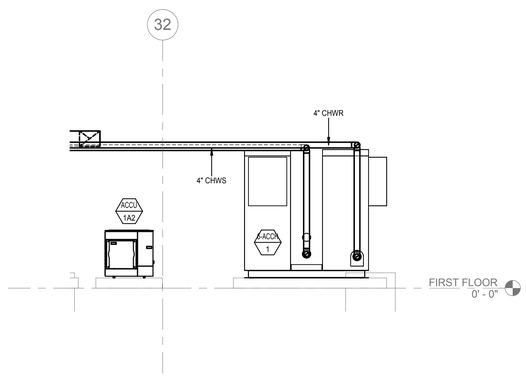

4 SECTION (6-ACCH-1)
1/4" = 1'-0"

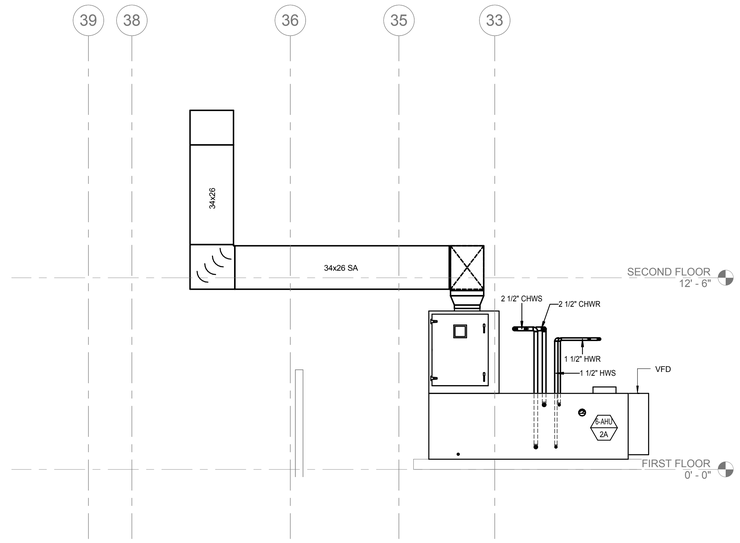

3 SECTION (6-AHU-2A)
1/4" = 1'-0"

HILLIARD ARCHITECTS INC. COPYRIGHT

FINAL BID DOCUMENTS

Revisions:	Date

CONSULTANTS:

SYSKA HENNESSY GROUP
A member company of SH Group, Inc.

Syska Hennessy Group, Inc.
425 California Street
Suite 700
San Francisco, CA 94104
Tel: 415.288.9060
Fax: 415.835.0385
www.syska.com

REGISTERED PROFESSIONAL ENGINEER
PIRASAD V. MORE
No. M35846
Exp.Mar.31,2014
MECHANICAL
STATE OF CALIFORNIA

ARCHITECT/ENGINEERS:

ESTABLISHED 1988 HILLIARD ARCHITECTS GOING GREEN

HILLIARD ARCHITECTS, INC
251 Post Street, Suite 620
San Francisco, CA 94108-5017
Tel 415 989 6400, Fax 415 989 3056
www.HilliardArchitects.com

Drawing Title
MECHANICAL SECTIONS

Approved: Project Director

Project Title
VA PA BLDG 6 LAB RENOVATION

Location
VAPAHCS, PALO ALTO CAMPUS
3801 MIRANDA AVE. PALO ALTO, CA 94304

Date **04.17.2014** | Checked **PVM** | Drawn **JP**

Project Number **640-13-121P**

Building Number **6**

Drawing Number **M403**

Dwg. of

Office of Construction and Facilities Management

Department of Veterans Affairs

VA FORM 08-6231

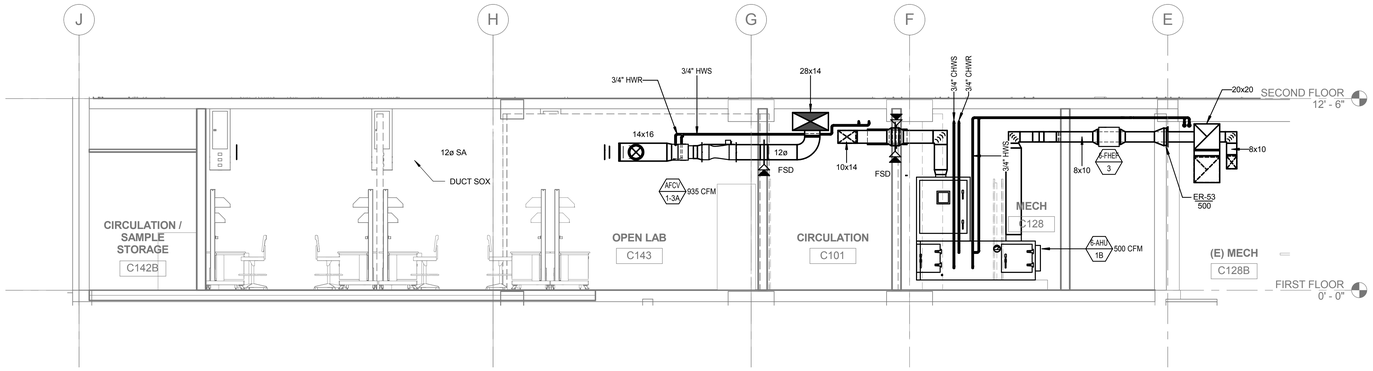

2 SECTION (6-AHU-1B & FIRST FLOOR OPEN LAB)
1/4" = 1'-0"

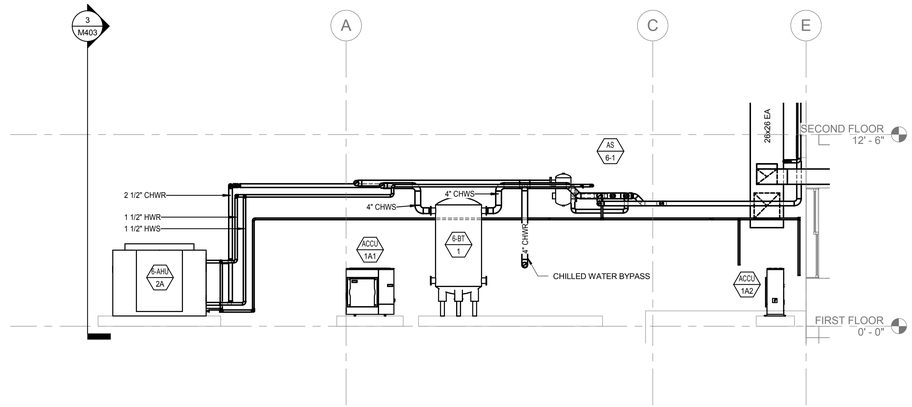

1 SECTION (6-AHU-2A & 6-BT-1)
1/4" = 1'-0"

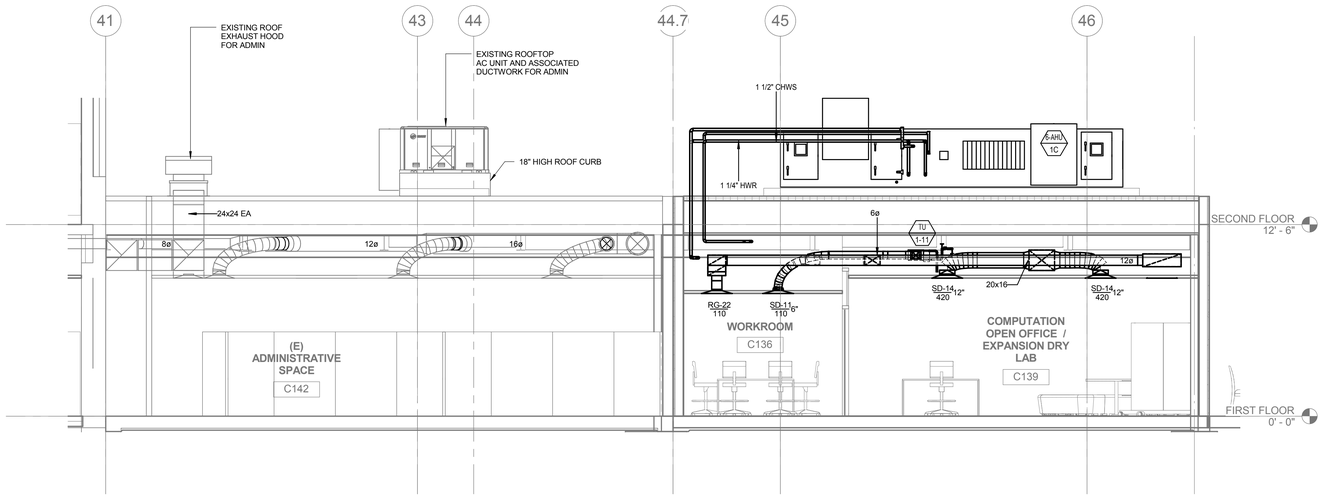

4 SECTION (6-AHU-1C)
1/4" = 1'-0"

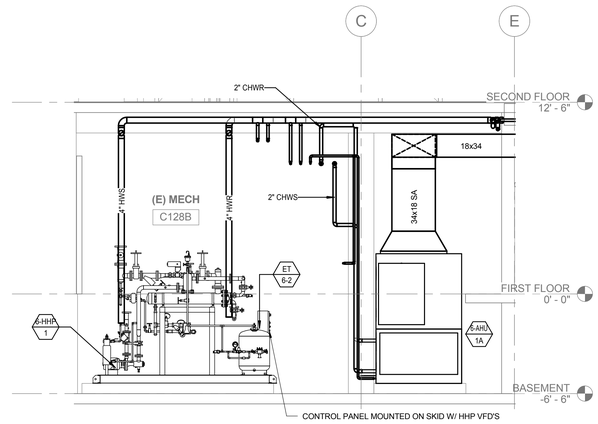

3 SECTION (6-AHU-1A & 6-SWHX-1)
1/4" = 1'-0"

HILLIARD ARCHITECTS INC. COPYRIGHT

FINAL BID DOCUMENTS

Revisions:	Date

CONSULTANTS:

SYSKA HENNESSY GROUP
A member company of SH Group, Inc.

Syska Hennessy Group, Inc.
425 California Street
Suite 700
San Francisco, CA 94104
Tel: 415.288.9060
Fax: 415.835.0385
www.syska.com

REGISTERED PROFESSIONAL ENGINEER
PRASAD V. MORE
No. M35846
Exp.Mar.31,2014
MECHANICAL
STATE OF CALIFORNIA

ARCHITECT/ENGINEERS:

ESTABLISHED 1988 HILLIARD ARCHITECTS GOING GREEN

HILLIARD ARCHITECTS, INC
251 Post Street, Suite 620
San Francisco, CA 94108-5017
Tel 415 989 6400, Fax 415 989 3056
www.HilliardArchitects.com

Drawing Title: **MECHANICAL SECTIONS**

Approved: Project Director

Project Title: **VA PA BLDG 6 LAB RENOVATION**

Location: **VAPAHCS, PALO ALTO CAMPUS**
3801 MIRANDA AVE. PALO ALTO, CA 94304

Date: **04.17.2014** | Checked: **PVM** | Drawn: **JP**

Project Number: **640-13-121P**

Building Number: **6**

Drawing Number: **M404**

Dwg. of

Office of Construction and Facilities Management

Department of Veterans Affairs

VA FORM 08-6231

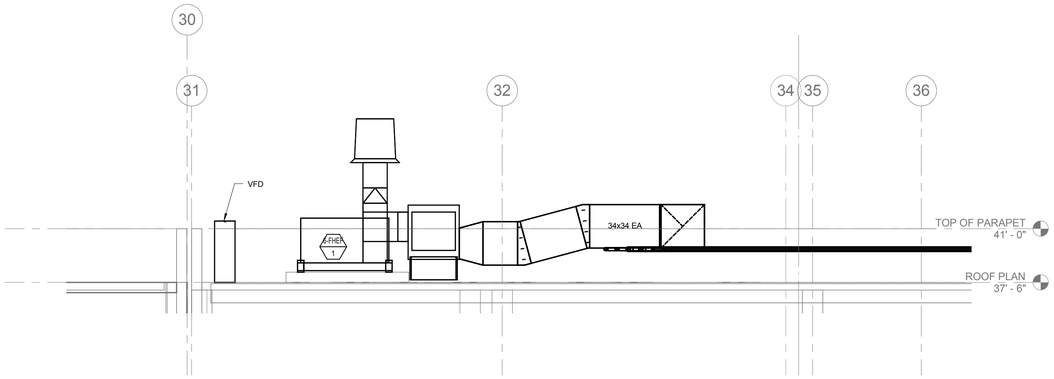

1 SECTION (ROOFTOP EAST)
1/4" = 1'-0"

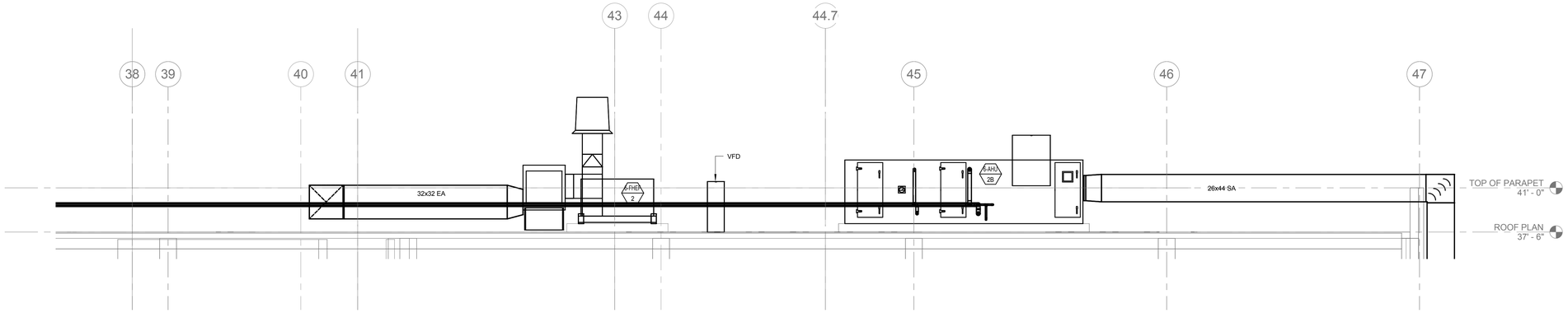

2 SECTION (ROOFTOP WEST)
1/4" = 1'-0"

HILLIARD ARCHITECTS INC. COPYRIGHT

FINAL BID DOCUMENTS

Revisions:	Date

CONSULTANTS:

SYSKA HENNESSY GROUP
A member company of SH Group, Inc.

Syska Hennessy Group, Inc.
425 California Street
Suite 700
San Francisco, CA 94104
Tel: 415.288.9060
Fax: 415.835.0385
www.syska.com

REGISTERED PROFESSIONAL ENGINEER
PRASAD V. MORE
No. M35846
Exp.Mar.31,2014
MECHANICAL
STATE OF CALIFORNIA

ARCHITECT/ENGINEERS:

ESTABLISHED 1988 HILLIARD ARCHITECTS GOING GREEN

HILLIARD ARCHITECTS, INC
251 Post Street, Suite 620
San Francisco, CA 94108-5017
Tel 415 989 6400, Fax 415 989 3056
www.HilliardArchitects.com

Drawing Title: **MECHANICAL SECTIONS**

Approved: Project Director

Project Title: **VA PA BLDG 6 LAB RENOVATION**

Location: **VAPAHCS, PALO ALTO CAMPUS**
3801 MIRANDA AVE. PALO ALTO, CA 94304

Date: **04.17.2014** | Checked: **PVM** | Drawn: **JP**

Project Number: **640-13-121P**

Building Number: **6**

Drawing Number: **M405**

Dwg. of

Office of Construction and Facilities Management

Department of Veterans Affairs

VA FORM 08-6231

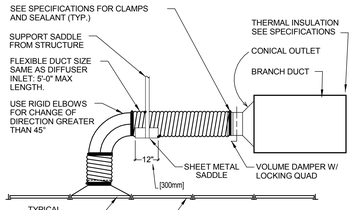

NOTE:
THE USE OF FLEXIBLE AIR DUCT CONNECTORS ARE NOT PERMITTED FOR THE DEDICATED AHU SERVING THE SURGICAL SUITE.

FLEXIBLE AIR DUCT CONNECTOR (10)

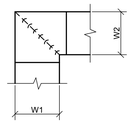

NOTE:

1. ALL VANE ELBOWS SHALL BE CONSTRUCTED AND INSTALLED AS DETAILED BY SMACNA.
2. WHEN W1 DOES NOT EQUAL W2, VANE SHALL BE SINGLE THICKNESS VANE TYPE REGARDLESS OF W DIMENSION.
3. ALL SINGLE THICKNESS VANES SHALL HAVE A 2" [50mm] RADIUS, 1 1/2" [40mm] MAXIMUM SPACE BETWEEN VANES AND A 3/4" [20mm] TRAILING EDGE.
4. WHEN W EQUALS W2 AND W1 IS GREATER THAN 20" [500mm] VANES SHALL BE DOUBLE VANE TYPE.

DUCTWORK SQUARE VANE ELBOWS (7)

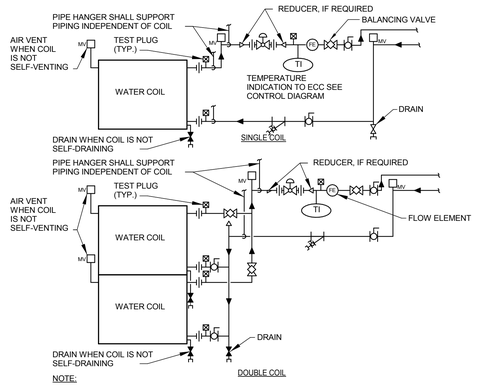

NOTE:

1. WHEN COIL IS INCLUDED IN CASING MOUNTED ON VIBRATION ISOLATORS THE FIRST 2 HANGERS FOR EACH PIPE SHALL BE SPRING & NEOPRENE TYPE. TYPE "H" FOR 4" [100mm] : PIPE & SMALLER. TYPE "H-P" FOR 5" [125mm] : PIPE & LARGER.
2. PIPING SHALL BE INSTALLED IN SUCH MANNER THAT IT WILL NOT BLOCK THE SWING OR USE OF ACCESS DOORS OR PANELS; NEITHER SHALL IT BLOCK THE SERVICING OF FILTERS, VALES, OR EQUIPMENT.
3. THE FLOW ELEMENT MAY BE INSTALLED IN THE SUPPLY PIPING IF THE REQUIRED MINIMUM UPSTREAM AND DOWNSTREAM DIMENSIONS CANNOT BE OBTAINED IN THE RETURN PIPING.

WATER COILS - PIPING CONNECTIONS (4)

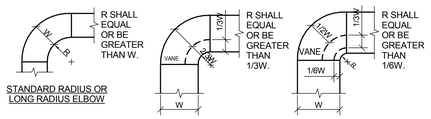

NOTE:

1. THE INTERIOR SURFACE OF ALL RADIUS ELBOWS SHALL BE MADE ROUND.
2. ALL STANDARD RADIUS ELBOWS CAN BE SUBSTITUTED WITH SHORT RADIUS ELBOWS. ALL SHORT RADIUS ELBOWS SHALL HAVE VANES. VANES SHALL BE CONSTRUCTED, SUPPORTED AND FASTENED AS RECOMMENDED BY SMACNA.

DUCTWORK RADIUS ELBOWS (1)

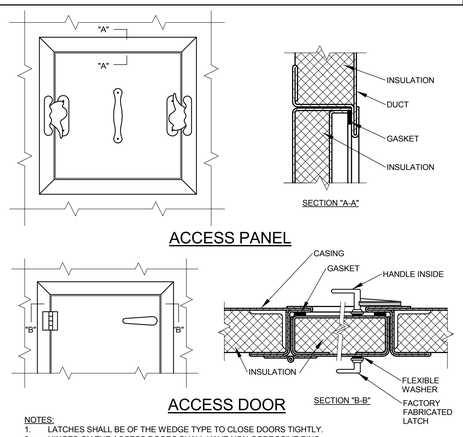

NOTES:
1. LATCHES SHALL BE OF THE WEDGE TYPE TO CLOSE DOORS TIGHTLY.
2. HINGES ON THE ACCESS DOORS SHALL HAVE NON-CORROSIVE PINS.
3. SEE SMACNA 2005, FIGURE 9-15

ACCESS PANEL AND DOOR DETAIL (11)

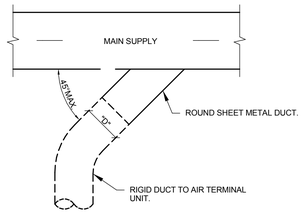

SUPPLY DUCT TAKEOFF - AIR TERMINAL UNIT (8)

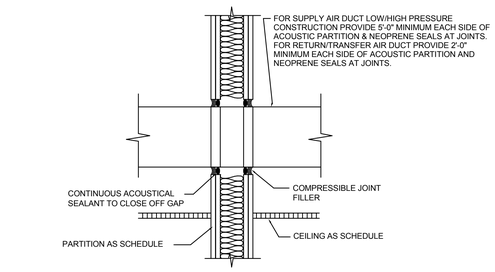

PENETRATION OF ACOUSTICAL PARTITIONS BY DUCTWORK SHALL BE ACOUSTICALLY SEALED AS SHOWN. ANY GAP LARGER THAN 1/2" SHALL BE COVERED WITH GYPSUM BOARD. LAPPED A MINIMUM OF 2" AND SCREWED BEFORE USING ACOUSTICAL SEALANT.

DUCT THROUGH ACOUSTICAL PARTITION (5)

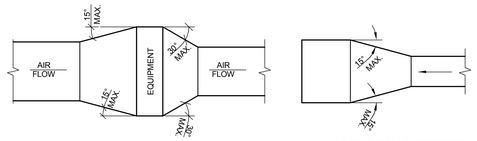

TYPICAL DUCTWORK TRANSITION WITH EQUIPMENT MOUNTED IN DUCT PLAN OR SIDE VIEW

TYPICAL DUCTWORK TRANSITION PLAN OR SIDE VIEW

NOTE:
UNLESS OTHERWISE INDICATED ON PLANS, MAXIMUM ANGLES SHOWN SHALL APPLY.

DUCTWORK TRANSITIONS (WITH EQUIPMENT MOUNTED IN DUCT) (2)

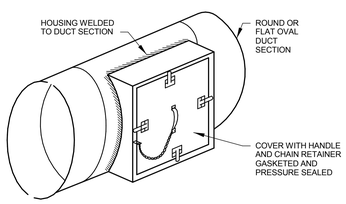

ACCESS SECTION FOR ROUND/OVAL DUCT (12)

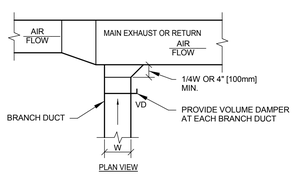

EXHAUST OR RETURN BRANCH DUCTWORK (9)

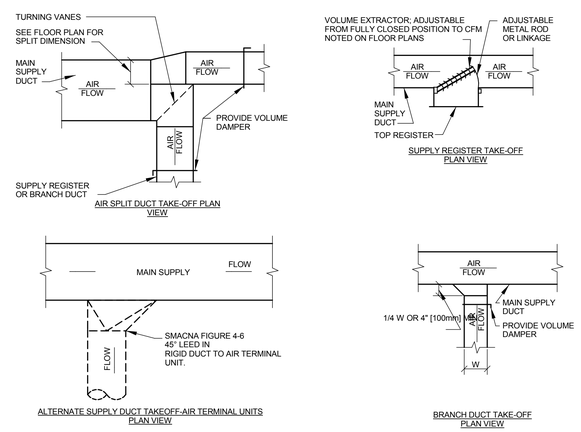

SUPPLY DUCTWORK TAKE-OFFS (6)

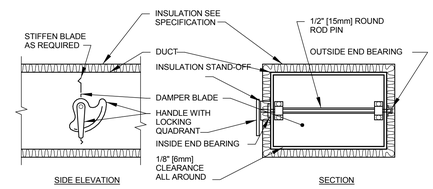

NOTE:

1. DELETE INSULATION STAND-OFF ON DUCTWORK WITHOUT EXTERIOR INSULATION.
2. DETAIL SHOWS SINGLE BLADE DAMPER. DAMPER INSTALLATION SHALL BE SIMILAR FOR MULTI-BLADE DAMPERS & ROUND DAMPERS.

VOLUME DAMPER DETAIL (3)

FINAL BID DOCUMENTS

HILLIARD ARCHITECTS INC. COPYRIGHT

Revisions:	Date

CONSULTANTS:

SYSKA HENNESSY GROUP
A member company of SH Group, Inc.

Syska Hennessy Group, Inc.
425 California Street
Suite 700
San Francisco, CA 94104
Tel: 415.288.9060
Fax: 415.835.0385
www.syska.com

REGISTERED PROFESSIONAL ENGINEER — PIRSAD V. MORE — No. M35846 — Exp.Mar.31,2014 — MECHANICAL — STATE OF CALIFORNIA

ARCHITECT/ENGINEERS:

ESTABLISHED 1988 HILLIARD ARCHITECTS GOING GREEN

HILLIARD ARCHITECTS, INC
251 Post Street, Suite 620
San Francisco, CA 94108-5017
Tel 415 989 6400, Fax 415 989 3056
www.HilliardArchitects.com

Drawing Title: **MECHANICAL DETAILS**	Project Title: **VA PA BLDG 6 LAB RENOVATION**	Project Number: **640-13-121P**	Office of Construction and Facilities Management
		Building Number: **6**	
Approved: Project Director	Location: **VAPAHCS, PALO ALTO CAMPUS 3801 MIRANDA AVE. PALO ALTO, CA 94304**	Drawing Number: **M501**	Department of Veterans Affairs
	Date: **04.17.2014** / Checked: **PM** / Drawn: **JP**	Dwg. of	

VA FORM 08-6231

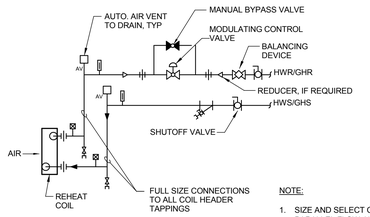

NOTE:

1. SIZE AND SELECT COIL FOR PARALLEL FLOW AND MINIMUM TUBE WATER VELOCITY OF 3.0 FEET PER SECOND

REHEAT COIL (HOT WATER) - PIPING CONNECTIONS (9)

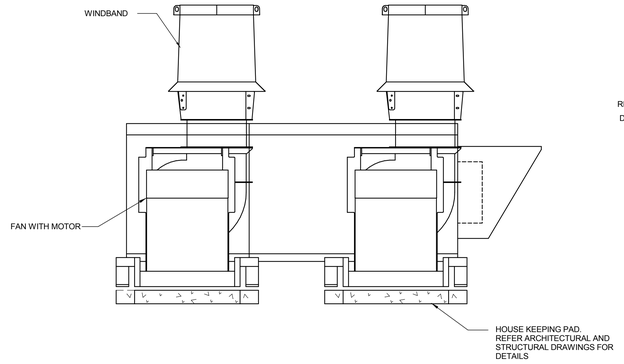

END VIEW

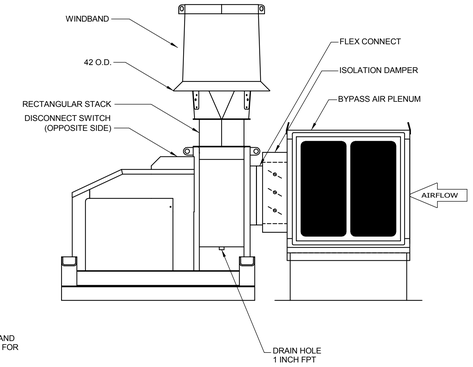

ELEVATION

FUME EXHAUST FAN WITH STACK ON ROOF DETAIL (4)

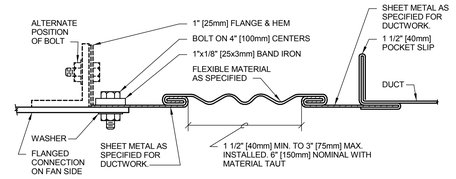

RECTANGULAR FLEXIBLE CONNECTION

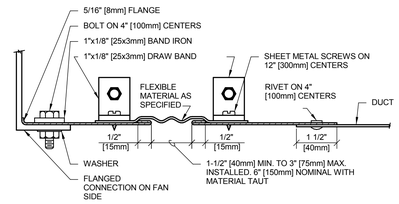

ROUND FLEXIBLE CONNECTION

FLEXIBLE DUCT CONNECTIONS (1)

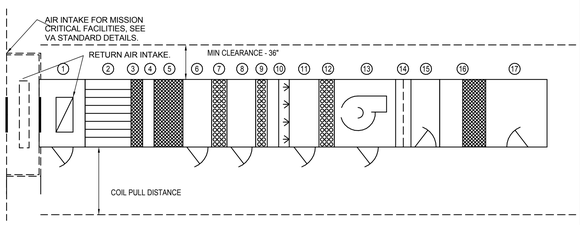

	AIR HANDLING UNIT	ITEM	MINIMUM OUTSIDE AIR TWO BEDS OF FILTERS VAV	MINIMUM OUTSIDE AIR THREE BEDS OF FILTERS CV	100% OUTSIDE AIR TWO BEDS OF FILTERS CV	100% OUTSIDE AIR THREE BEDS OF FILTERS CV
*	MIXING BOX	1	YES	YES	NO	NO
*	BLENDER SECTION	2	YES	YES	NO	NO
	PRE-FILTERS (SIDE ACCESS)	3	YES	YES	YES	YES
	INSPECTION SECTION, SMALL	4	YES	YES	YES	YES
	AFTER FILTER (SIDE ACCESS)	5	YES	YES	YES	YES
	ACCESS SECTION, MED-LARGE	6	YES	YES	YES	YES
*	HEAT RECOVERY COIL	7	NO	NO	YES	YES
*	ACCESS SECTION, MED-LARGE	8	NO	NO	YES	YES
*	PRE-HEAT COIL	9	YES	YES	YES	YES
*	INSPECTION SECTION,SMALL	10	YES	YES	YES	YES
	HUMIDIFIER	11	YES	YES	YES	YES
	COOLING COIL	12	YES	YES	YES	YES
	FAN	13	YES	YES	YES	YES
*	DIFFUSER PLATE	14	NO	NO	NO	YES
*	ACCESS SECTION,MED-LARGE	15	NO	NO	YES	YES
*	HEPA FILTER	16	NO	NO	NO	YES
*	DISCHARGE PLENUM (VERTICAL)	17	YES	YES	YES	YES
* AS REQUIRED						

NOTE:

1. ACCESS DOORS SHALL BE GASKETED AND HINGED TO OPEN AGAINST FAN OPERATING PRESSURE TO PREVENT AIR LEAKAGE.
2. MINIMUM ACCESS DOOR WIDTH SHALL BE 24" [600mm].
3. ACCESS DOOR HEIGHT SHALL BE DETERMINED BY UNIT CASING BUT NOT TO EXCEED 6'-0" [1800mm].
4. ACCESS DOORS ON FAN SUCTION SHALL OPEN OUTWARD.
5. ACCESS DOORS ON FAN DISCHARGE SIZE SHALL OPEN INWARD.

ACCESS DOOR SWING DETAIL FOR AIR HANDLING UNITS (10)

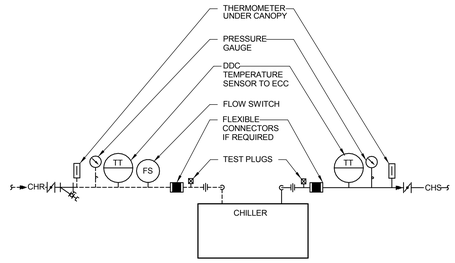

AIR COOLED CHILLER - PIPING CONNECTIONS (7)

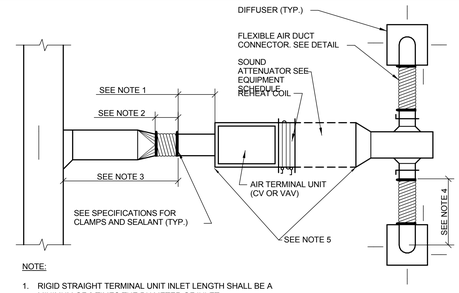

NOTE:

1. RIGID STRAIGHT TERMINAL UNIT INLET LENGTH SHALL BE A MINIMUM OF 3 TIMES THE DIAMETER OF INLET
2. A FLEXIBLE AIR DUCT CONNECTOR IS NOT MANDATORY FOR INLET TO THIS BOX, BUT ALLOWED TO ACCOMMODATE MINOR OFFSETS. MAXIMUM LENGTH 3'-0" [900mm].
3. A BRANCH DUCT SERVING AN INDIVIDUAL BOX MAY BE THE SAME SIZE AS THE BOX INLET, PROVIDED THE EQUIVALENT LENGTH OF THE BRANCH DUCT, AS SHOWN, DOES NOT EXCEED 10 FEET (3 METERS). FOR LONGER LENGTHS, INCREASE THE DUCT SIZE AND PROVIDE A DUCT TRANSITION TO MAINTAIN THE DUCT STATIC PRESSURE DROP AT OR BELOW 0.2"/100' [1.64Pa/m].
4. FLEXIBLE AIR DUCT CONNECTORS, WHEN USED FROM TERMINAL UNIT SUPPLY AIR DUCT TO DIFFUSER, SHALL NOT EXCEED 5'-0" [1500mm]. USE RIGID ELBOWS FOR CHANGE OF DIRECTION GREATER THAN 45°.
5. COMPONENT ARRANGEMENT MAY VARY BY MANUFACTURER. PROVIDE INSULATION W/VAPOR BARRIER FOR CONNECTING DUCT SECTIONS.
6. USE OF THE FLEXIBLE AIR DUCT CONNECTORS ARE NOT PERMITTED FOR THE DEDICATED AHU SERVING THE SURGICAL SUITE.

DUCT CONNECTIONS - AIR TERMINAL UNITS (5)

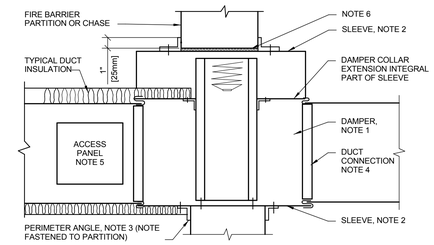

NOTE:

1. A VERTICAL DAMPER IS SHOWN. HORIZONTAL DAMPER INSTALLATION, 1S SIMILAR. FOLLOW DAMPER MANUFACTURER'S INSTRUCTIONS, INCLUDING FASTENER OPTIONS AND GAGES FOR SLEEVE AND PERIMETER ANGLES. FIRE DAMPERS MUST BE INSTALLED IN THE PARTITION OR FLOOR AND NOT OUTSIDE THE PENETRATION.
2. GALVANIZED SLEEVE: GAGE NOT LESS THAN CONNECTING DUCT. FASTEN SLEEVE TO DAMPER FRAME AND TO PERIMETER ANGLES.

   PERIMETER ANGELS: GALVANIZED STEEL, NOT LESS THAN 1 1/2"x1 1/2" [40x40mm], 14 GAGE, TO PROVIDE 1" [25mm]
3. MINIMUM OVERLAP OF OPENING ON ALL 4 SIDES.

   BREAKAWAY DUCT CONNECTION: CONTRACTOR'S OPTION OF TYPES SHOWN IN SMACNA.
4. ACCESS PANELS: SIZE AND LOCATION TO PERMIT SERVICING THE FUSIBLE LINK OR LINKS.

   PROVIDE 1/4" TO 1/2" [6 TO 15mm] CLEARANCE ON HEIGHT AND WIDTH. FILL OPEN SPACE WITH ROCK WOOL FIRESTOP
5. FIBER.

   ALL DUCT WORK RISERS WHICH ARE RUN EXPOSED, SUCH AS THRU ATTIC FLOORS AND MECHANICAL ROOM FLOORS,
6. SHALL BE PROVIDED WITH 3" [75mm] HIGH CONCRETE CURB AROUND OPENING FOR DUCT.

SECTION THRU FIRE DAMPER INSTALLATION (2)

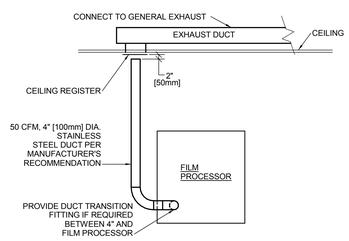

NOTE:

1. USE THIS DETAIL ONLY IF THE FILM PROCESSING INVOLVES USE OF CHEMICALS.

DUCTWORK CONNECTION - FILM PROCESSOR (8)

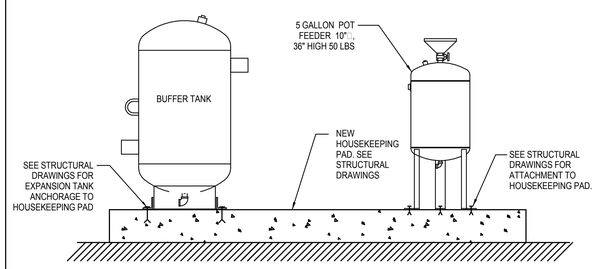

BUFFER TANK & CHEMICAL POT FEEDER MOUNTING DETAIL (6)

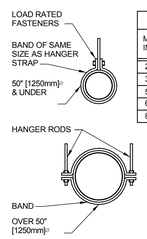

HANGER STRAPS OR RODS			
MAX. DUCT IN. [mm]	QUANTITY/SIZE IN. [mm]	MAX. LOAD LBS. [kg]	MAX SPACING IN. [mm]
26 [650]	ONE 1 [25] x 22 GA STRAP	260 [119]	144 [3600]
36 [900]	ONE 1 [25] x 18 GA STRAP	420 [190]	144 [3600]
50 [1250]	ONE 1 [25] x 16 GA STRAP	700 [317]	144 [3600]
60 [1500]	TWO 3/8 [10] RODS	1320 [598]	144 [3600]
84 [2100]	TWO 1/2 [13] RODS	2500 [1133]	144 [3600]

NOTE:
TABULATED DATA FROM SMACNA ALLOWS FOR DUCT REINFORCING AND INSULATION, BUT NO EXTERNAL LOAD.

ROUND DUCT HANGERS (3)

FINAL BID DOCUMENTS

HILLIARD ARCHITECTS INC. COPYRIGHT

Revisions:	Date

CONSULTANTS:

SYSKA HENNESSY GROUP
A member company of SH Group, Inc.

Syska Hennessy Group, Inc.
425 California Street
Suite 700
San Francisco, CA 94104
Tel: 415.288.9060
Fax: 415.835.0385
www.syska.com

REGISTERED PROFESSIONAL ENGINEER — PRASAD V. MORE — No. M35846 — Exp.Mar.31,2014 — MECHANICAL — STATE OF CALIFORNIA

ARCHITECT/ENGINEERS:

ESTABLISHED 1988 HILLIARD ARCHITECTS GOING GREEN

HILLIARD ARCHITECTS, INC
251 Post Street, Suite 620
San Francisco, CA 94108-5017
Tel 415 989 6400, Fax 415 989 3056
www.HilliardArchitects.com

Drawing Title	**MECHANICAL DETAILS**
Approved: Project Director	
Project Title	**VA PA BLDG 6 LAB RENOVATION**
Location	**VAPAHCS, PALO ALTO CAMPUS 3801 MIRANDA AVE. PALO ALTO, CA 94304**
Date	**04.17.2014**
Checked	**PM**
Drawn	**JP**
Project Number	**640-13-121P**
Building Number	**6**
Drawing Number	**M502**
Dwg.	of

Office of Construction and Facilities Management

Department of Veterans Affairs

VA FORM 08-6231

PIPE ANCHOR SCHEDULE										
D		P		C		N		S		BOLT PATTERN
IN	MM	IN	MM	IN	MM	IN	MM	IN	MM	
4"	102	5/8"	16	3/4"	19	4"	102	7/8"	19	
3"	76	1/2"	13	1/2"	13	4"	102	5/8"	16	
2 1/2"	64	3/8"	10	3/8"	10	4"	102	5/8"	16	
2"	51	3/8"	10	3/8"	10	4"	102	5/8"	16	
1 1/2"	38	3/8"	10	1/4"	6	4"	102	1/2"	13	

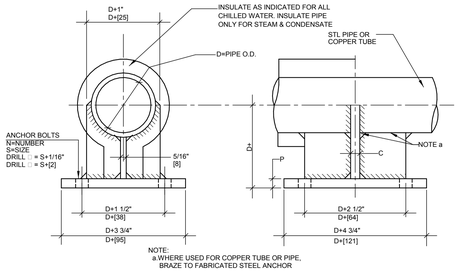

SMALL PIPE ANCHOR 1-1/2"-4" (10)

HOT WATER PIPE SIZING SCHEDULE	
GPM	PIPE SIZE (IN.)
UP TO 4.0	3/4"
5-10	1"
11-17	1 1/4"
18-27	1 1/2"
28-58	2"
59-90	2 1/2"
91-125	3"
126-220	4"
221-500	6"
501-1800	8"
1801-2500	10"
2501-3500	12"

* MINIMUM HEATING HOT WATER PIPE SIZE BASED ON 180 DEGREE HOT WATER INLET (BASED ON 2.5 FT / 100 FT FRICTION LOSS AND 8 FPS MAXIMUM VELOCITY)

HOT WATER PIPE SIZING SCHEDULE (7)

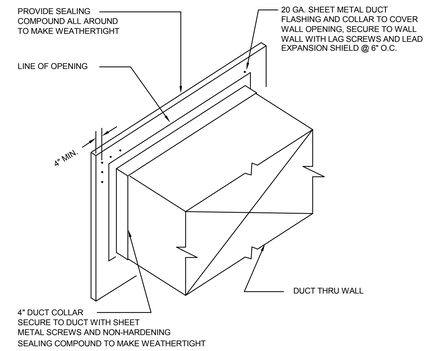

DUCT THROUGH WALL (4)

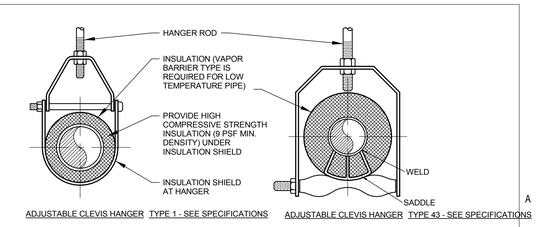

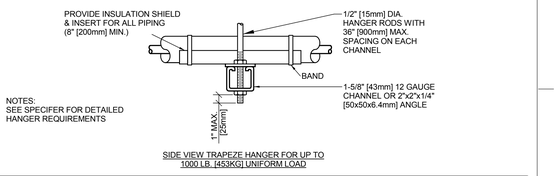

MAXIMUM PIPE/TUBING SUPPORT SPACING																				
NOM. SIZE	IN. [mm]	THRU 3/4 THRU [20]	1 [25]	1 1/4 [32]	1 1/2 [40]	2 [50]	2 1/2 [65]	3 [75]	4 [100]	5 [125]	6 [150]	8 [200]	10 [250]	12 [300]	14 [350]	16 [400]	18 [450]	20 [500]	24 [600]
PIPE	FT. [mm]	7 [2100]	7 [2100]	7 [2100]	9 [2700]	10 [3000]	11 [3400]	12 [3700]	14 [4100]	16 [4900]	17 [5200]	19 [5800]	22 [6700]	23 [7000]	25 [7600]	27 [8200]	28 [8500]	30 [9100]	32 [9600]
TUBING	FT. [mm]	5 FT [1500]	6 [1800]	7 [2100]	8 [2400]	8 [2400]	9 [2700]	10 [3000]	12 [3700]	13 [4000]	14 [4100]	16 [4900]	- -	- -	- -	- -	- -	- -	- -

NOTE: FOR TRAPEZE HANGER TAKE SPACING OF SMALLEST SIZE ON TRAPEZE.

PIPE HANGERS (1)

PIPE ANCHOR SCHEDULE														
D		L		P		T		E		N		S		BOLT PATTERN
IN	MM	IN	MM	IN	MM	IN	MM	IN	MM	IN	MM	IN	MM	
6"	152	8 1/2"	216	3/4"	19	3/8"	10	1/4"	6	4"	102	7/8"	22	
8"	203	10"	254	3/4"	19	1/2"	13	1/4"	6	4"	102	7/8"	22	
10"	254	12"	305	3/4"	19	1/2"	13	1/4"	6	4"	102	7/8"	22	
12"	305	14"	356	3/4"	19	1/2"	13	1/4"	6	4"	102	7/8"	22	
14"	356	16"	406	3/4"	19	1/2"	13	1/4"	13	4"	102	7/8"	22	
16"	406	18"	457	3/4"	19	1/2"	13	1/2"	13	4"	102	7/8"	22	
18"	457	20"	508	1"	25	5/8"	16	1/2"	13	6"	152	1"	25	

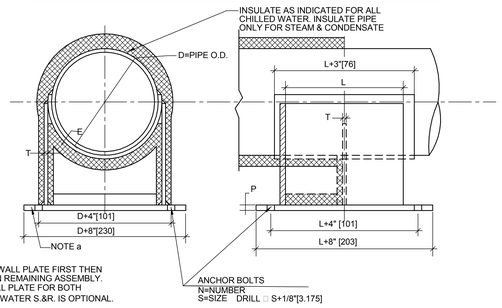

LARGE PIPE ANCHOR 6"-18" (11)

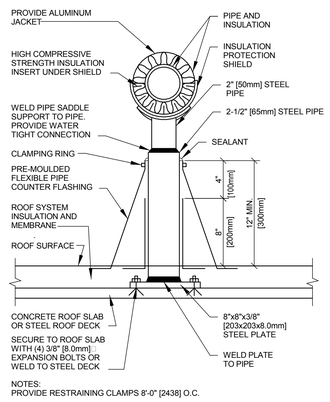

DETAIL FOR SUPPORTING PIPE ON ROOF (8)

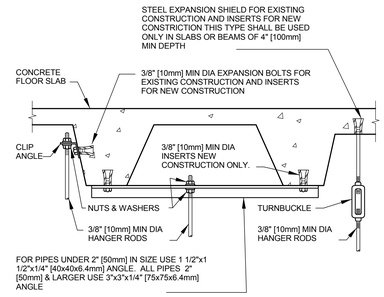

SECURING HANGER RODS IN CONCRETE (5)

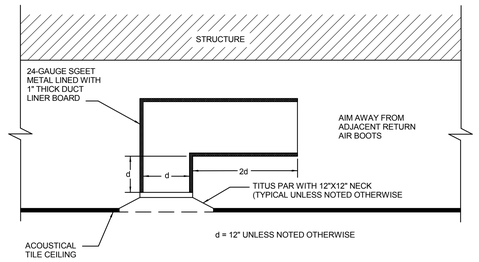

RETURN AIR DUCT BOOT (2)

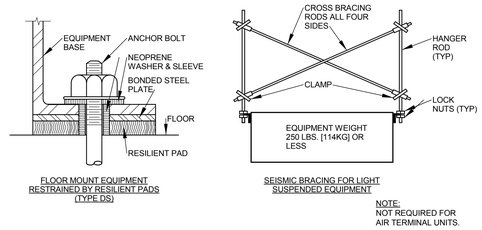

SEISMIC BRACING FOR EQUIPMENT (12)

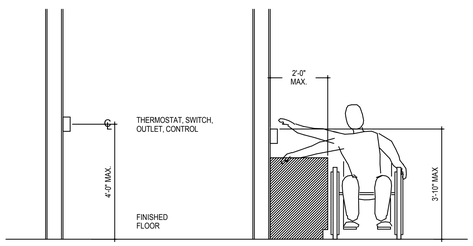

TYPICAL THERMOSTAT DETAIL (9)

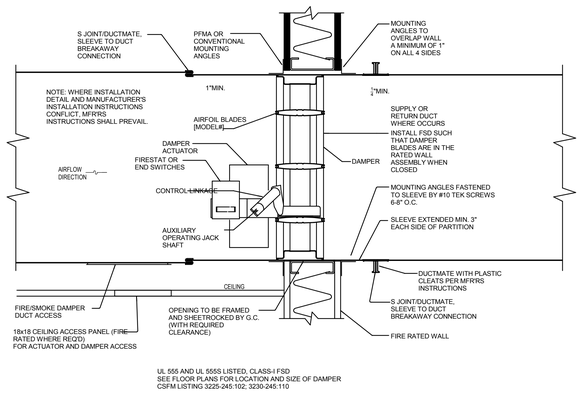

FSD DETAIL (6)

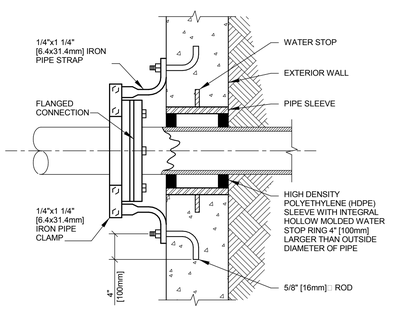

SUPPORT ANCHOR(CONDENSER OR CHILLED WATER) (3)

FINAL BID DOCUMENTS

HILLIARD ARCHITECTS INC. COPYRIGHT

Revisions:	Date

CONSULTANTS:

SYSKA HENNESSY GROUP
A member company of SH Group, Inc.

Syska Hennessy Group, Inc.
425 California Street
Suite 700
San Francisco, CA 94104
Tel: 415.288.9060
Fax: 415.835.0385
www.syska.com

REGISTERED PROFESSIONAL ENGINEER — PIRSAD V. MORE — No. M35846 — Exp.Mar.31,2014 — MECHANICAL — STATE OF CALIFORNIA

ARCHITECT/ENGINEERS:

ESTABLISHED 1988 HILLIARD ARCHITECTS GOING GREEN

HILLIARD ARCHITECTS, INC
251 Post Street, Suite 620
San Francisco, CA 94108-5017
Tel 415 989 6400, Fax 415 989 3056
www.HilliardArchitects.com

Drawing Title: **MECHANICAL DETAILS**

Approved: Project Director

Project Title: **VA PA BLDG 6 LAB RENOVATION**

Project Number: **640-13-121P**

Building Number: **6**

Location: **VAPAHCS, PALO ALTO CAMPUS 3801 MIRANDA AVE. PALO ALTO, CA 94304**

Date: **04.17.2014** | Checked: **PM** | Drawn: **JP**

Drawing Number: **M503**

Dwg. of

Office of Construction and Facilities Management

Department of Veterans Affairs

VA FORM 08-6231

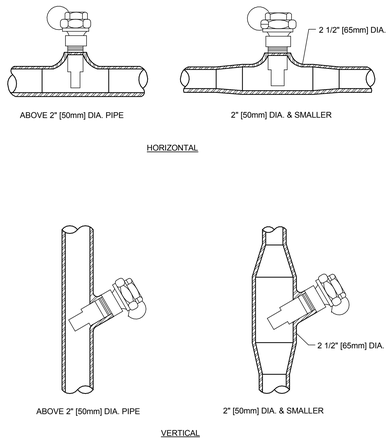

INSTALLATION OF THERMOMETER WELL (8)

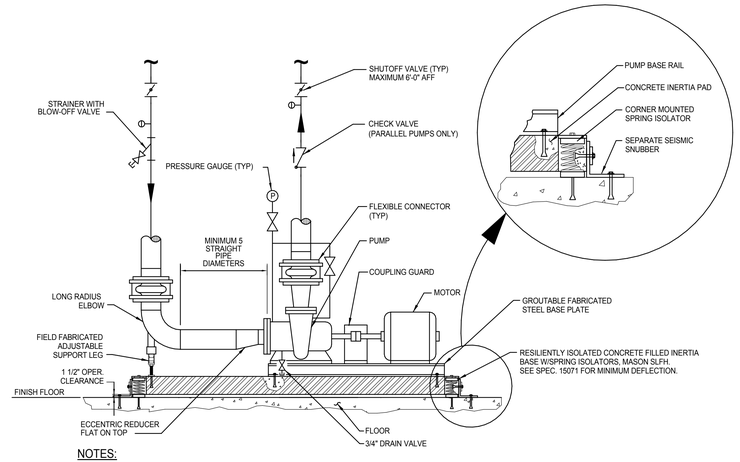

NOTES:

1. PUMP MOUNTED PER MANUFACTRUER'S RECOMMENDATION.
2. INCLUDE CHECK VALVE MOUNTED PER MANUFACTURER'S RECOMMENDATIONS AFTER ALL PUMPS INSTALLED IN PARALLEL, SEE PIPING SCHEMATIC.

INERTIA BASE MOUNTED PUMP DETAIL (4)

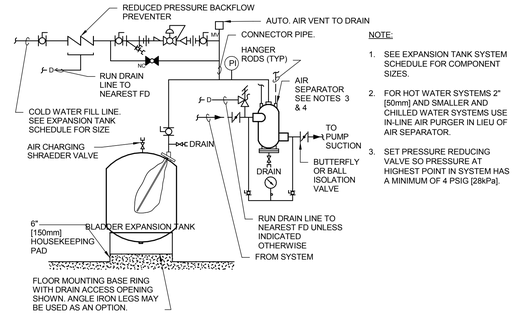

NOTE:

1. SEE EXPANSION TANK SYSTEM SCHEDULE FOR COMPONENT SIZES.
2. FOR HOT WATER SYSTEMS 2" [50mm] AND SMALLER AND CHILLED WATER SYSTEMS USE IN-LINE AIR PURGER IN LIEU OF AIR SEPARATOR.
3. SET PRESSURE REDUCING VALVE SO PRESSURE AT HIGHEST POINT IN SYSTEM HAS A MINIMUM OF 4 PSIG [28kPa].

FLOOR MOUNTED EXPANSION TANK (1)

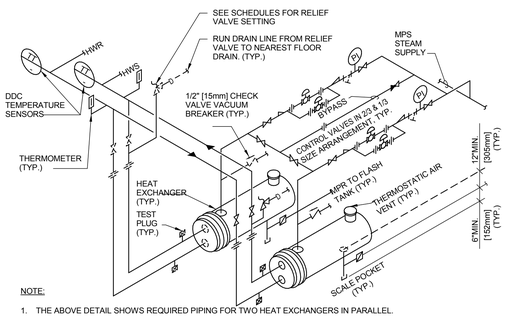

NOTE:

1. THE ABOVE DETAIL SHOWS REQUIRED PIPING FOR TWO HEAT EXCHANGERS IN PARALLEL.
2. PROVIDE SADDLE SUPPORTS AND LEGS OR HANGERS FOR HEAT EXCHANGER. MOUNTING HEIGHT SHALL BE ADJUSTED TO FACILITATE GRAVITY RETURN OF STEAM CONDENSATE.
3. MAKE THE BYPASS THE SAME SIZE AS THE CONNECTIONS TO THE CONTROL VALVES.
4. CONTROL VALVES SHALL BE IN A $\frac{1}{3}$ AND $\frac{2}{3}$ SIZE ARRANGEMENT.

HEAT EXCHANGER - STEAM TO HOT WATER (9)

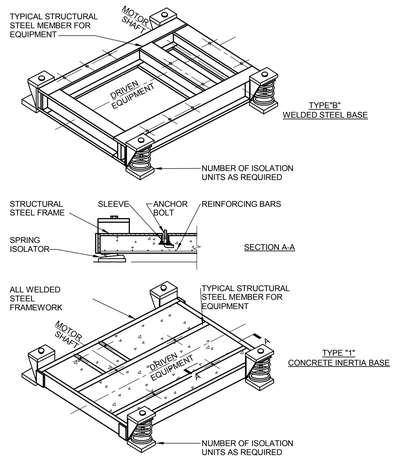

VIBRATION ISOLATION BASES (6)

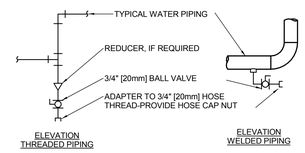

TYPICAL CHILLED AND HOT WATER PIPING DRAIN VALVE CONNECTIONS

NOTES:

1. DRAIN ALL LOW POINTS AS INDICATED ABOVE.
2. WHERE SCALE POCKETS ARE SHOWN ON PIPE RISER DIAGRAMS AND/OR PLANS LOCATE DRAIN AT BOTTOM OF SCALE POCKET.

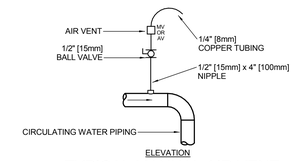

NOTES:

1. VENT ALL HIGH POINTS INDICATED ABOVE.
2. IF AUTOMATIC AIR VENTS ARE USED, PIPE DISCHARGE TO DRAIN.

TYPICAL MANUAL AIR VENT

DRAIN VALVE AND AIR VENT CONNECTIONS (HYDRONIC SYSTEMS) (5)

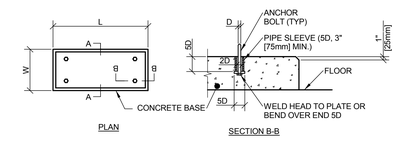

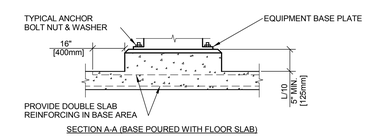

SECTION A-A (BASE POURED WITH FLOOR SLAB)

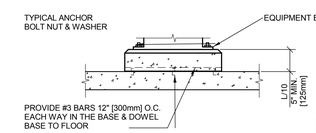

SECTION A-A (BASE NOT POURED WITH SLAB)

NOTE:
L & W DIMENSIONS SHALL BE 6" [150mm] GREATER THAN THE EQUIPMENT BASE PLATE.

CONCRETE EQUIPMENT BASES (2)

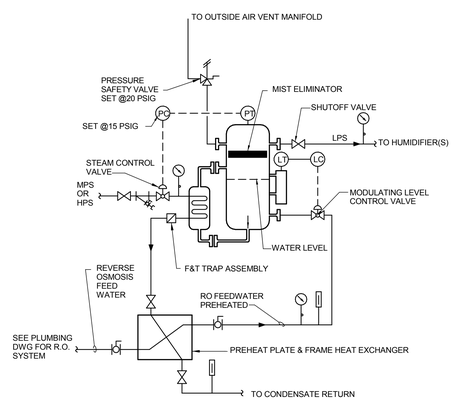

CLEAN STEAM GENERATOR (10)

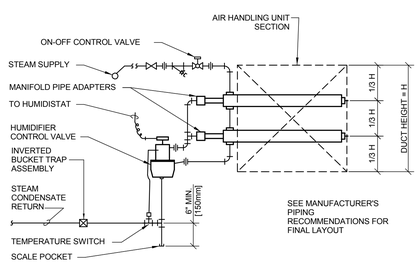

STEAM HUMIDIFIER - PIPING CONNECTIONS (MULTIPLE DISPERSION TUBES) (7)

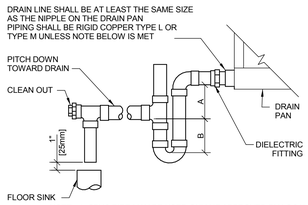

NOTE: 1. CPVC PIPE MAY BE USED ONLY IF APPROVED BY LOCAL VA AND IS INDOORS AND DOES NOT PASS THROUGH RATED BARRIERS. 2. DIELECTRIC FITTING TO BE USED WHEN TWO DISSIMILAR METALS ARE TO BE CONNECTED.

UNIT TYPE	A	B
DRAW THRU	2" [50mm] PLUS X	X
BLOW THRU	1" [25mm] MINIMUM	2X

WHERE X = STATIC PRESSURE IN PAN

AIR HANDLING UNIT DRAIN TRAP DETAIL (6)

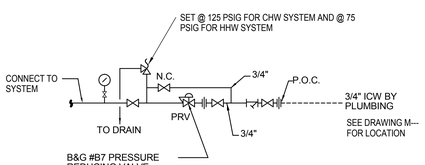

MAKE-UP WATER SET DETAIL (3)

FINAL BID DOCUMENTS

HILLIARD ARCHITECTS INC. COPYRIGHT

Revisions:	Date

CONSULTANTS:

SYSKA HENNESSY GROUP
A member company of SH Group, Inc.

Syska Hennessy Group, Inc.
425 California Street
Suite 700
San Francisco, CA 94104
Tel: 415.288.9060
Fax: 415.835.0385
www.syska.com

REGISTERED PROFESSIONAL ENGINEER — PRASAD V. MORE — No. M35846 — Exp.Mar.31,2014 — MECHANICAL — STATE OF CALIFORNIA

ARCHITECT/ENGINEERS:

ESTABLISHED 1988 HILLIARD ARCHITECTS GOING GREEN

HILLIARD ARCHITECTS, INC
251 Post Street, Suite 620
San Francisco, CA 94108-5017
Tel 415 989 6400, Fax 415 989 3056
www.HilliardArchitects.com

Drawing Title: **MECHANICAL DETAILS**

Approved: Project Director

Project Title: **VA PA BLDG 6 LAB RENOVATION**

Location: **VAPAHCS, PALO ALTO CAMPUS 3801 MIRANDA AVE. PALO ALTO, CA 94304**

Date: **04.17.2014** | Checked: **PM** | Drawn: **JP**

Project Number: **640-13-121P**

Building Number: **6**

Drawing Number: **M504**

Dwg. of

Office of Construction and Facilities Management

Department of Veterans Affairs

VA FORM 08-6231

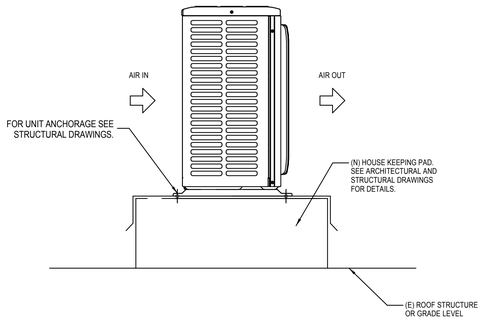

AIR COOLED CONDENSING UNIT MOUNTING DETAIL (7)

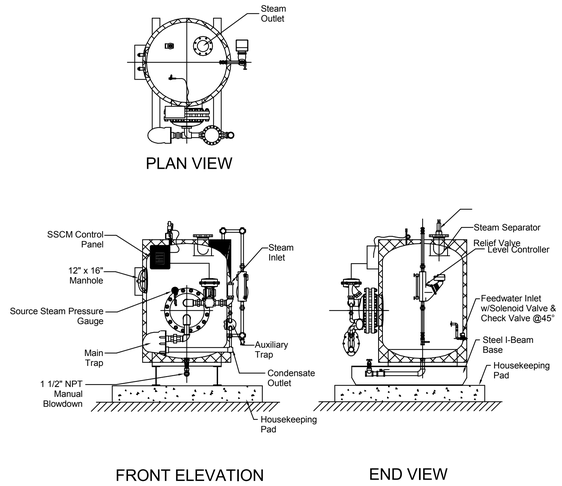

CEMLINE V320USG1024 CLEAN STEAM GENERATOR WITH SKID MOUNTED STEAM TO STEAM HEAT EXCHANGER DETAIL (6)

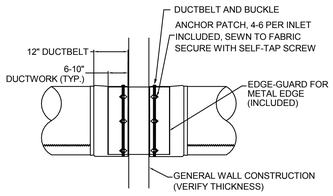

DUCTSOX PENETRATION AT WALL (4)

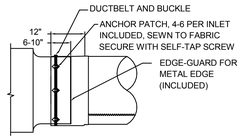

DUCTSOX INLET ATTACHMENT DETAIL (1)

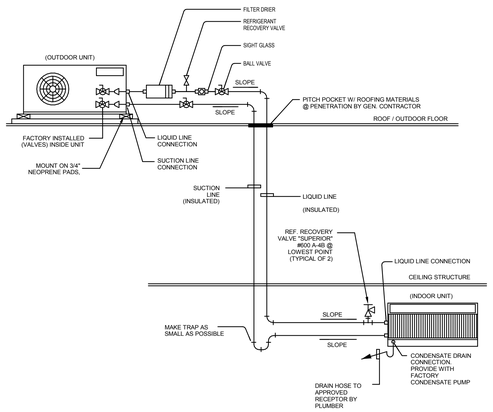

SUCTION & LIQUID LINES SHALL BE INSULATED PIPE INSULATION AS RECOMMENDED BY THE UNIT MANUFACTURER.

SPLIT SYSTEM FAN/COIL REFRIGERANT PIPING (8)

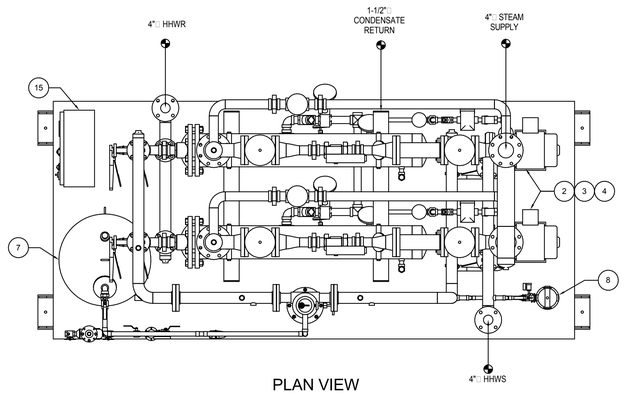

STEAM TO WATER HEAT EXCHANGER PACKAGE EQUIPMENT SCHEDULE		
ITEM	QTY.	DESCRIPTION
1	2	BELL & GOSSETTE HEAT EXCHANGER SU85-2
2	2	BELL & GOSSETTE HEATINH HOT WATER PUMPS
3	2	BELL & GOSSETTE TRIPLE DUTY VALVE
4	2	BELL & GOSSETTE SUCTION DIFFUSER
5	1	BELL & GOSSETTE ROLAITROL RL-2N AIR SEPARATOR
6	1	METRAFLEX AUTO AIR VENT MV-15A
7	1	BELL & GOSSETTE ASME EXPANSION TANK MODEL B-200-SG
8	1	GRISWOLD CHEMICAL POT FEEDER FB-2
9	1	WATTS BACK FLOW PREVENTER MODEL 009QT
10	1	BELL & GOSSETTE PRESSURE REDUCING VALVE MODEL B7-12
11	2	HOFFMAN STEAM TRAP FT015H-3
12	2	HOFFMAN STEAM TRAP FT015H-6
13	2	BELIMO STEAM CONTROL VALVE MODEL G250
14	2	KUNKLE PRESSURE & TEMPERATURE VALVE MODEL 537
15	1	CONTROL PANEL NEMA4

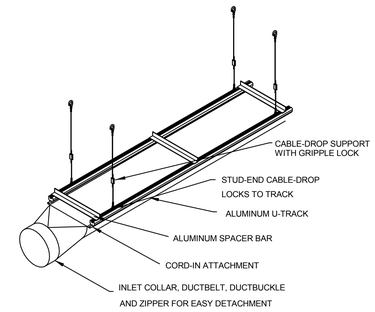

2 ROW U-TRACK SUSPENDED D-SHAPE SUSPENSION AT 3&9 O'CLOCK CORD-IN CONNECTION

NOTE:
PROVIDE SEISMIC SWAY BRACING AT ALL FOUR TOP CORNERS OF THE DUCT SOX PER SPECIFICATIONS.

DUCTSOX 2-ROW VERTICAL U TRACK SUSPENSION DETAIL (2)

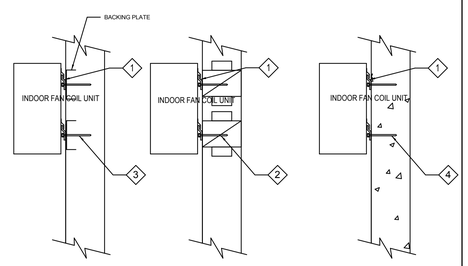

A METAL STUD WALL
B WOOD STUD WALL
C CONCRETE WALL

NOTES:

1. WALL BRACKET BY UNIT MFR.
2. COORDINATE WITH GC TO PROVIDE WOOD BLOCKING ON TOP AND BOTTOM, EACH END. REFER STRUCTURAL DRAWINGS FOR ANCHORAGE DETAILS.
3. COORDINATE WITH GC TO PROVIDE STUDS ON TOP AND BOTTOM. REFER STRUCTURAL DRAWINGS FOR ANCHORAGE DETAILS.
4. REFER STRUCTURAL DRAWINGS FOR ANCHORAGE DETAILS.

WALL MOUNTED FAN COIL DETAIL (9)

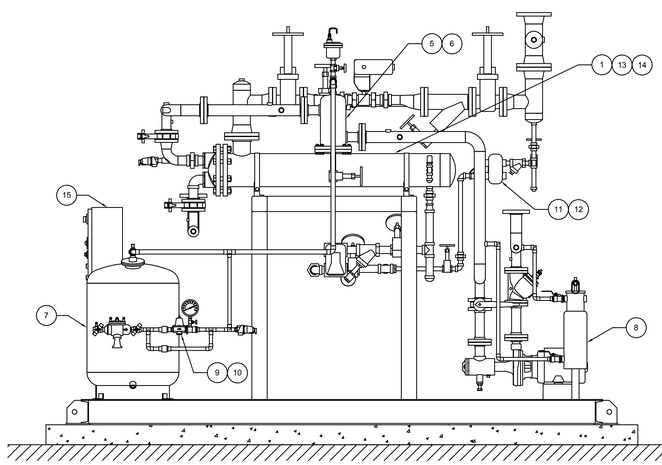

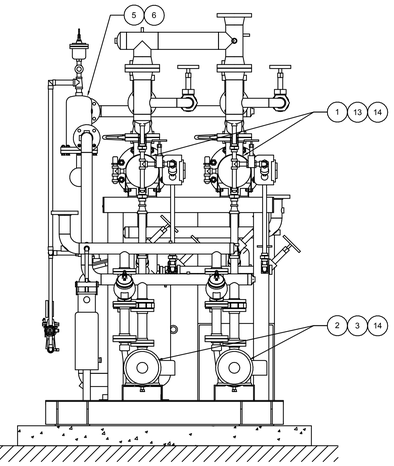

FLOW THERM STEAM TO HEATING HOT WATER HEAT EXCHANGER SKID MOUNTED PACKAGE GENERAL ARRANGEMENT DETAIL (5)

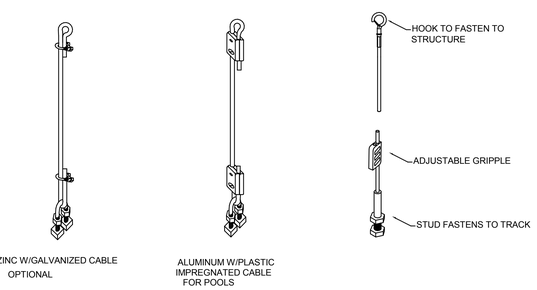

DUCTSOX TRACK SUPPORT DETAIL (3)

FINAL BID DOCUMENTS

HILLIARD ARCHITECTS INC. COPYRIGHT

Revisions:	Date

CONSULTANTS:

SYSKA HENNESSY GROUP
A member company of SH Group, Inc.

Syska Hennessy Group, Inc.
425 California Street
Suite 700
San Francisco, CA 94104
Tel: 415.288.9060
Fax: 415.835.0385
www.syska.com

REGISTERED PROFESSIONAL ENGINEER
PRASAD V. MORE
No. M35846
Exp.Mar.31,2014
MECHANICAL
STATE OF CALIFORNIA

ARCHITECT/ENGINEERS:

ESTABLISHED 1988 HILLIARD ARCHITECTS GOING GREEN

HILLIARD ARCHITECTS, INC
251 Post Street, Suite 620
San Francisco, CA 94108-5017
Tel 415 989 6400, Fax 415 989 3056
www.HilliardArchitects.com

Drawing Title: **MECHANICAL DETAILS**	Project Title: **VA PA BLDG 6 LAB RENOVATION**		Project Number: **640-13-121P**
			Building Number: **6**
Approved: Project Director	Location: **VAPAHCS, PALO ALTO CAMPUS 3801 MIRANDA AVE. PALO ALTO, CA 94304**		Drawing Number: **M505**
	Date: **04.17.2014**	Checked: **PVM** / Drawn: **JP**	Dwg. of

Office of Construction and Facilities Management

Department of Veterans Affairs

VA FORM 08-6231

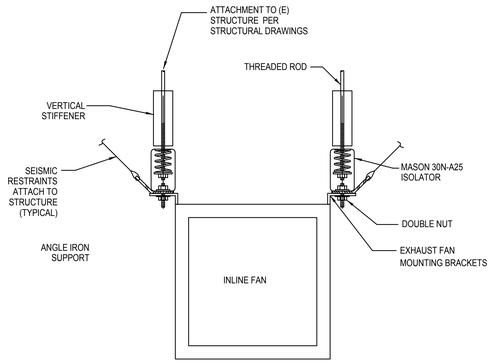

CEILING SUSPENDED INLINE DUCT FAN DETAIL (10)

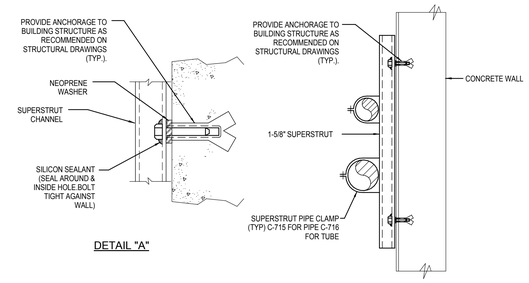

PIPE SUPPORT ON WALL DETAIL (7)

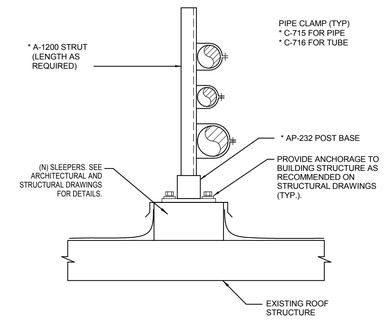

NOTE:
* REFERS TO SUPERSTRUT PART NO.

PIPE SUPPORT ON STRUCTURAL STEEL PLATFORM DETAIL (4)

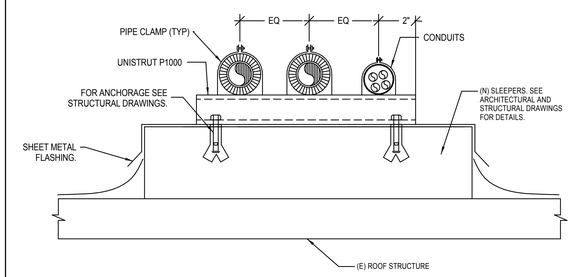

NOTES:

1. REFER TO FLOOR PLANS FOR PIPE & CONDUIT QUANTITIES.
2. PROVIDE SUPPORTS EVERY 5 FEET.

PIPE SUPPORTS ON ROOF DETAIL (1)

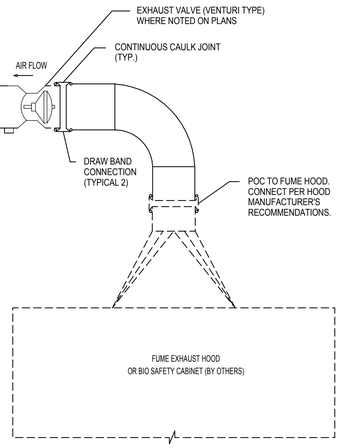

FUME HOOD/B.S.C. EXHAUST CONNECTION DETAIL (11)

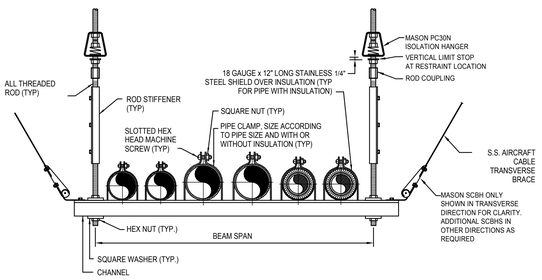

NOTE:

1. DETAIL SHOWN ARE SIMILAR FOR NON-BRACED TRAPEZE PIPE HANGER SUPPORT WITH BRACING OMITTED.
2. PIPE HANGER DETAIL IS FOR REFERENCE PURPOSES ONLY. ALL PIPE HANGERS SHALL BE STRUCTURALLY AND SEISMICALLY DESIGNED BY CONTRACTOR.
3. USE S.S. AIRCRAFT CABLE AT ALL EXPOSED TO VIEW LOCATIONS.

MULTIPLE PIPE SUPPORT DETAIL (8)

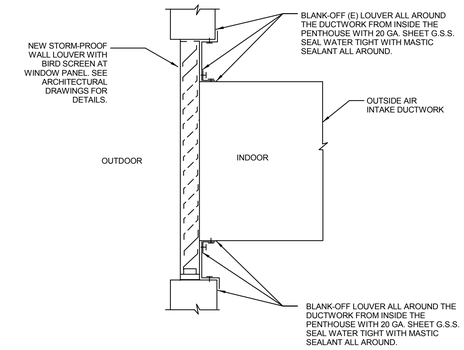

OA INTAKE DUCT CONNECTION TO WALL LOUVER DETAIL (5)

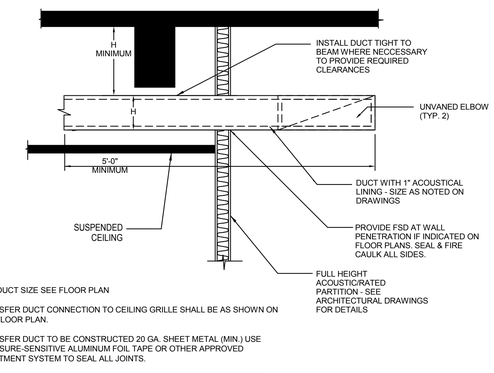

NOTES:

1. FOR DUCT SIZE SEE FLOOR PLAN
2. TRANSFER DUCT CONNECTION TO CEILING GRILLE SHALL BE AS SHOWN ON THE FLOOR PLAN.
3. TRANSFER DUCT TO BE CONSTRUCTED 20 GA. SHEET METAL (MIN.) USE PRESSURE-SENSITIVE ALUMINUM FOIL TAPE OR OTHER APPROVED TREATMENT SYSTEM TO SEAL ALL JOINTS.
4. PENETRATIONS OF ACOUSTICAL PARTITIONS BY DUCTWORK SHALL BE ACOUSTICALLY SEALED AS SHOWN.
5. ANY GAP LARGER THAN 1/2" SHALL COVERED WITH GYPSUM BOARD, LAPPED A MINIMUM OF 2" AND SCREWED BEFORE USING ACOUSTICAL SEALANT.

TRANSFER AIR DUCT DETAIL (2)

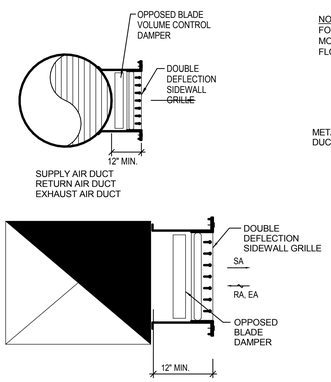

SURFACE MOUNT GRILLE ON DUCT

NOTE:
FOR SIDEWALL GRILLE FOR MODEL AND ORIENTATION SEE FLOOR PLANS.

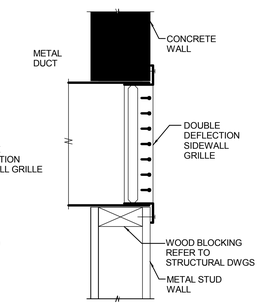

SURFACE MOUNT GRILLE ON WALL

SIDE WALL/DUCT MOUNTED GRILLE DETAIL (12)

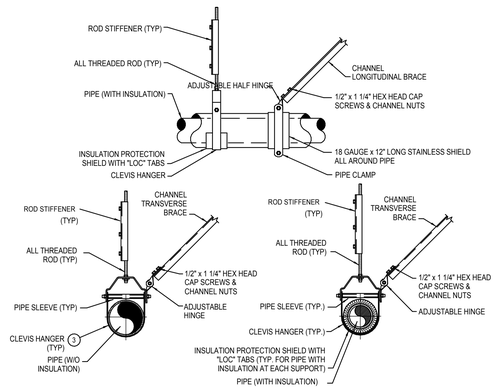

NOTE:

1. DETAIL SHOWN ARE SIMILAR FOR NON-BRACED TRAPEZE PIPE HANGER SUPPORT WITH BRACING OMITTED.
2. PIPE HANGER DETAIL IS FOR REFERENCE PURPOSES ONLY. ALL PIPE HANGERS SHALL BE STRUCTURALLY AND SEISMICALLY DESIGNED BY CONTRACTOR.

PIPE SUPPORT DETAIL (9)

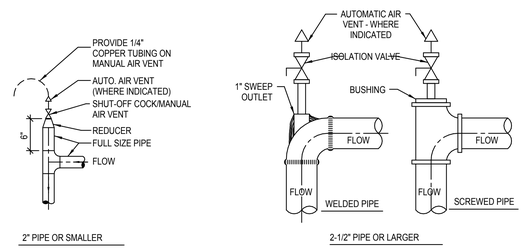

NOTES:

1. PROVIDE MANUAL AIR VENTS AT ALL PIPING HIGH POINTS & AT POINTS IN THE SYSTEM WHERE AIR CAN GET TRAPPED.
2. LOCATE AIR VENTS IN ELBOWS AS INDICATED ABOVE. WATER FLOW SHOULD ALWAYS BE HORRIZONTAL TOWARD THE ELBOW & THEN VERTICALLY DOWN.
3. PROVIDE A 1/4" MINIMUM TUBE ON THE DISCHARGE OF BOTH MANUAL & AUTOMATIC VENTS. TERMINATE TUBING WHERE ACCESSABLE FOR VENTING INTO A CAN OR AT NEAREST AIR GAP WASTE.
4. ALL AIR VENTS SHALL BE ACCESSABLE. PROVIDE ACCESS DOOR AS NECESSARY.
5. PROVIDE AUTOMATIC AIR VENTS WHERE INDICATED AND/OR SPECIFIED. PROVIDE AT LEAST TWO AIR VENTS IN EACH PIPING SYSTEM.

AUTO AIR VENT MOUNTING DETAIL (6)

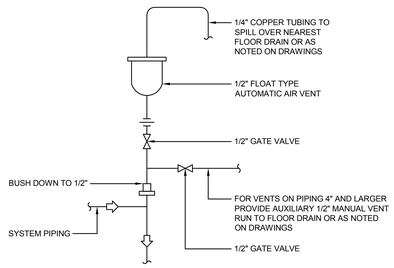

AUTOMATIC AIR VENT ASSEMBLY (3)

FINAL BID DOCUMENTS

HILLIARD ARCHITECTS INC. COPYRIGHT

Revisions: | Date

CONSULTANTS:

SYSKA HENNESSY GROUP
A member company of SH Group, Inc.
Syska Hennessy Group, Inc.
425 California Street
Suite 700
San Francisco, CA 94104
Tel: 415.288.9060
Fax: 415.835.0385
www.syska.com

REGISTERED PROFESSIONAL ENGINEER PRASAD V. MORE No. M35846 Exp.Mar.31,2014 MECHANICAL STATE OF CALIFORNIA

ARCHITECT/ENGINEERS:

HILLIARD ARCHITECTS, INC
251 Post Street, Suite 620
San Francisco, CA 94108-5017
Tel 415 989 6400, Fax 415 989 3056
www.HilliardArchitects.com

Drawing Title	MECHANICAL DETAILS
Approved: Project Director	
Project Title	VA PA BLDG 6 LAB RENOVATION
Project Number	640-13-121P
Building Number	6
Location	VAPAHCS, PALO ALTO CAMPUS 3801 MIRANDA AVE. PALO ALTO, CA 94304
Date	04.17.2014
Checked	PVM
Drawn	JP
Drawing Number	M506
Dwg. of	

Office of Construction and Facilities Management
Department of Veterans Affairs

VA FORM 08-6231

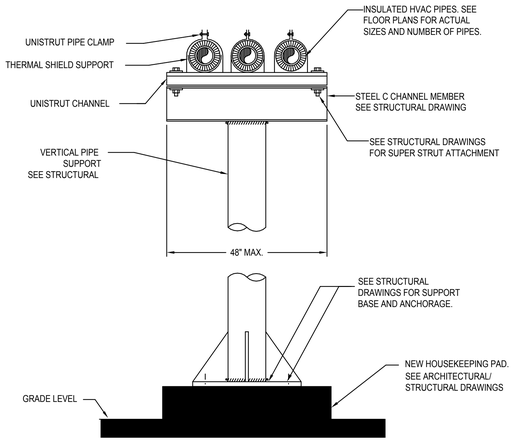

SERVICE YARD PIPE MOUNTING DETAIL (7)

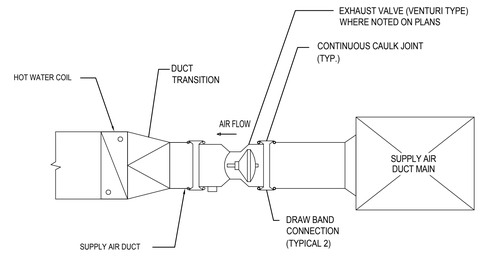

SUPPLY AIR VAV FLOW CONTROL VALVE (VENTURI TYPE) DETAIL (4)

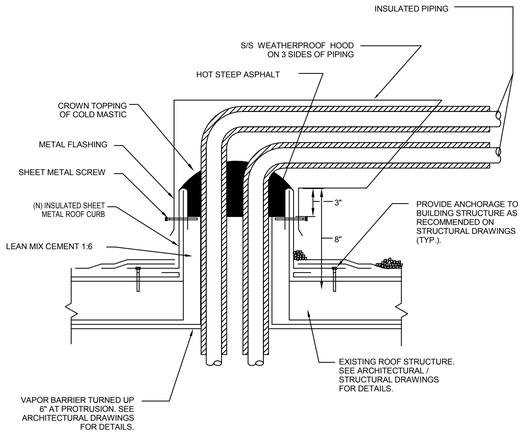

PIPING THRU ROOF DETAIL (1)

(10)

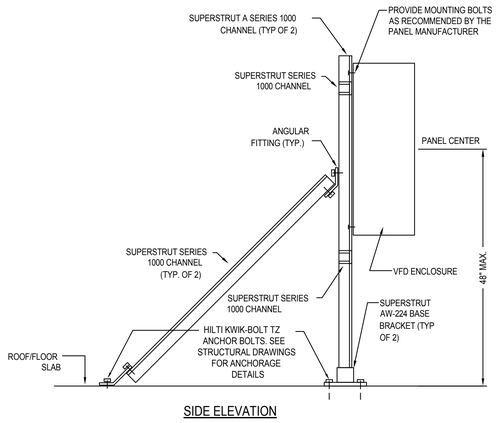

VFD ENCLOSURE MOUNTED ON ROOF / FLOOR SLAB DETAIL (8)

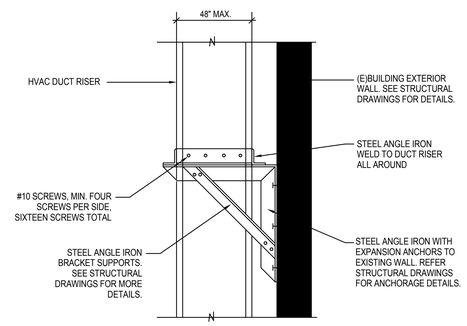

DUCT RISER SUPPORT ON BUILDING EXTERIOR WALL (5)

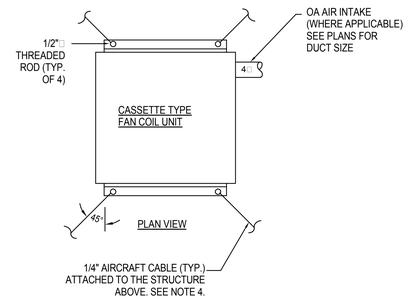

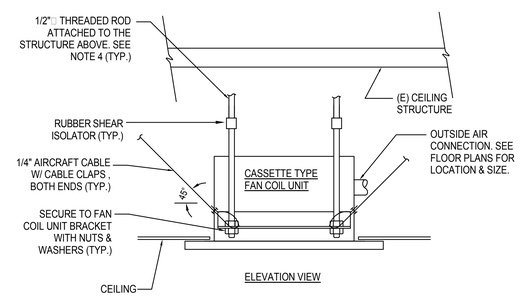

NOTES:

1. AS REQUIRED TO MEET CODE REQUIREMENTS PROVIDE "MASON" SEISMIC SWAY BRACE SYSTEM TO THE FAN COIL UNIT SUPPORTS AS RECOMMENDED BY MASON INDUSTRIES.
2. PROVIDE FAN COIL UNIT WITH FACTORY PROVIDED CONDENSATE DRAIN PUMP KIT WITH PUMP INCLUDING ALL NECESSARY ACCESSORIES. LOCATE AND MOUNT CONDENSATE PUMP AS RECOMMENDED BY THE UNIT MANUFACTURER. SEE PLUMBING DRAWINGS FOR CONDENSATE DRAIN PIPE ROUTING.
3. PROVIDE CONDENSATE DRAIN PIPING AS INDICATED ON THE PLUMBING DRAWINGS.
4. SEE STRUCTURAL DRAWINGS FOR THE REQUIREMENTS OF THE ANCHORAGE AND ATTACHMENTS TO THE BUILDING STRUCTURE.
5. PROVIDE FAN COIL UNITS PER MECHANICAL SCHEDULE ON DRAWING M-002. COORDINATE ACTUAL LOCATIONS AND ELEVATIONS OF THE FAN COIL UNITS AT THE FIELD TO AVOID CONFLICTS WITH THE (E) BUILDING STRUCTURE AND OTHER BUILDING SERVICES. PROVIDE SERVICES AND MAINTENANCE ACCESS AROUND THE FAN COIL UNITS AS RECOMMENDED BY THE UNIT MANUFACTURER. COORDINATE WITH GENERAL CONTRACTOR TO PROVIDE CEILING ACCESS PANELS IN THE INACCESSIBLE CEILINGS. SIZE AND LOCATION OF THE CEILING ACCESS PANEL SHALL BE AS RECOMMENDED BY THE UNIT MANUFACTURER.

CEILING MOUNTED CASSETTE TYPE FAN COIL UNIT DETAIL (2)

(11)

(12)

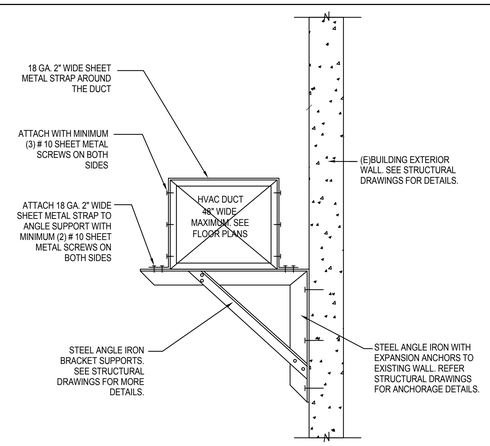

SUPPORT HORIZONTAL DUCT ON EXTERIOR WALL (6)

(9)

FINAL BID DOCUMENTS

HILLIARD ARCHITECTS INC. COPYRIGHT

Revisions:	Date

CONSULTANTS:

SYSKA HENNESSY GROUP
A member company of SH Group, Inc.
Syska Hennessy Group, Inc.
425 California Street
Suite 700
San Francisco, CA 94104
Tel: 415.288.9060
Fax: 415.835.0385
www.syska.com

REGISTERED PROFESSIONAL ENGINEER PRASAD V. MORE No. M35846 Exp.Mar.31,2014 MECHANICAL STATE OF CALIFORNIA

ARCHITECT/ENGINEERS:

ESTABLISHED 1988 HILLIARD ARCHITECTS GOING GREEN
HILLIARD ARCHITECTS, INC
251 Post Street, Suite 620
San Francisco, CA 94108-5017
Tel 415 989 6400, Fax 415 989 3056
www.HilliardArchitects.com

Drawing Title: MECHANICAL DETAILS	Project Title: VA PA BLDG 6 LAB RENOVATION		Project Number: 640-13-121P
			Building Number: 6
Approved: Project Director	Location: VAPAHCS, PALO ALTO CAMPUS, 3801 MIRANDA AVE. PALO ALTO, CA 94304		Drawing Number: M507
	Date: 04.17.2014	Checked: PVM	Drawn: JP
			Dwg. of

Office of Construction and Facilities Management

Department of Veterans Affairs

VA FORM 08-6231

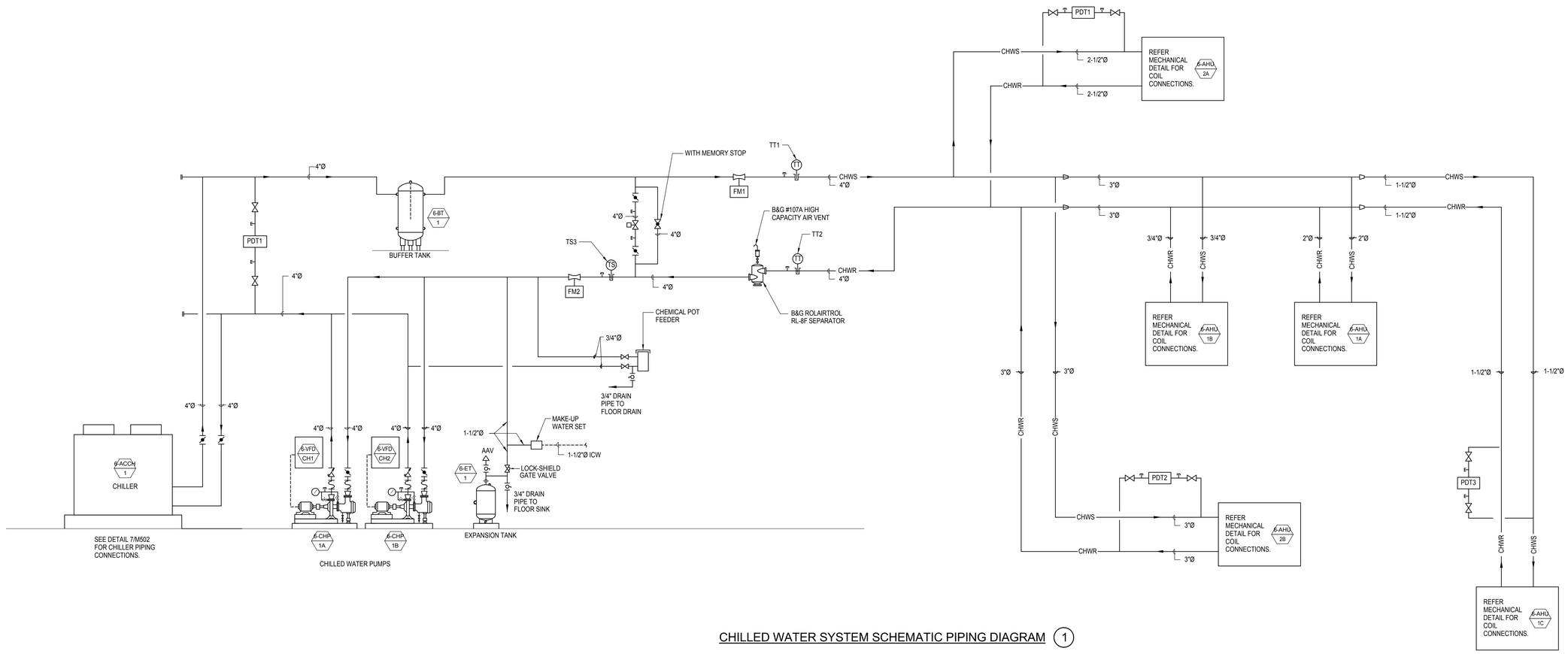

CHILLED WATER SYSTEM SCHEMATIC PIPING DIAGRAM (1)

HILLIARD ARCHITECTS INC. COPYRIGHT

FINAL BID DOCUMENTS

Revisions:	Date

CONSULTANTS:

SYSKA HENNESSY GROUP
A member company of SH Group, Inc.

Syska Hennessy Group, Inc.
425 California Street
Suite 700
San Francisco, CA 94104
Tel: 415.288.9060
Fax: 415.835.0385
www.syska.com

REGISTERED PROFESSIONAL ENGINEER
PRASAD V. MORE
No. M35846
Exp.Mar.31.2014
MECHANICAL
STATE OF CALIFORNIA

ARCHITECT/ENGINEERS:

ESTABLISHED 1988 HILLIARD ARCHITECTS GOING GREEN

HILLIARD ARCHITECTS, INC
251 Post Street, Suite 620
San Francisco, CA 94108-5017
Tel 415 989 6400, Fax 415 989 3056
www.HilliardArchitects.com

Drawing Title
MECHANICAL SCHEMATIC DIAGRAMS

Approved: Project Director

Project Title
VA PA BLDG 6 LAB RENOVATION

Location
VAPAHCS, PALO ALTO CAMPUS
3801 MIRANDA AVE. PALO ALTO, CA 94304

Date **04.17.2014** | Checked **PM** | Drawn **JP**

Project Number **640-13-121P**

Building Number **6**

Drawing Number **M601**

Dwg. of

Office of Construction and Facilities Management

Department of Veterans Affairs

VA FORM 08-6231

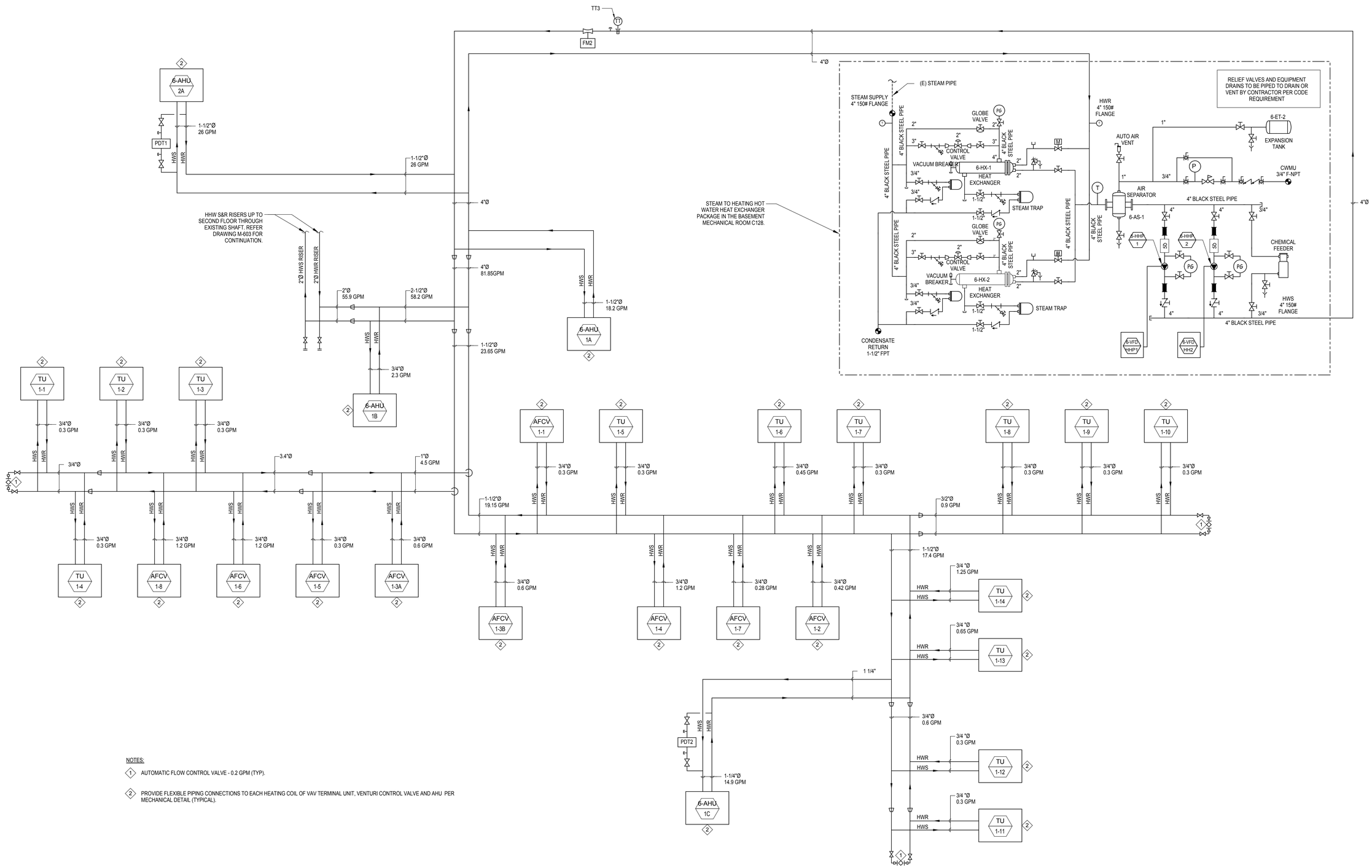

NOTES:

1. AUTOMATIC FLOW CONTROL VALVE - 0.2 GPM (TYP).
2. PROVIDE FLEXIBLE PIPING CONNECTIONS TO EACH HEATING COIL OF VAV TERMINAL UNIT, VENTURI CONTROL VALVE AND AHU PER MECHANICAL DETAIL (TYPICAL).

1 SCHEMATIC PIPING DIAGRAM FOR HEATING HOT WATER SYSTEM-FIRST FLOOR BUILDING 6
NOT TO SCALE

HILLIARD ARCHITECTS INC. COPYRIGHT

FINAL BID DOCUMENTS

Revisions:	Date

CONSULTANTS:

SYSKA HENNESSY GROUP
A member company of SH Group, Inc.

Syska Hennessy Group, Inc.
425 California Street
Suite 700
San Francisco, CA 94104
Tel: 415.288.9060
Fax: 415.835.0385
www.syska.com

REGISTERED PROFESSIONAL ENGINEER PRASAD V. MORE No. M35846 Exp.Mar.31,2014 MECHANICAL STATE OF CALIFORNIA

ARCHITECT/ENGINEERS:

ESTABLISHED 1988 HILLIARD ARCHITECTS GOING GREEN

HILLIARD ARCHITECTS, INC
251 Post Street, Suite 620
San Francisco, CA 94108-5017
Tel 415 989 6400, Fax 415 989 3056
www.HilliardArchitects.com

Drawing Title: **MECHANICAL SCHEMATIC DIAGRAMS**

Approved: Project Director

Project Title: **VA PA BLDG 6 LAB RENOVATION**

Location: **VAPAHCS, PALO ALTO CAMPUS 3801 MIRANDA AVE. PALO ALTO, CA 94304**

Date: **04.17.2014** | Checked: **PM** | Drawn: **JP**

Project Number: **640-13-121P**

Building Number: **6**

Drawing Number: **M602**

Dwg. of

Office of Construction and Facilities Management

Department of Veterans Affairs

VA FORM 08-6231

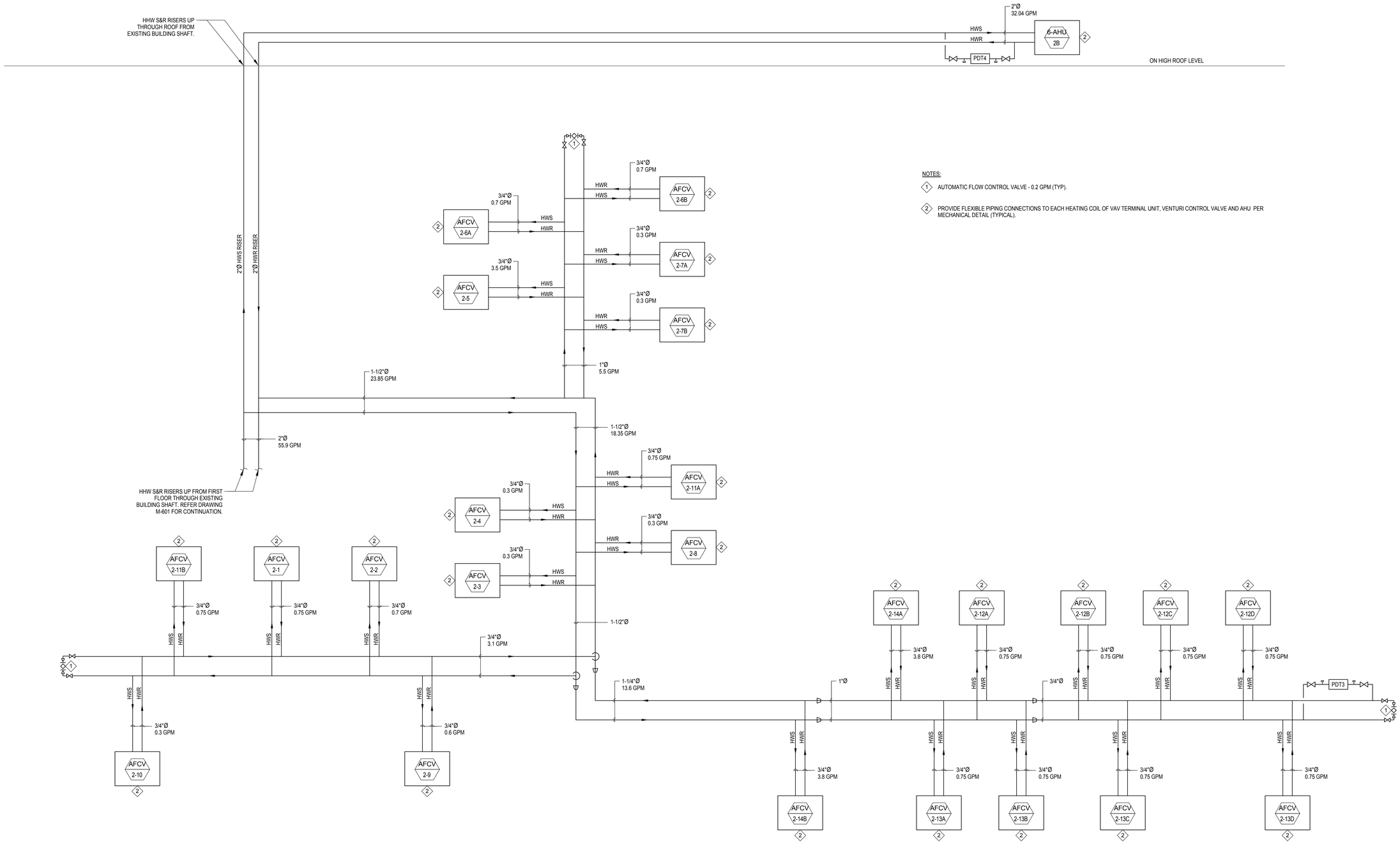

NOTES:

1. AUTOMATIC FLOW CONTROL VALVE - 0.2 GPM (TYP).
2. PROVIDE FLEXIBLE PIPING CONNECTIONS TO EACH HEATING COIL OF VAV TERMINAL UNIT, VENTURI CONTROL VALVE AND AHU PER MECHANICAL DETAIL (TYPICAL).

1 SCHEMATIC PIPING DIAGRAM FOR HEATING HOT WATER SYSTEM-SECOND FLOOR & ROOF OF BUILDING 6
NOT TO SCALE

HILLIARD ARCHITECTS INC. COPYRIGHT

FINAL BID DOCUMENTS

Revisions:	Date

CONSULTANTS:

SYSKA HENNESSY GROUP
A member company of SH Group, Inc.

Syska Hennessy Group, Inc.
425 California Street
Suite 700
San Francisco, CA 94104
Tel: 415.288.9060
Fax: 415.835.0385
www.syska.com

REGISTERED PROFESSIONAL ENGINEER — PRASAD V. MONE — No. M35846 — Exp.Mar.31.2014 — MECHANICAL — STATE OF CALIFORNIA

ARCHITECT/ENGINEERS:

ESTABLISHED 1988 HILLIARD ARCHITECTS GOING GREEN

HILLIARD ARCHITECTS, INC
251 Post Street, Suite 620
San Francisco, CA 94108-5017
Tel 415 989 6400, Fax 415 989 3056
www.HilliardArchitects.com

Drawing Title: **MECHANICAL SCHEMATIC DIAGRAMS**

Approved: Project Director

Project Title: **VA PA BLDG 6 LAB RENOVATION**

Location: **VAPAHCS, PALO ALTO CAMPUS 3801 MIRANDA AVE. PALO ALTO, CA 94304**

Date: **04.17.2014** | Checked: **PM** | Drawn: **JP**

Project Number: **640-13-121P**

Building Number: **6**

Drawing Number: **M603**

Dwg. of

Office of Construction and Facilities Management

Department of Veterans Affairs

VA FORM 08-6231

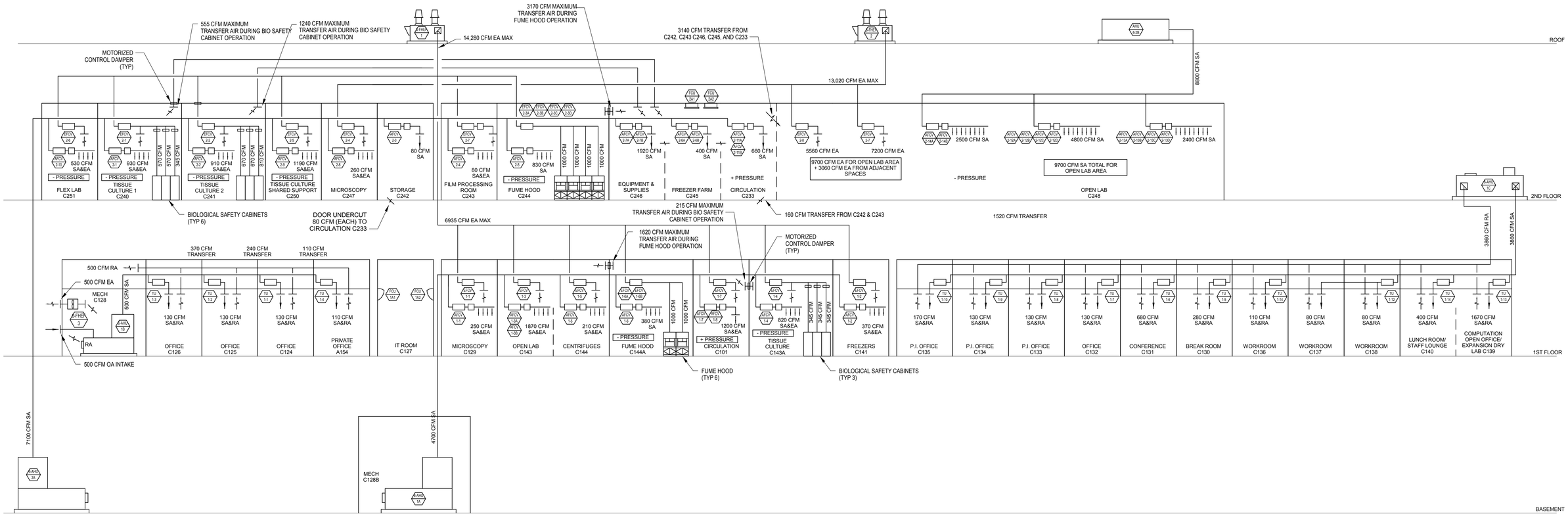

1 SCHEMATIC AIRFLOW DIAGRAM
NOT TO SCALE

NOTES:

1. FOR DUCT WORK SIZES REFER TO FLOOR PLANS.
2. READ THIS SCHEMATIC DRAWING IN CONJUNCTION WITH FLOOR PLANS (DRAWINGS M101, M102, AND M103) AND ROOM AIR BALANCE SCHEDULE (ON DRAWING M005).

HILLIARD ARCHITECTS INC. COPYRIGHT

FINAL BID DOCUMENTS

Revisions: Date

CONSULTANTS:

SYSKA HENNESSY GROUP
A member company of SH Group, Inc.

Syska Hennessy Group, Inc.
425 California Street
Suite 700
San Francisco, CA 94104
Tel: 415.288.9060
Fax: 415.835.0385
www.syska.com

REGISTERED PROFESSIONAL ENGINEER
PRASAD V. MORE
No. M35846
Exp.Mar.31,2014
MECHANICAL
STATE OF CALIFORNIA

ARCHITECT/ENGINEERS:

ESTABLISHED 1988 HILLIARD ARCHITECTS GOING GREEN

HILLIARD ARCHITECTS, INC
251 Post Street, Suite 620
San Francisco, CA 94108-5017
Tel 415 989 6400, Fax 415 989 3056
www.HilliardArchitects.com

Drawing Title: **MECHANICAL SCHEMATIC DIAGRAMS**

Approved: Project Director

Project Title: **VA PA BLDG 6 LAB RENOVATION**

Location: VAPAHCS, PALO ALTO CAMPUS, 3801 MIRANDA AVE. PALO ALTO, CA 94304

Date: 04.17.2014 | Checked: PM | Drawn: JP

Project Number: 640-13-121P

Building Number: 6

Drawing Number: M604

Dwg. of

Office of Construction and Facilities Management

Department of Veterans Affairs

VA FORM 08-6231

JOB: 640-13-121P
BUILDING: VAPA B6

SYSTEM: VAV AIR HANDLER

SYSTEM COMPONENT:	POINT ID	ABBREVIATION	POINT LEGEND: PROPRIETARY/ALL DEVICES NO.	POINT LEGEND: ELECTRIC DEVICE SUPPLIED BY	POINT LEGEND: ELECTRIC DEVICE INSTALLED BY	POINT LEGEND: SENSOR	SYSTEM OUTPUTS: BINARY: SPEED COMMAND	SYSTEM OUTPUTS: BINARY: DAMPER POSITION	SYSTEM OUTPUTS: BINARY: VALVE POSITION	SYSTEM OUTPUTS: BINARY: FAN	SYSTEM OUTPUTS: ANALOG: PRIMARY AIRFLOW	SYSTEM INPUTS: BINARY: PRIMARY AIRFLOW	SYSTEM INPUTS: BINARY: LOW SUPPLY PRESSURE	SYSTEM INPUTS: ANALOG: TEMPERATURE (D)	SYSTEM INPUTS: ANALOG: PRESSURE	SYSTEM INPUTS: ANALOG: CLOCK	SYSTEM INPUTS: ANALOG: KEYPAD	SYSTEM INPUTS: ANALOG: STATIC PRESSURE	SYSTEM INPUTS: ANALOG: CARBON MONOXIDE	SYSTEM INPUTS: ANALOG: HUMIDITY	SYSTEM INPUTS: ANALOG: LINEAR ANGLE TIME	SYSTEM INPUTS: ANALOG: LINEAR ANGLE DIRECT	SYSTEM INPUTS: ANALOG: ANGLE DIRECT TIME	SYSTEM INPUTS: ANALOG: LOW LIMIT	SYSTEM SOFTWARE/CONTROL: ALARM PROCESSING: SCHEDULE INTERRUPTION	SYSTEM SOFTWARE/CONTROL: APPLICATION/FUNCTION: SOLID STATE CYCLE	SYSTEM SOFTWARE/CONTROL: APPLICATION/FUNCTION: FULL FUNCTIONAL ECONOMIZER	SYSTEM SOFTWARE/CONTROL: APPLICATION/FUNCTION: TEMPERATURE RESET	SYSTEM SOFTWARE/CONTROL: APPLICATION/FUNCTION: HUMIDITY RESET	SYSTEM SOFTWARE/CONTROL: APPLICATION/FUNCTION: SUPPLY AIR RESET	SYSTEM SOFTWARE/CONTROL: APPLICATION/FUNCTION: STATIC PRESSURE RESET	SYSTEM SOFTWARE/CONTROL: APPLICATION/FUNCTION: PRESSURE/VOLUME CONTROL	SYSTEM SOFTWARE/CONTROL: APPLICATION/FUNCTION: SAFE SHUTDOWN CONTROL	SYSTEM SOFTWARE/CONTROL: APPLICATION/FUNCTION: FUTURE INTEGRATION	SYSTEM SOFTWARE/CONTROL: APPLICATION/FUNCTION: TRENDING	REMARKS
Return air Temperature	AI-1	RAT						o						o																							
Return Air Humidity	AI-2	RAH						o										o																		o	
Return Air Flow (cfm)	AI-3	RAF						o							o					o															o	
Mixed Air Temperature	AI-4	MAT						o						o																						o	
Pre-Heat Temperature	AI-5	PHT						o						o																						o	
Cooling Coil Temperature	AI-6	CCT						o						o						o																o	
Discharge Air Temperature	AI-7	DAT						o						o														o								o	
Discharge Static Pressure	AI-8	DASP						o									o			o									o							o	
Discharge Air Humidity	AI-9	DAH						o										o																		o	
Supply Air Flow (cfm)	AI-10	SAF						o							o					o															o	
OUTSIDE AIR TEMPERATURE	AI-11	OAT												o																						o	
RETURN LOW PRESSURE	BI-1	RLP								o																										o	
RETURN FAN STATUS	BI-2	RF-STS						o																												o	
SUPPLY FAN STATUS	BI-3	SF-STS						o																												o	
MIXED AIR LOW LIMIT	BI-4	TSL-1									o										o															o	
STATIC PRESSURE HIGH LIMIT	BI-5	SPS-2										o									o															o	
HUMIDITY HIGH LIMIT	BI-6	HHL											o								o															o	
SUPPLY FAN VSMC ALARM	BI-7	SF-ALA						o																												o	
RETURN FAN VSMC ALARM	BI-8	RF-ALA						o																												o	
RETURN FAN VSMC	AO-1	RF-SPD				o																												o	o	o	FULL COMMUNICATION
SUPPLY FAN VSMC	AO-2	SF-SPD				o																												o	o	o	FULL COMMUNICATION
OUTSIDE AIR DAMPER	AO-3	OAD					o																o													o	
RETURN AIR DAMPER	AO-4	RAD					o																o													o	
EXHAUST AIR DAMPER	AO-5	EAD					o																o													o	
MINIMUM OUTSIDE AIR DAMPER	AO-7	MIN-OAD					o																													o	
PRE-HEAT VALVE V-2	AO-8	PHT-V1						o																												o	
COILING VALVE V-1	AO-9	CLG-V1						o																												o	
STEAM HUMIDIFIER VALVE V-4	AO-10	HUM-V4						o																												o	
RETURN FAN START/STOP	BO-1	RF-SST		o																		o														o	
SUPPLY FAN START/STOP	BO-2	SF-SST		o																		o														o	
STEAM ISOLATION VALVE V-3	BO-3	HUM-ISO-V3			o											o																				o	

PAGE:

GENERAL NOTES:

1. WIRING TO FIRE ALARM SYSTEM BY ELECTRICAL.
2. HARD WIRE DUCT SMOKE DETECTOR TO CAUSE INSTANTANEOUS AUTOMATIC SHUT DOWN OF THE FAN THROUGH THE VFD OF THE UNIT.
3. BACNET MS/TP INTERFACE TO CONTROLLER SEE VFD WIRING SCHEMATIC DIAGRAM.
4. VFD CONTROL PANEL SHALL BE FACTORY INSTALLED AND WIRED BY THE AIR HANDLING UNIT MANUFACTURER FOR SINGLE POINT POWER CONNECTION. MECHANICAL AND CONTROLS CONTRACTOR SHALL COORDINATE THE LOCATION OF THE VFD CONTROL PANEL ON THE AIR HANDLING UNIT.
5. BELIMO PRESSURE INDEPENDENT CONTROL VALVES FOR CHW & HHW COILS SHALL BE FURNISHED BY CONTROLS CONTRACTOR & INSTALLED BY MECHANICAL CONTRACTOR.
6. FACTORY SUPPLIED AND MOUNTED LOW LEAKAGE CONTROL DAMPER WITH BELIMO 2-10 VDC DAMPER ACTUATOR. INTERLOCK THE DAMPER OPERATION WITH VFD SAFETY CIRCUIT SUCH THAT FAN SHALL START ONLY WHEN THE DAMPER IS OPEN.
7. ALL OUTDOOR EXPOSED CONTROL PANEL AND ENCLOSURES OF THE CONTROLS/DEVICES SHALL BE PROVIDED IN A WEATHER PROOF NEMA3R ENCLOSURES.

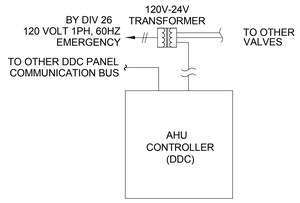

NOTES FOR AHU UNITS

1. THE DDC PANELS SHALL CONTAIN ALL CONTROL DEVICES, RELAYS, SWITCHES AND CONTROLLERS ETC. THAT ARE PART OF THE CONTROL SYSTEM.
2. THE DDC PANEL MAY CONSIST OF MORE THAN ONE PANEL BUT IN SUCH INSTANCES ALL PANELS SHALL BE MOUNTED ON A COMMON BACK BOARD IN ONE LOCATION.
3. ALL LOW VOLTAGES LINES AND ELECTRICAL POWER WIRING SHALL TERMINATE AT ONE POINT FOR EACH PANEL OR GROUP OF PANELS.
4. PROVIDE AND INSTALL ALL 120 VOLT POWER WIRING AS INDICATED.
5. FURNISH A SEPARATE PRESSURE SWITCH IN THE SUPPLY FAN CABINET AND RETURN FAN CABINET OF EACH AIR HANDLING UNIT. EACH PRESSURE SWITCH SHALL BE ELECTRICALLY WIRED TO SHUT DOWN ITS RESPECTIVE FAN AND SHALL BE FURNISHED WITH A MANUAL RESET BUTTON. "DWYER" OR EQUAL.
6. OUTSIDE AIR TEMPERATURE AND HUMIDITY SHALL BE PROVIDED TO THE DDC PANELS
7. OUTSIDE AIR CO2CONCENTRATION SHALL BE PROVIDED TO DDC PANEL OF EACH AIR HANDLER
8. FOUR (SUPPLY) / SIX (RETURN) FANS AND VFD'S ARE SHOWN IN THIS DETAIL. HOWEVER, REFER TO MECHANICAL SCHEDULES FOR ACTUAL NUMBER OF FANS AND VFD'S.

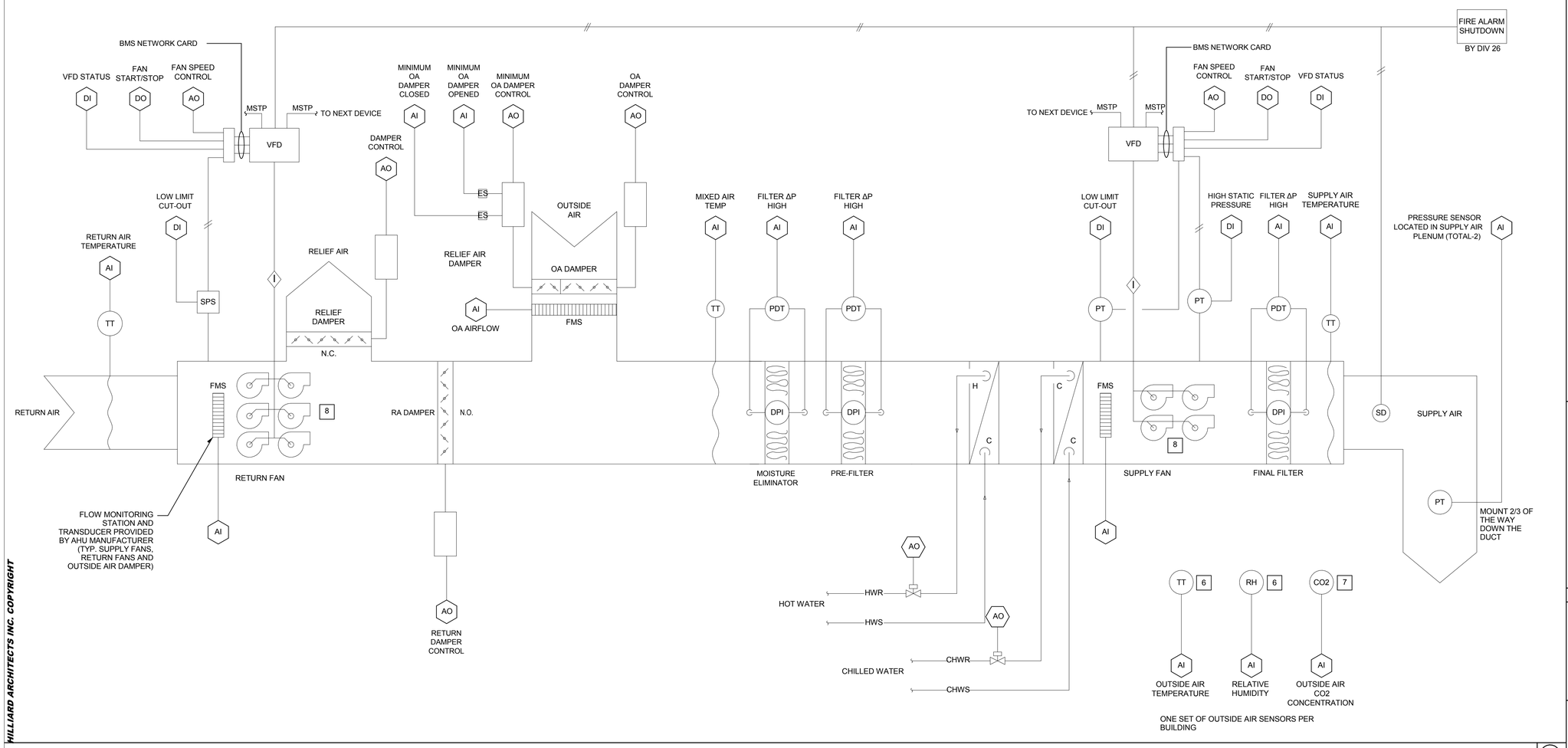

VARIABLE AIR VOLUME AIR HANDLING UNIT WITH MINIMUM OUTSIDE AIR AND 100% OA ECONOMIZER CONTROL DIAGRAM (1)

CONTROLS SYMBOLS

T	ROOM THERMOSTAT/TRANSMITTER - WALL MOUNT
M	ROOM HUMIDISTAT (MOISTURE)/TRANSMITTER - WALL MOUNT
TT	TEMPERATURE TRANSMITTER
TT	TEMPERATURE TRANSMITTER, AVERAGING ELEMENT
MT	MOISTURE (HUMIDITY) TRANSMITTER
PT	PRESSURE TRANSMITTER
SPS	STATIC PRESSURE SENSOR
FT	FLOW TRANSMITTER
IT	CURRENT TRANSMITTER
CT	CONDUCTIVITY TRANSMITTER
SD	SMOKE DETECTOR
PDT	PRESSURE DIFFERENTIAL TRANSMITTER
PDS	PRESSURE DIFFERENTIAL SWITCH
HS	HAND SWITCH (HAND-OFF-AUTO SWITCH)
ZC	VALVE OR DAMPER POSITION CONTROLLER
KR	LOCAL RECORDING TIME CLOCK (RUNTIME)
TSL	TEMPERATURE SWITCH, LOW (FREEZESTAT)
TSH	TEMPERATURE SWITCH, HIGH
LC	LEVEL CONTROLLER
LT	LEVEL TRANSMITTER
PSH	PRESSURE SWITCH HIGH
PSL	PRESSURE SWITCH LOW
EPT	ELECTRONIC TO PNEUMATIC TRANSDUCER
AT_{CO2}	CARBON DIOXIDE TRANSMITTER
AT_{CO}	CARBON MONOXIDE TRANSMITTER
AT_{OC}	OCCUPANCY SENSOR
LTCP	LOCAL TEMPERATURE CONTROL PANEL
HVAC	HVAC CONTROL PANEL
VSMC	VARIABLE SPEED MOTOR CONTROLLER
ECC	INTEGRATE CONTROL POINT ON REMOTE GRAPHICS WORKSTATION AT ENERGY CONTROL CENTER
TC	TEMPERATURE CONTROLLER. SEE SEQUENCE OF OPERATION
PC	PRESSURE CONTROLLER. SEE SEQUENCE OF OPERATION
SC	SPEED CONTROLLER. SEE SEQUENCE OF OPERATION
FC	FLOW CONTROLLER. SEE SEQUENCE OF OPERATION
FSH	FLOW SWITCH HIGH
FSL	FLOW SWITCH LOW
KC	TIME CLOCK CONTROLLING EQUIPMENT ON A SCHEDULE

SHEET NOTES:

1. AS AN EXPERT IN THE PROPER APPLICATION OF CONTROL COMPONENTS AND THE DDC SYSTEM THE CONTROLS CONTRACTOR SHALL BE RESPONSIBLE FOR THE CONTROL SYSTEM DESIGN, INSTALLATION, COMMISSIONING AND OPERATION OF THE CONTROL SYSTEM TO ACHIEVE THE DESIGN INTENT OF THIS PROJECT.
2. CONTROL SCHEMATIC DIAGRAMS SHOWN ON THE DRAWINGS AND THE SEQUENCE OF OPERATION INDICATE GENERAL DESIGN INTENT HOWEVER THE CONTROLS CONTRACTOR SHALL MAKE ADDITIONS AND/OR MODIFICATIONS TO THE DESIGN AS REQUIRED AT NO ADDITIONAL COST TO THE OWNERS AND SHALL WORK WITH MECHANICAL ENGINEER AND OBTAIN APPROVAL FOR ANY NECESSARY REVISIONS TO ACHIEVE THE DESIGN INTENT OF THIS PROJECT.
3. THE CONTROLS CONTRACTOR SHALL COORDINATE LOCATIONS OF CONTROL PANELS AND COMPONENTS WITH THE ELECTRICAL CONTRACTOR TO PROVIDE POWER.
4. CONTROL CONTRACTOR SHALL COORDINATE EXACT REQUIREMENT OF CONTROL HARDWARE WITH ALL ASSOCIATED TRADES AS NECESSARY TO ACHIEVE THE DESIGN INTENT OF THIS PROJECT PER CONTRACT DRAWINGS AND SPECIFICATIONS.
5. CONTROLS CONTRACTOR SHALL SUBMIT DETAILED SHOP DRAWINGS WITH CONTROL DIAGRAMS AND SEQUENCE OF OPERATIONS FOR ENGINEERS APPROVAL.

CONTROL LEGEND

AO	ANALOG OUTPUT	SA	SUPPLY AIR
AI	ANALOG INPUT	TEMP.	TEMPERATURE
DO	DIGITAL OUTPUT	OSA	OUTSIDE AIR
DI	DIGITAL INPUT	RA	RETURN AIR
SD	SMOKE DETECTOR	TUX	TERMINAL UNIT CONTROLLER
TS	TEMPERATURE SENSOR	PT	POINT
CS	CURRENT SENSOR		

FINAL BID DOCUMENTS

HILLIARD ARCHITECTS INC. COPYRIGHT

Revisions: Date

CONSULTANTS:

SYSKA HENNESSY GROUP
A member company of SH Group, Inc.

Syska Hennessy Group, Inc.
425 California Street
Suite 700
San Francisco, CA 94104
Tel: 415.288.9060
Fax: 415.835.0385
www.syska.com

REGISTERED PROFESSIONAL ENGINEER
PRASAD V. MORE
No. M35846
Exp.Mar.31.2014
MECHANICAL
STATE OF CALIFORNIA

ARCHITECT/ENGINEERS:

ESTABLISHED 1988 HILLIARD ARCHITECTS GOING GREEN

HILLIARD ARCHITECTS, INC
251 Post Street, Suite 620
San Francisco, CA 94108-5017
Tel 415 989 6400, Fax 415 989 3056
www.HilliardArchitects.com

Drawing Title: **MECHANICAL CONTROLS DIAGRAMS**	Project Title: **VA PA BLDG 6 LAB RENOVATION**	Project Number: **640-13-121P**	Office of Construction and Facilities Management
Approved: Project Director	Location: **VAPAHCS, PALO ALTO CAMPUS 3801 MIRANDA AVE. PALO ALTO, CA 94304**	Building Number: **6**	
	Date: **04.17.2014** / Checked: **PVM** / Drawn: **JP**	Drawing Number: **C701** Dwg. of	Department of Veterans Affairs

VA FORM 08-6231

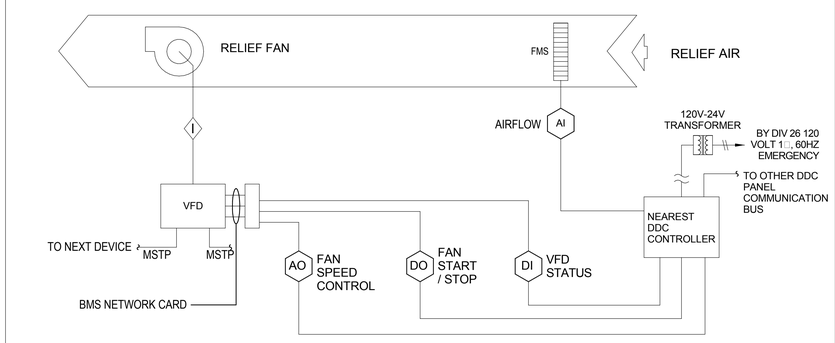

CONTROL SCHEMATIC FOR RELIEF FAN WITH VFD (FOR 6-AHU-B) 5

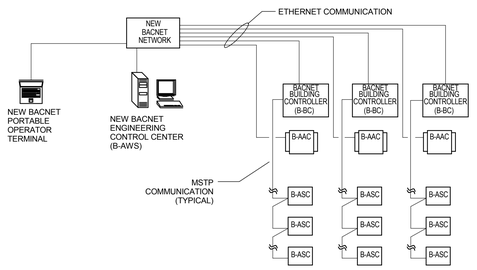

CONTROL SYSTEM CONFIGURATION
OPTION 1 -
NEW BACNET ECC, UPGRADE EXISTING CONTROLS WITH NEW BACNET CONTROLS SYSTEM, INSTALL NEW BACNET COMMUNICATIONS NETWORK.

NOTES:
1. REPLACE EXISTING ECC WITH NEW BACNET (B-AWS) ENGINEERING CONTROL CENTER.
2. REPLACE ALL EXISTING CONTROLLERS WITH NEW BACNET CONTROLLERS.
3. INSTALL NEW BACNET COMMUNICATION NETWORK.
4. INSTALL MULTIPLE BUILDING CONTROLLERS (B-BC) AS REQUIRED.
5. INSTALL NEW CONTROLLERS (B-AAC, B-ASC) AS REQUIRED.
6. PROVIDE NEW PORTABLE OPERATORS TERMINAL.

BACNET SYSTEM ARCHITECTURE 4

NOTES:

1. WIRE THRU SMOKE DETECTOR OR OTHER EMERGENCY SHUT DOWN CONTACTS. (JUMPER IF NOT REQUIRED).
2. WIRE THRU DO OR OTHER AUTOMATIC START/STOP CONTACTS.

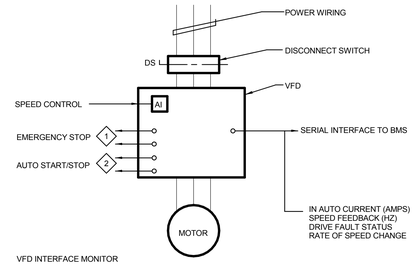

VFD INTERFACE MONITOR

A. VFDS ARE LOCATED WITH THE CHILLED WATER PUMPS AND AIR HANDLING UNITS. VFDS SHALL BE MONITORED AND CONTROLLED BY THE BMS.

B. STATUS AND OPERATING CONDITIONS SHALL BE MONITORED THROUGH THE DRIVE COMMUNICATION/SERIAL INTERFACE.

VFD WIRING DIAGRAM 3

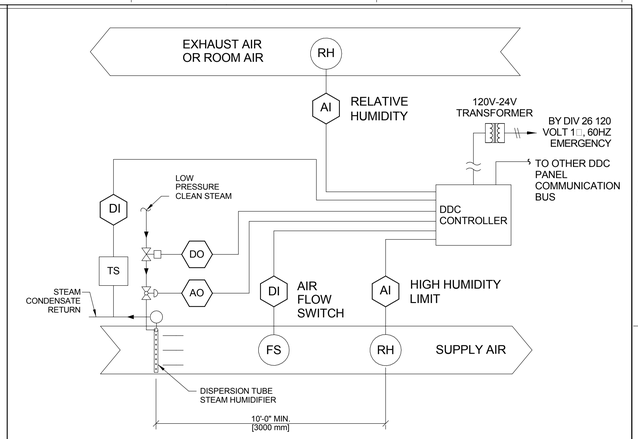

CONTROL SCHEMATIC FOR CLEAN STEAM HUMIDIFIER 2

NOTES FOR AHU UNITS

1. THE DDC PANELS SHALL CONTAIN ALL CONTROL DEVICES, RELAYS, SWITCHES AND CONTROLLERS ETC. THAT ARE PART OF THE CONTROL SYSTEM.
2. THE DDC PANEL MAY CONSIST OF MORE THAN ONE PANEL BUT IN SUCH INSTANCES ALL PANELS SHALL BE MOUNTED ON A COMMON BACK BOARD IN ONE LOCATION.
3. ALL LOW VOLTAGES LINES AND ELECTRICAL POWER WIRING SHALL TERMINATE AT ONE POINT FOR EACH PANEL OR GROUP OF PANELS.
4. PROVIDE AND INSTALL ALL 120 VOLT POWER WIRING AS REQUIRED FOR DDC CONTROL PANELS / CONTROLLERS.
5. FURNISH A SEPARATE PRESSURE SWITCH IN THE SUPPLY FAN CABINET AND RETURN FAN CABINET OF EACH AIR HANDLING UNIT. EACH PRESSURE SWITCH SHALL BE ELECTRICALLY WIRED TO SHUT DOWN ITS RESPECTIVE FAN AND SHALL BE FURNISHED WITH A MANUAL RESET BUTTON. "DWYER" OR EQUAL.
6. OUTSIDE AIR TEMPERATURE AND HUMIDITY SHALL BE PROVIDED TO THE DDC PANELS.
7. OUTSIDE AIR CO2 DDC PANEL OF EACH AIR HANDLER CONCENTRATION SHALL BE PROVIDED TO THE DDC PANELS.
8. TWO FANS AND VFD'S ARE SHOWN IN THIS DETAIL. HOWEVER, REFER TO MECHANICAL SCHEDULES FOR ACTUAL NUMBER OF FANS AND VFD'S.

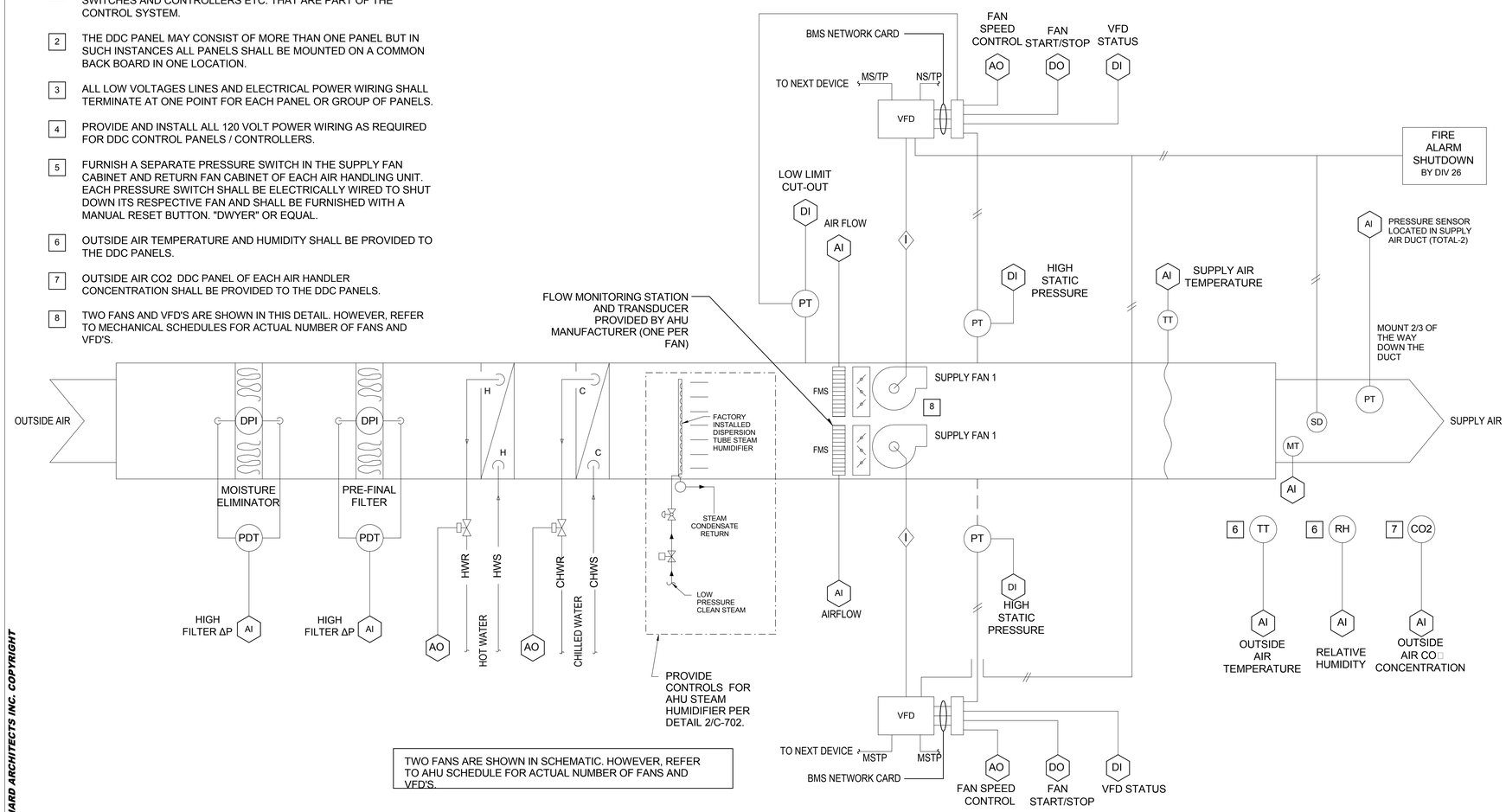

TWO FANS ARE SHOWN IN SCHEMATIC. HOWEVER, REFER TO AHU SCHEDULE FOR ACTUAL NUMBER OF FANS AND VFD'S.

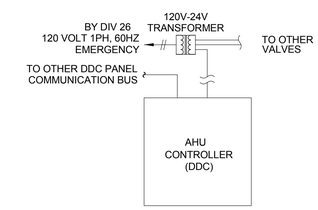

GENERAL NOTES:

1. WIRING TO FIRE ALARM SYSTEM BY ELECTRICAL.
2. HARD WIRE DUCT SMOKE DETECTOR TO CAUSE INSTANTANEOUS AUTOMATIC SHUT DOWN OF THE FAN THROUGH THE VFD OF THE UNIT.
3. BACNET MS/TP INTERFACE TO CONTROLLER SEE VFD WIRING SCHEMATIC DIAGRAM.
4. VFD CONTROL PANEL SHALL BE FACTORY INSTALLED AND WIRED BY THE AIR HANDLING UNIT MANUFACTURER FOR SINGLE POINT POWER CONNECTION. MECHANICAL AND CONTROLS CONTRACTOR SHALL COORDINATE THE LOCATION OF THE VFD CONTROL PANEL ON THE AIR HANDLING UNIT.
5. BELIMO PRESSURE INDEPENDENT CONTROL VALVES FOR CHW & HW COILS SHALL BE FURNISHED BY CONTROLS CONTRACTOR & INSTALLED BY MECHANICAL CONTRACTOR.
6. FACTORY SUPPLIED AND MOUNTED LOW LEAKAGE CONTROL DAMPER WITH BELIMO 2-10 VDC DAMPER ACTUATOR. INTERLOCK THE DAMPER OPERATION WITH VFD SAFETY CIRCUIT SUCH THAT FAN SHALL START ONLY WHEN THE DAMPER IS OPEN.
7. ALL OUTDOOR EXPOSED CONTROL PANEL AND ENCLOSURES OF THE CONTROLS/DEVICES SHALL BE PROVIDED IN A WEATHER PROOF NEMA3R ENCLOSURES.

CONTROL SCHEMATIC FOR VARIABLE AIR VOLUME AIR HANDLING UNIT WITH 100% OUTSIDE AIR 1

FINAL BID DOCUMENTS

HILLIARD ARCHITECTS INC. COPYRIGHT

Revisions:	Date

CONSULTANTS:

SYSKA HENNESSY GROUP
A member company of SH Group, Inc.
Syska Hennessy Group, Inc.
425 California Street
Suite 700
San Francisco, CA 94104
Tel: 415.288.9060
Fax: 415.835.0385
www.syska.com

REGISTERED PROFESSIONAL ENGINEER PRASAD V. MORE No. M35846 Exp.Mar.31.2014 MECHANICAL STATE OF CALIFORNIA

ARCHITECT/ENGINEERS:

ESTABLISHED 1988 HILLIARD ARCHITECTS GOING GREEN
HILLIARD ARCHITECTS, INC
251 Post Street, Suite 620
San Francisco, CA 94108-5017
Tel 415 989 6400, Fax 415 989 3056
www.HilliardArchitects.com

Drawing Title: MECHANICAL CONTROLS DIAGRAMS	Project Title: VA PA BLDG 6 LAB RENOVATION		Project Number: 640-13-121P
			Building Number: 6
Approved: Project Director	Location: VAPAHCS, PALO ALTO CAMPUS, 3801 MIRANDA AVE. PALO ALTO, CA 94304		Drawing Number: C702
	Date: 04.17.2014	Checked: PVM	Drawn: JP
			Dwg. of

Office of Construction and Facilities Management
Department of Veterans Affairs

VA FORM 08-6231

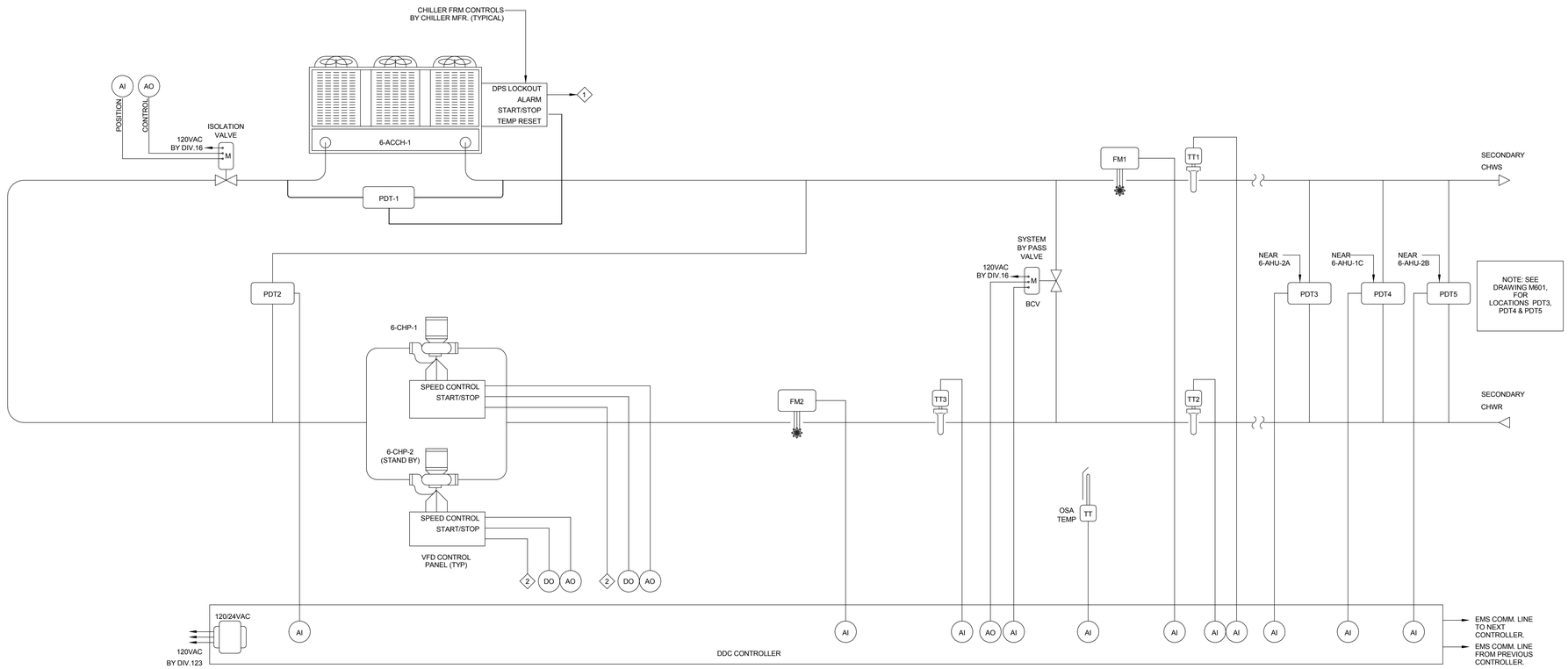

NOTES:

1. PROVIDE SERIAL INTERFACE FROM CHILLER CONTROL PANEL TO EMS TO COMMUNICATE & MONITOR INFORMATION OF CHWS & CHWR TEMPERATURE, CHILLER OPERATING AMPS./CAPACITY, FAILURE ALARM, ENABL/DISABLE, STATUS, TEMPERATURE RESET, STAGES ON, CHW PUMP STATUS.
2. PROVIDE SERIAL INTERFACE TO EMS (SEE DETAIL 3/C-702, VFD WIRING DIAGRAM).

CONTROL SCHEMATIC FOR CHILLED WATER SYSTEM CONTROL (1)

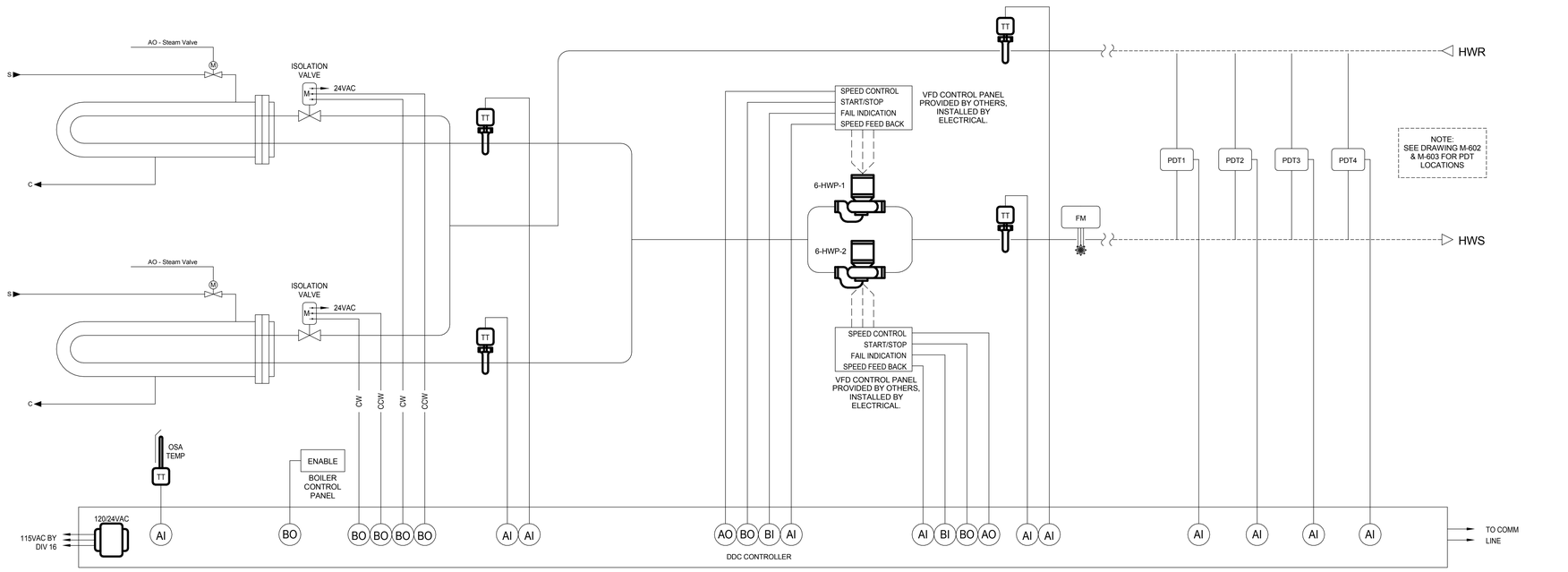

CONTROL SCHEMATIC FOR STEAM TO HEATING HOT WATER HEAT EXCHANGER WITH HEATING HOT WATER PUMPS (4)

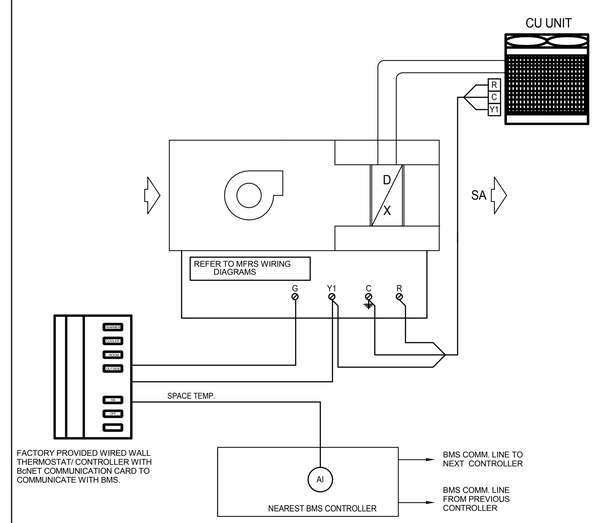

CONTROL SCHEMATIC FOR SPLIT SYSTEM AC UNITS (COOLING ONLY) (2)

FINAL BID DOCUMENTS

HILLIARD ARCHITECTS INC. COPYRIGHT

Revisions:	Date

CONSULTANTS:

SYSKA HENNESSY GROUP
A member company of SH Group, Inc.

Syska Hennessy Group, Inc.
425 California Street
Suite 700
San Francisco, CA 94104
Tel: 415.288.9060
Fax: 415.835.0385
www.syska.com

REGISTERED PROFESSIONAL ENGINEER — PRASAD V. MORE — No. M35846 — Exp.Mar.31,2014 — MECHANICAL — STATE OF CALIFORNIA

ARCHITECT/ENGINEERS:

ESTABLISHED 1988 HILLIARD ARCHITECTS GOING GREEN

HILLIARD ARCHITECTS, INC
251 Post Street, Suite 620
San Francisco, CA 94108-5017
Tel 415 989 6400, Fax 415 989 3056
www.HilliardArchitects.com

Drawing Title: **MECHANICAL CONTROLS DIAGRAMS**

Approved: Project Director

Project Title: **VA PA BLDG 6 LAB RENOVATION**

Location: **VAPAHCS, PALO ALTO CAMPUS 3801 MIRANDA AVE. PALO ALTO, CA 94304**

Date: **04.17.2014** | Checked: **Checker** | Drawn: **Author**

Project Number: **640-13-121P**

Building Number:

Drawing Number: **C703**

Dwg. of

Office of Construction and Facilities Management

Department of Veterans Affairs

VA FORM 08-6231

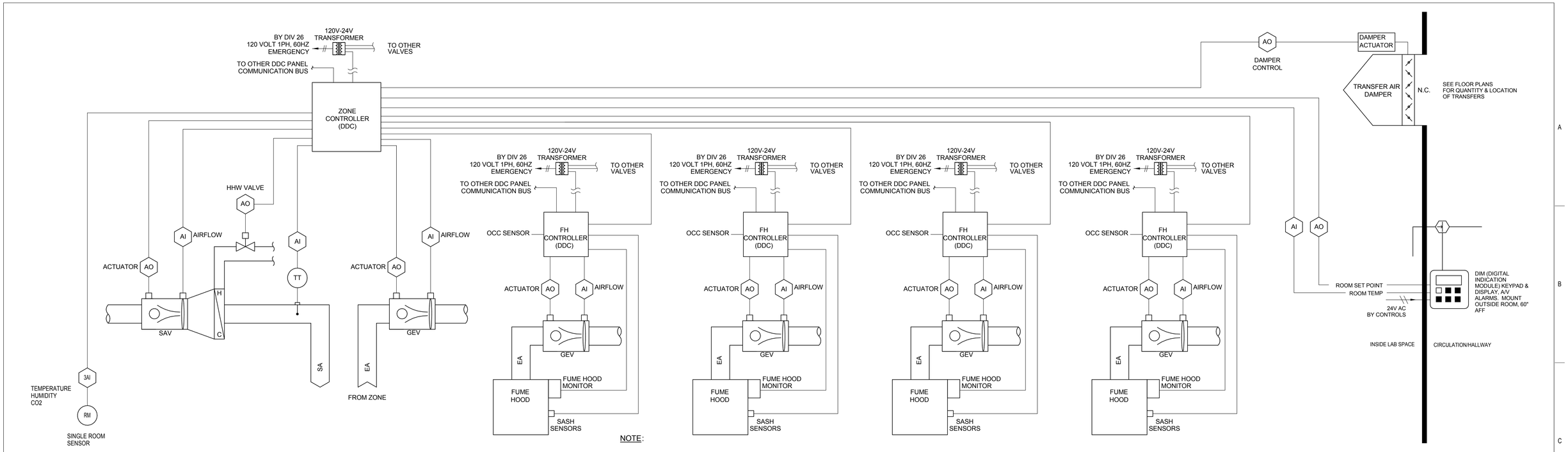

NOTE:

FOUR FUME HOODS AND ASSOCIATED CONTROLS ARE SHOWN IN THIS DIAGRAM. CONTRACTOR SHALL REFER TO FLOOR PLANS FOR ACTUAL NUMBER OF FUME HOODS AND PROVIDE THE CONTROLS ACCORDINGLY.

CONTROL SCHEMATIC FOR SUPPLY & EXHAUST AIR VALVE ZONE CONTROL WITH FUME HOOD(S) (1)

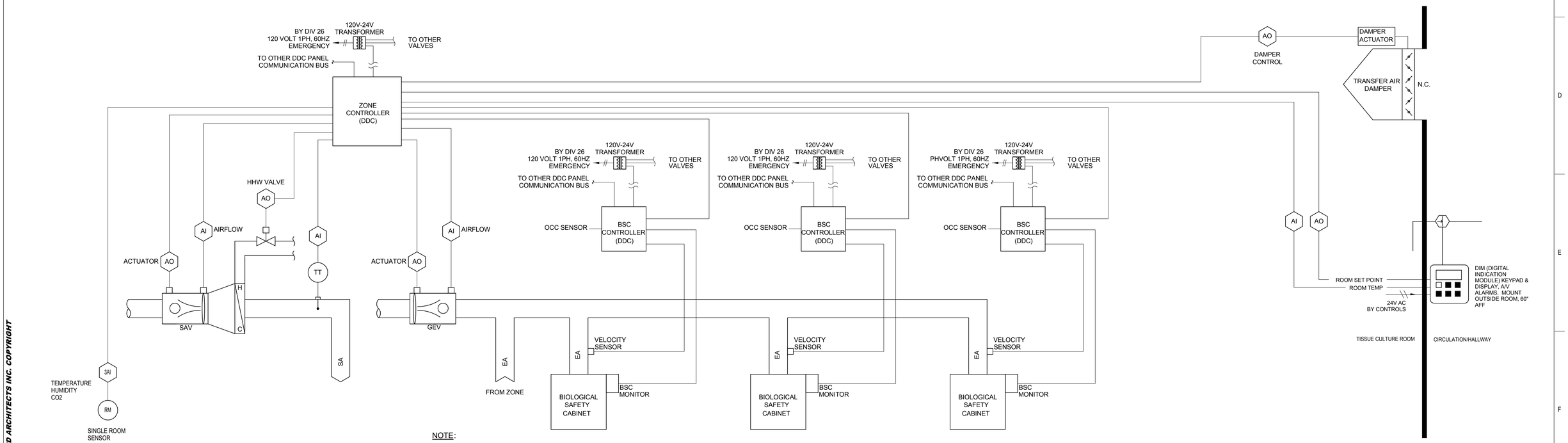

NOTE:

THREE BIOLOGICAL SAFETY CABINETS AND ASSOCIATED CONTROLS ARE SHOWN IN THIS DIAGRAM. CONTRACTOR SHALL REFER TO FLOOR PLANS FOR ACTUAL NUMBER OF BIOLOGICAL SAFETY CABINETS AND PROVIDE THE CONTROLS ACCORDINGLY.

CONTROL SCHEMATIC FOR SUPPLY & EXHAUST AIR VALVE ZONE CONTROL WITH BIOLOGICAL SAFETY CABINET(S) (2)

HILLIARD ARCHITECTS INC. COPYRIGHT

FINAL BID DOCUMENTS

Revisions:	Date

CONSULTANTS:

SYSKA HENNESSY GROUP
A member company of SH Group, Inc.
Syska Hennessy Group, Inc.
425 California Street
Suite 700
San Francisco, CA 94104
Tel: 415.288.9060
Fax: 415.835.0385
www.syska.com

REGISTERED PROFESSIONAL ENGINEER — PRASAD V. MORE — No. M35846 — Exp.Mar.31,2014 — MECHANICAL — STATE OF CALIFORNIA

ARCHITECT/ENGINEERS:

HILLIARD ARCHITECTS, INC
251 Post Street, Suite 620
San Francisco, CA 94108-5017
Tel 415 989 6400, Fax 415 989 3056
www.HilliardArchitects.com

Drawing Title	MECHANICAL CONTROLS DIAGRAMS
Approved: Project Director	
Project Title	VA PA BLDG 6 LAB RENOVATION
Location	VAPAHCS, PALO ALTO CAMPUS 3801 MIRANDA AVE. PALO ALTO, CA 94304
Date	04.17.2014
Checked	PVM
Drawn	JP
Project Number	640-13-121P
Building Number	6
Drawing Number	C704
Dwg. of	

Office of Construction and Facilities Management

Department of Veterans Affairs

VA FORM 08-6231

NOTES FOR EXHAUST FANS

1. THE DDC PANELS SHALL CONTAIN ALL CONTROL DEVICES, RELAYS, SWITCHES AND CONTROLLERS ETC. THAT ARE PART OF THE CONTROL SYSTEM.
2. ALL 120 VOLT POWER WIRING PROVIDED AND INSTALLED AS DESCRIBED IN SHEET M5.00 BY DIV 26
3. REFER TO WIND STUDY REPORT FOR RECOMMENDED DISCHARGE AIR VOLUMES AT VARIOUS WIND VELOCITIES.
4. ALL VFD POINTS READ VIA COMM

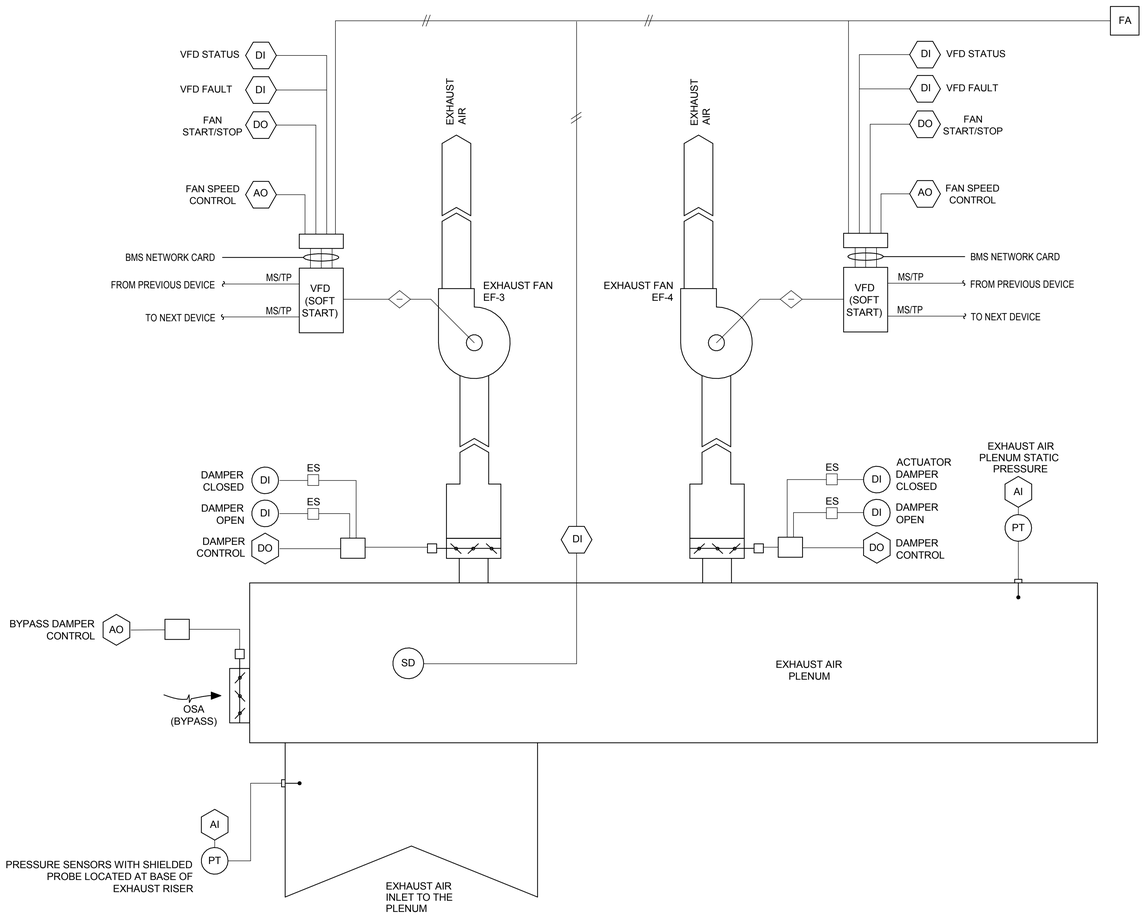

CONTROL SCHEMATIC FOR TYPICAL FUME EXHAUST FAN SYSTEM (3)

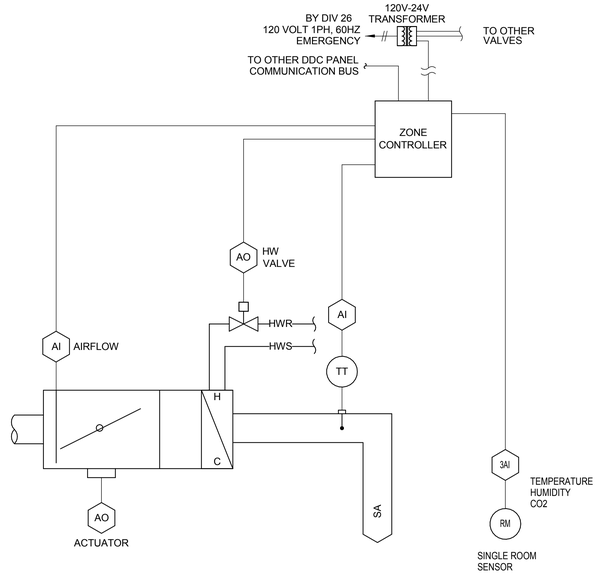

CONTROL SCHEMATIC FOR TYPICAL SUPPLY VAV TERMINAL UNIT WITH REHEAT COIL (1)

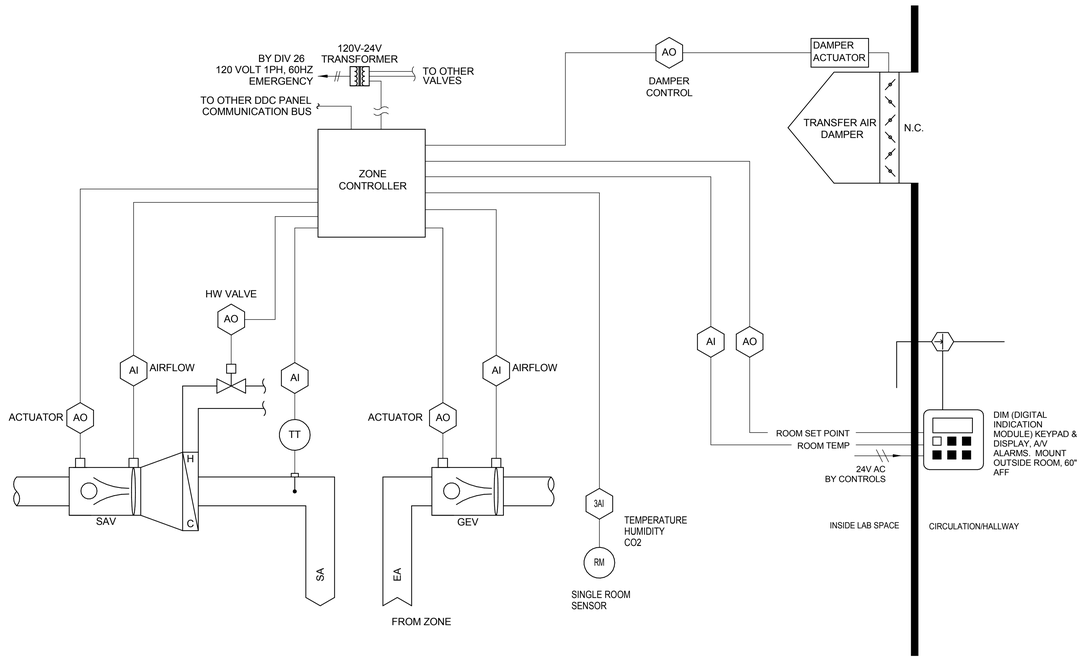

CONTROL SCHEMATIC FOR SUPPLY AND EXHAUST AIR VALVE ZONE CONTROL (2)

FINAL BID DOCUMENTS

HILLIARD ARCHITECTS INC. COPYRIGHT

Revisions:	Date

CONSULTANTS:

SYSKA HENNESSY GROUP
A member company of SH Group, Inc.

Syska Hennessy Group, Inc.
425 California Street
Suite 700
San Francisco, CA 94104
Tel: 415.288.9060
Fax: 415.835.0385
www.syska.com

REGISTERED PROFESSIONAL ENGINEER — PRASAD V. MORE — No. M35846 — Exp.Mar.31,2014 — MECHANICAL — STATE OF CALIFORNIA

ARCHITECT/ENGINEERS:

ESTABLISHED 1988 HILLIARD ARCHITECTS GOING GREEN

HILLIARD ARCHITECTS, INC
251 Post Street, Suite 620
San Francisco, CA 94108-5017
Tel 415 989 6400, Fax 415 989 3056
www.HilliardArchitects.com

Drawing Title: **MECHANICAL CONTROLS DIAGRAMS**	Project Title: **VA PA BLDG 6 LAB RENOVATION**		Project Number: **640-13-121P**
			Building Number: **6**
Approved: Project Director	Location: **VAPAHCS, PALO ALTO CAMPUS 3801 MIRANDA AVE. PALO ALTO, CA 94304**		Drawing Number: **C705**
	Date: **04.17.2014**	Checked: **PVM** / Drawn: **JP**	Dwg. of

Office of Construction and Facilities Management
Department of Veterans Affairs

VA FORM 08-6231