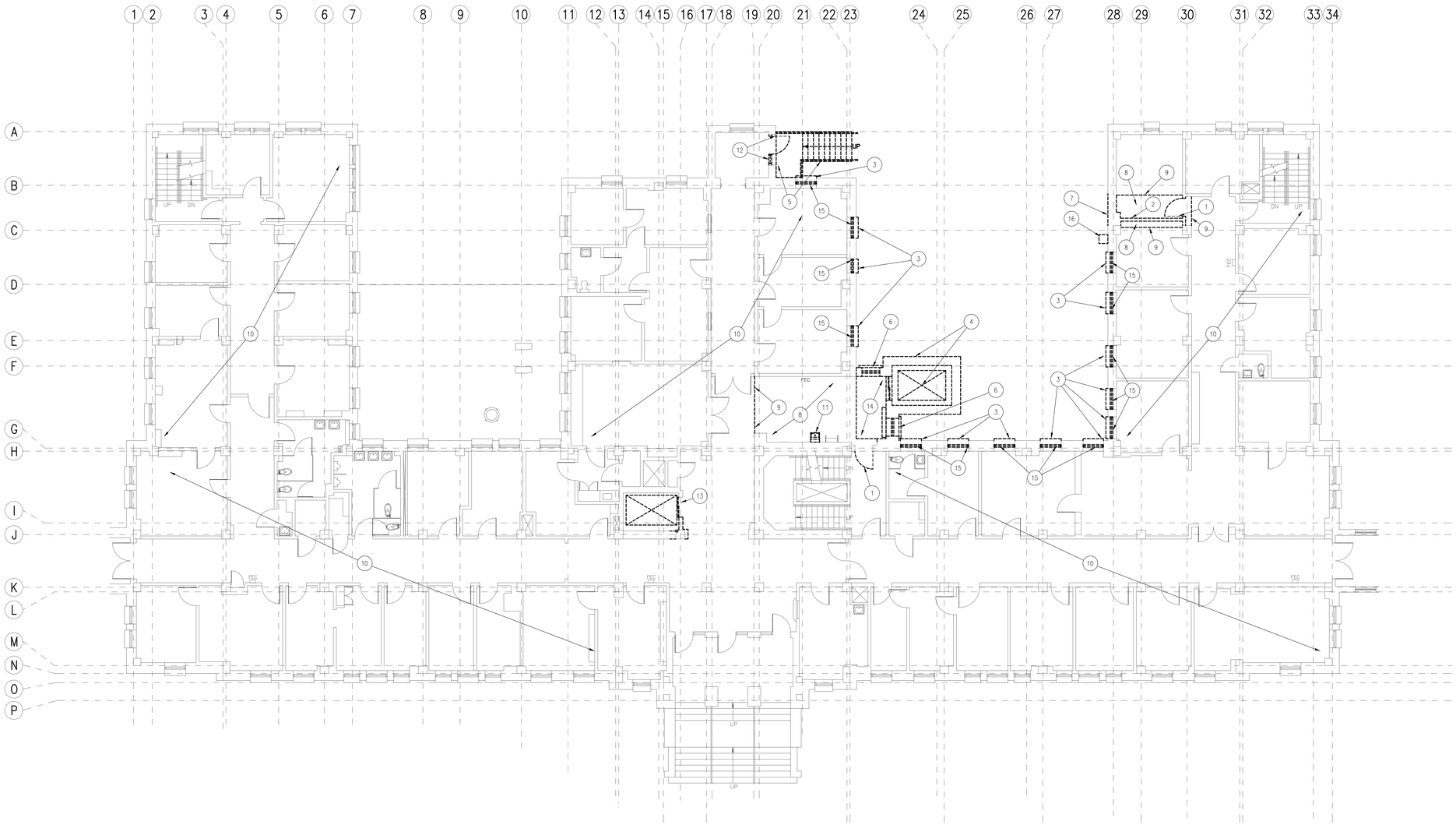

TRUE PLAN

1 FIRST FLOOR DEMOLITION PLAN

SCALE: 1/8" = 1'-0"

GENERAL NOTES:

A. THIS PLAN SHOWS GENERAL DEMOLITION WORK TO BE PERFORMED AND DOES NOT RELIEVE THE CONTRACTOR FROM OTHER DEMOLITION WORK REQUIRED TO PRODUCE THE MODIFICATIONS/ADDITIONS SHOWN ON THE REMAINING CONTRACT DOCUMENTS.

B. FOR DEMOLITION WORK ASSOCIATED WITH THE SITE, REFER TO THE CIVIL DEMOLITION PLAN.

C. ALL ITEMS INDICATED TO BE DEMOLISHED SHALL BE REMOVED FROM THE SITE AND LEGALLY DISPOSED OF BY THE CONTRACTOR.

D. DEMOLITION SHOWN WILL TAKE PLACE IN AN AREA WHERE SURROUNDING BUILDINGS REMAIN OCCUPIED BY HOSPITAL STAFF AND PATIENTS. DUST CONTROL AND NOISE ARE ISSUES OF MAJOR CONCERN IN BUILDING 67. THE CONTRACTOR IS REQUIRED TO MAINTAIN AN AIR-TIGHT DUST BARRIER WITHIN BUILDING 67 DURING THE DURATION OF DUST PRODUCING WORK. WORK THAT CREATES EXCESSIVE NOISE OR DUST MUST BE CAREFULLY COORDINATED AND SCHEDULED WITH THE HOSPITAL.

E. CONTRACTOR SHALL ERECT BARRICADES, SAFETY SIGNS, AND OTHER SIMILAR ITEMS AS REQUIRED FOR THE PROTECTION OF ALL PERSONNEL, HOSPITAL STAFF, PATIENTS, AND GENERAL PUBLIC DURING DEMOLITION AND REMOVAL OPERATIONS.

F. CONTRACTOR SHALL PROTECT SURROUNDING BUILDING COMPONENTS AND VEGETATION, NOT INDICATED TO BE DEMOLISHED, FROM DAMAGE DURING DEMOLITION AND REMOVAL OPERATIONS.

G. REMOVE PORTIONS OF CEILING AS NEEDED TO ACCOMMODATE ADJACENT WALL DEMOLITION AND NEW CONSTRUCTION. CW/ NEW PLANS, MECHANICAL, PLUMBING, AND ELECTRICAL DEMOLITION DRAWINGS FOR ADDITIONAL CEILING DEMOLITION REQUIREMENTS.

H. CONTRACTOR IS RESPONSIBLE FOR ALL DEMOLITION AND HAZARDOUS MATERIAL REMOVAL, REFER TO "LEAD MANAGEMENT PLAN FINAL 31 OCT 11" FOR LOCATIONS OF LEAD BASED PAINTS. SPECIFICATIONS CALLS FOR "LEAD DEMOLITION AND STABILIZATION" VS. "LEAD ABATEMENT". STABLE AREAS OF LEAD-BASED PAINT ON SURFACES THAT ARE TO REMAIN AND ARE NOT INDICATED TO BE REMOVED ON THE DRAWINGS MAY REMAIN UNDISTURBED. IN AREAS WHERE LEAD-BASED PAINT IS CRACKING AND PEELING, STABILIZE AND ENCAPSULATE WITH "LEAD SAFE WORKING PRACTICES". RE: SPECIFICATIONS 02 83 33.13 FOR ADDITIONAL INFORMATION.

I. CONTRACTOR IS TO REMOVE ALL WALL MOUNTED SIGNAGE, BULLETIN BOARDS, CHART HOLDERS, ETC. PRIOR TO DEMOLITION UNLESS DIRECTED OTHERWISE. TURN ALL REQUESTED REMOVED ITEMS OVER TO THE VA. THE VA WILL BE RESPONSIBLE FOR REINSTALLATION OF THESE ITEMS.

J. CONTRACTOR RESPONSIBLE FOR ASBESTOS ABATEMENT, RE: SPECIFICATIONS 02 82 11, 02 82 13.13, AND 02 82 13.19, FOR LOCATIONS AND REQUIREMENTS.

K. CONTRACTOR RESPONSIBLE FOR FIRE STOPPING ALL PENETRATIONS THAT ARE ABANDONED OR PENETRATIONS THAT ARE CREATED BY REQUIRED DEMOLITION AT RATED ASSEMBLIES, IN ACCORDANCE WITH NFPA STANDARDS. RE: G1.1, CODE DATA FOR FIRE RESISTIVE RATINGS.

SHEET NOTES:

1. EXISTING DOOR TO BE DEMOLISHED.
2. EXISTING WALL TO BE DEMOLISHED.
3. EXISTING WINDOW SILL TO BE DEMOLISHED FLUSH WITH FACE OF BRICK WALL.
4. EXISTING ELEVATOR AND ELEVATOR SHAFT TO BE DEMOLISHED. RE: A0.4 FOR ADDITIONAL CONSTRUCTION DEMOLITION. THIS IS TO OCCUR AFTER COMPLETION OF OTHER ELEVATOR MODERNIZATION.
5. EXISTING STAIRS AND RAILING TO BE REMOVED. PATCH AND REPAIR EXTERIOR WALL TO MATCH EXISTING ADJACENT BRICK FINISH.
6. REMOVE WINDOW AND PORTION OF EXISTING EXTERIOR WALL AS NEEDED FOR NEW CONSTRUCTION, RE: A1.1 AND A1.4.
7. REMOVE PORTION OF EXISTING EXTERIOR WALL AS NEEDED FOR NEW CONSTRUCTION, RE: A1.1 AND A1.4.
8. REMOVE PORTION OF EXISTING FLOOR FINISH AS NEEDED FOR NEW CONSTRUCTION AND PREPARE FLOOR TO RECEIVE NEW FLOOR FINISH, RE: A1.1, A1.4 AND A6.1.
9. DASHED LINE INDICATES EXTENT OF FLOOR FINISH REMOVAL.
10. EXISTING CONSTRUCTION TO REMAIN AND BE PROTECTED.
11. EXISTING DRINKING FOUNTAIN TO BE REMOVED.
12. EXISTING DOOR AND WINDOW SYSTEM TO BE REMOVED AND OPENING PREPPED TO BE INFILLED TO MATCH EXISTING ADJACENT CONSTRUCTION.
13. REMOVE EXISTING ELEVATOR; MODIFY EXISTING HOISTWAY AND HOISTWAY OPENING AS NEEDED FOR NEW ELEVATOR, RE: ELEVATOR SPECIFICATION AND STRUCTURAL DRAWINGS. ELEVATION MODERNIZATION TO BE COMPLETED PRIOR TO DEMOLITION OF OTHER ELEVATOR.
14. EXISTING FLOOR SLAB TO BE DEMOLISHED.
15. WINDOW TO BE DEMOLISHED.
16. EXISTING ABANDONED VENTILATION STACK TO BE REMOVED FROM BASEMENT TO ROOF.

LEGEND:

EXISTING CONSTRUCTION TO REMAIN.

EXISTING CONSTRUCTION TO BE REMOVED AND LEGALLY DISPOSED BY THE CONTRACTOR, UNLESS OTHERWISE NOTED.

REVISIONS	DATE

CSHQA

C.W. MOORE PLAZA
250 S. 5TH ST. BOISE, ID 83702
(208) 343-4635 FAX (208) 343-1858
http://www.cshqa.com

JOHN D. MAULIN, ARCHITECT
C.W. MOORE PLAZA
250 S. 5TH ST
BOISE, IDAHO
PHONE: 208-343-4635 FAX: 208-343-1858

THESE DRAWINGS AND SPECIFICATIONS, AS INSTRUMENTS OF SERVICE, ARE AND SHALL REMAIN THE PROPERTY OF THE ARCHITECT / ENGINEER WHETHER THE PROJECT FOR WHICH THEY ARE MADE IS EXECUTED OR NOT. THESE DRAWINGS AND SPECIFICATIONS SHALL NOT BE USED BY ANY PERSON OR ENTITY ON OTHER PROJECTS, FOR ADDITIONS TO THIS PROJECT, OR COMPLETION OF THIS PROJECT-WHEN PHASED-WITHOUT THE WRITTEN CONSENT OF CSHQA OR ITS AFFILIATES. Copyright©2013

STAMP
LICENSED ARCHITECT AR 1706
JOHN D. MAULIN
STATE OF IDAHO
JULY 12, 2013

ORIGINAL DOCUMENT SIGNED BY ARCHITECT ON FILE WITH THE OWNER
ORIGINAL SIGNED BY: JOHN D. MAULIN
ORIGINAL DATE SIGNED: JULY 12, 2013

CAD FILE NAME: 531-320_A0.1.DWG

XREF FILE NAME: 531-320_30X42TLBK.DWG
531-320_67A1.DWG
531-320_67GRID.DWG

DRAWING TITLE: FIRST FLOOR DEMOLITION PLAN

APPROVED: CHIEF OF FACILITY MANAGEMENT SERVICE

APPROVED: MEDICAL CENTER DIRECTOR

PROJECT TITLE: BOISE VAMC BUILDING 67 EXPANSION

BUILDING NUMBER	CHECKED	DRAWN
67	JDM	TWM

LOCATION: VAMC BOISE, IDAHO

DATE: 07/12/2013
PROJECT NO. 531-320
DRAWING NO. A0.1

DEPARTMENT OF VETERANS AFFAIRS

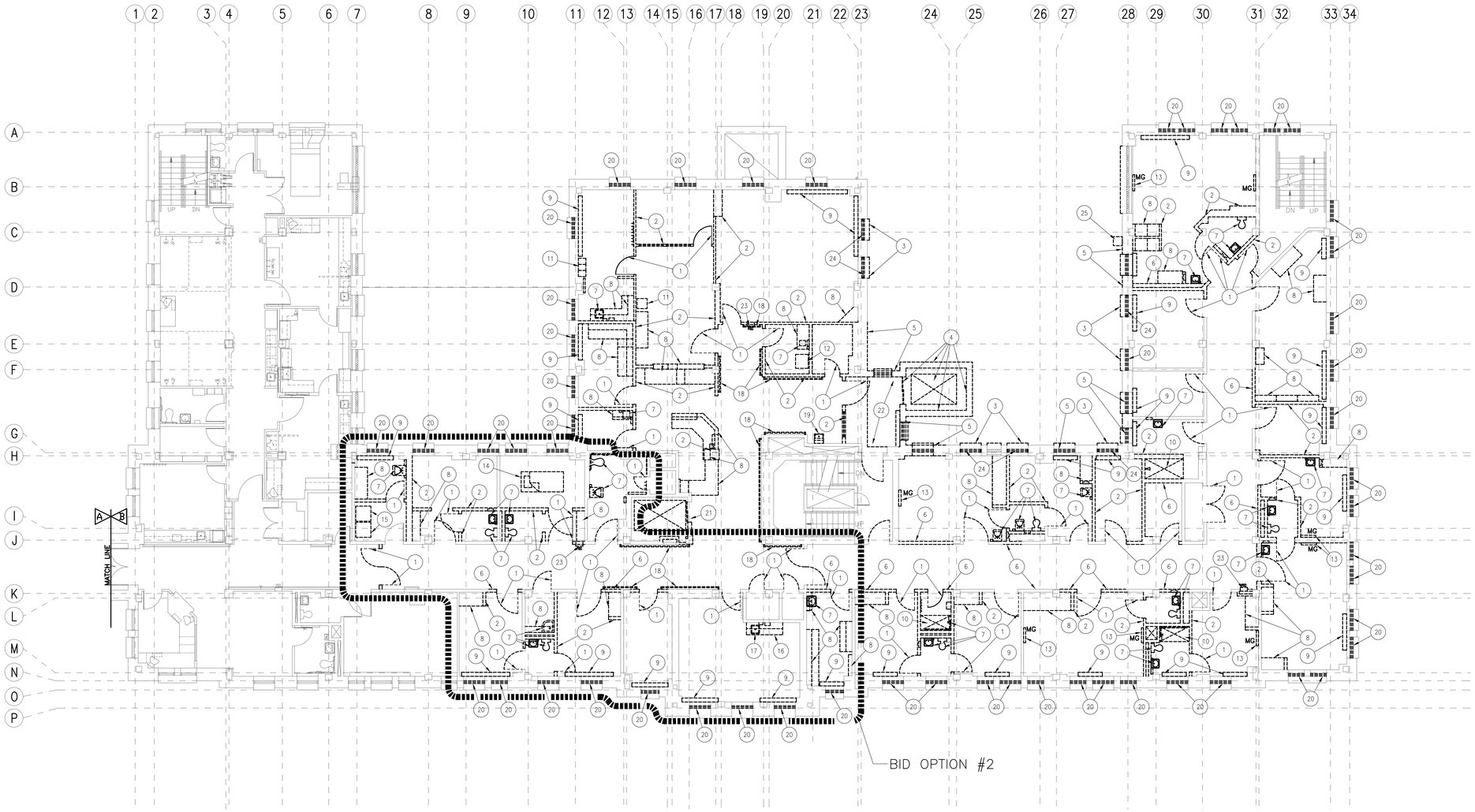

TRUE PLAN

1 SECOND FLOOR DEMOLITION PLAN

SCALE: 1/8" = 1'-0"

GENERAL NOTES:

A. THIS PLAN SHOWS GENERAL DEMOLITION WORK TO BE PERFORMED AND DOES NOT RELIEVE THE CONTRACTOR FROM OTHER DEMOLITION WORK REQUIRED TO PRODUCE THE MODIFICATIONS/ADDITIONS SHOWN ON THE REMAINING CONTRACT DOCUMENTS.

B. FOR DEMOLITION WORK ASSOCIATED WITH THE SITE, REFER TO THE CIVIL DEMOLITION PLAN.

C. ALL ITEMS INDICATED TO BE DEMOLISHED SHALL BE REMOVED FROM THE SITE AND LEGALLY DISPOSED OF BY THE CONTRACTOR.

D. DEMOLITION SHOWN WILL TAKE PLACE IN AN AREA WHERE SURROUNDING BUILDINGS REMAIN OCCUPIED BY HOSPITAL STAFF AND PATIENTS. DUST CONTROL AND NOISE ARE ISSUES OF MAJOR CONCERN IN BUILDING 67. THE CONTRACTOR IS REQUIRED TO MAINTAIN AN AIR-TIGHT DUST BARRIER WITHIN BUILDING 67 DURING THE DURATION OF DUST PRODUCING WORK. WORK THAT CREATES EXCESSIVE NOISE OR DUST MUST BE CAREFULLY COORDINATED AND SCHEDULED WITH THE HOSPITAL.

E. CONTRACTOR SHALL ERECT BARRICADES, SAFETY SIGNS, AND OTHER SIMILAR ITEMS AS REQUIRED FOR THE PROTECTION OF ALL PERSONNEL, HOSPITAL STAFF, PATIENTS, AND GENERAL PUBLIC DURING DEMOLITION AND REMOVAL OPERATIONS.

F. CONTRACTOR SHALL PROTECT SURROUNDING BUILDING COMPONENTS AND VEGETATION, NOT INDICATED TO BE DEMOLISHED, FROM DAMAGE DURING DEMOLITION AND REMOVAL OPERATIONS.

G. REMOVE PORTIONS OF CEILING AS NEEDED TO ACCOMMODATE ADJACENT WALL DEMOLITION AND NEW CONSTRUCTION. CW/ NEW PLANS, MECHANICAL, PLUMBING, AND ELECTRICAL DEMOLITION DRAWINGS FOR ADDITIONAL CEILING DEMOLITION REQUIREMENTS.

H. TOILET PAPER, SOAP, HAND SANITIZER AND PAPER TOWEL DISPENSERS, GRAB BARS AND MIRRORS TO BE REMOVED AND RETURNED TO OWNER STOCK. CW/ OWNER.

I. EXISTING FLOOR FINISHES IN AREA OF REMODEL TO BE REMOVED, PATCH AND REPAIR FLOORS AS REQUIRED TO RECEIVE NEW FLOOR FINISHES, CW/ ROOM FINISH SCHEDULES AND FLOOR FINISH PLANS.

J. EXISTING WALL COVERINGS IN AREA OF REMODEL TO BE REMOVED, PREPARE WALLS TO RECEIVE NEW FINISH, CW/ ROOM FINISH SCHEDULE.

K. CONTRACTOR IS RESPONSIBLE FOR ALL DEMOLITION AND HAZARDOUS MATERIAL REMOVAL, REFER TO 'LEAD MANAGEMENT PLAN FINAL 31 OCT 11' FOR LOCATIONS OF LEAD BASED PAINTS. SPECIFICATIONS CALLS FOR "LEAD DEMOLITION AND STABILIZATION" VS. "LEAD ABATEMENT". STABLE AREAS OF LEAD-BASED PAINT ON SURFACES THAT ARE TO REMAIN AND ARE NOT INDICATED TO BE REMOVED ON THE DRAWINGS MAY REMAIN UNDISTURBED, IN AREAS WHERE LEAD-BASED PAINT IS CRACKING AND PEELING, STABILIZE AND ENCAPSULATE WITH "LEAD SAFE WORKING PRACTICES". RE: SPECIFICATION 02 83 33.13 FOR ADDITIONAL INFORMATION.

L. CONTRACTOR IS TO REMOVE ALL WALL MOUNTED SIGNAGE, BULLETIN BOARDS, CHART HOLDERS, ETC. PRIOR TO DEMOLITION UNLESS DIRECTED OTHERWISE. TURN ALL REQUESTED REMOVED ITEMS OVER TO THE VA. THE VA WILL BE RESPONSIBLE FOR REINSTALLATION OF THESE ITEMS.

M. CONTRACTOR RESPONSIBLE FOR ASBESTOS ABATEMENT, RE: SPECIFICATIONS 02 82 11, 02 82 13.13, AND 02 82 13.19, FOR LOCATIONS AND REQUIREMENTS.

N. CONTRACTOR RESPONSIBLE FOR FIRE STOPPING ALL PENETRATIONS THAT ARE ABANDONED OR PENETRATIONS THAT ARE CREATED BY REQUIRED DEMOLITION AT RATED ASSEMBLIES, IN ACCORDANCE WITH NFPA STANDARDS. RE: G1.2, CODE DATA FOR FIRE RESISTIVE RATINGS.

SHEET NOTES:

1. EXISTING DOOR TO BE DEMOLISHED.
2. EXISTING WALL TO BE DEMOLISHED.
3. EXISTING WINDOW SILL TO BE DEMOLISHED FLUSH WITH FACE OF BRICK WALL.
4. EXISTING ELEVATOR AND ELEVATOR SHAFT TO BE DEMOLISHED.
5. REMOVE WINDOW AND PORTION OF EXTERIOR WALL AS NEEDED FOR NEW CONSTRUCTION, RE: A1.2 AND A1.5.
6. PORTION OF EXISTING WALL TO BE REMOVED AS NEEDED FOR NEW CONSTRUCTION, RE: A1.2 AND A1.5.
7. EXISTING PLUMBING FIXTURE TO BE REMOVED, RE: PLUMBING DRAWINGS.
8. EXISTING MILLWORK TO BE REMOVED, PATCH WALL TO REMAIN.
9. EXISTING RADIATORS, TO BE REMOVED, CW/ MECHANICAL DRAWINGS.
10. EXISTING SHOWER STALL TO BE DEMOLISHED. CW/ PLUMBING DRAWINGS.
11. EXISTING LOCKERS TO BE REMOVED.
12. EXISTING ICE MACHINE TO BE RELOCATED. CW/ EQUIPMENT PLAN AND PLUMBING DRAWINGS.
13. EXISTING HEAD WALL TO BE REMOVED, CW/ PLUMBING DRAWINGS FOR MEDICAL GAS DEMOLITION.
14. EXISTING PATIENT BED SECURED TO THE FLOOR TO BE REMOVED.
15. EXISTING WASHER AND DRYER SECURED TO THE FLOOR TO BE REMOVED.
16. EXISTING MILLWORK TO BE REMOVED, PATCH WALL TO REMAIN AS NEEDED.
17. EXISTING PLUMBING FIXTURE TO BE REMOVED, RE: PLUMBING DRAWINGS.
18. EXISTING HANDRAILS TO BE REMOVED THROUGHOUT AREA OF REMODEL.
19. EXISTING DRINKING FOUNTAIN TO BE REMOVED.
20. REMOVE WINDOW AND PREP OPENING TO RECEIVE NEW WINDOW.
21. REMOVE EXISTING ELEVATOR; MODIFY EXISTING HOISTWAY AND HOISTWAY OPENING AS NEEDED FOR NEW ELEVATOR, RE: ELEVATOR SPECIFICATION AND STRUCTURAL DRAWINGS.
22. EXISTING FLOOR SLAB TO BE DEMOLISHED.
23. EXISTING SEMI-RECESSED FIRE EXTINGUISHER CABINET TO BE REMOVED; EXISTING LOCKING/ALARMING DEVICES TO BE SALVAGED TO BE RE-INSTALLED IN NEW FIRE EXTINGUISHER CABINETS. CW/ FIRE PROTECTION PLAN.
24. EXISTING WINDOW TO BE DEMOLISHED.
25. EXISTING ABANDONED VENTILATION STACK TO BE REMOVED FROM BASEMENT TO ROOF.

LEGEND:

EXISTING CONSTRUCTION TO REMAIN.

EXISTING CONSTRUCTION TO BE REMOVED AND LEGALLY DISPOSED BY THE CONTRACTOR, UNLESS OTHERWISE NOTED.

REVISIONS	DATE

CSHQA

C.W. MOORE PLAZA
250 S. 5TH ST. BOISE, ID 83702
(208) 343-4635 FAX (208) 343-1858
http://www.cshqa.com

JOHN D. MAULIN, ARCHITECT
C.W. MOORE PLAZA
250 S. 5TH ST
BOISE, IDAHO
PHONE: 208-343-4635 FAX: 208-343-1858

THESE DRAWINGS AND SPECIFICATIONS, AS INSTRUMENTS OF SERVICE, ARE AND SHALL REMAIN THE PROPERTY OF THE ARCHITECT / ENGINEER WHETHER THE PROJECT FOR WHICH THEY ARE MADE IS EXECUTED OR NOT. THESE DRAWINGS AND SPECIFICATIONS SHALL NOT BE USED BY ANY PERSON OR ENTITY ON OTHER PROJECTS, FOR ADDITIONS TO THIS PROJECT, OR COMPLETION OF THIS PROJECT-WHEN PHASED-WITHOUT THE WRITTEN CONSENT OF CSHQA OR ITS AFFILIATES. Copyright©2013

STAMP

LICENSED ARCHITECT AR.1706 — JOHN D. MAULIN, STATE OF IDAHO — JULY 12, 2013

ORIGINAL DOCUMENT SIGNED BY ARCHITECT ON FILE WITH THE OWNER ORIGINAL SIGNED BY: JOHN D. MAULIN ORIGINAL DATE SIGNED: JULY 12, 2013

CAD FILE NAME: 531-320_A0.2.DWG

XREF FILE NAME: 531-320_30X42TLBK.DWG, 531-320_67A2.DWG, 531-320_67GRID.DWG

DRAWING TITLE: SECOND FLOOR DEMOLITION PLAN

PROJECT TITLE: BOISE VAMC BUILDING 67 EXPANSION

DATE: 07/12/2013

PROJECT NO.: 531-320

APPROVED: CHIEF OF FACILITY MANAGEMENT SERVICE

APPROVED: MEDICAL CENTER DIRECTOR

BUILDING NUMBER: 67 | CHECKED: JDM | DRAWN: TWM

LOCATION: VAMC BOISE, IDAHO

DRAWING NO.: A0.2

DWG 11 OF 191

DEPARTMENT OF VETERANS AFFAIRS

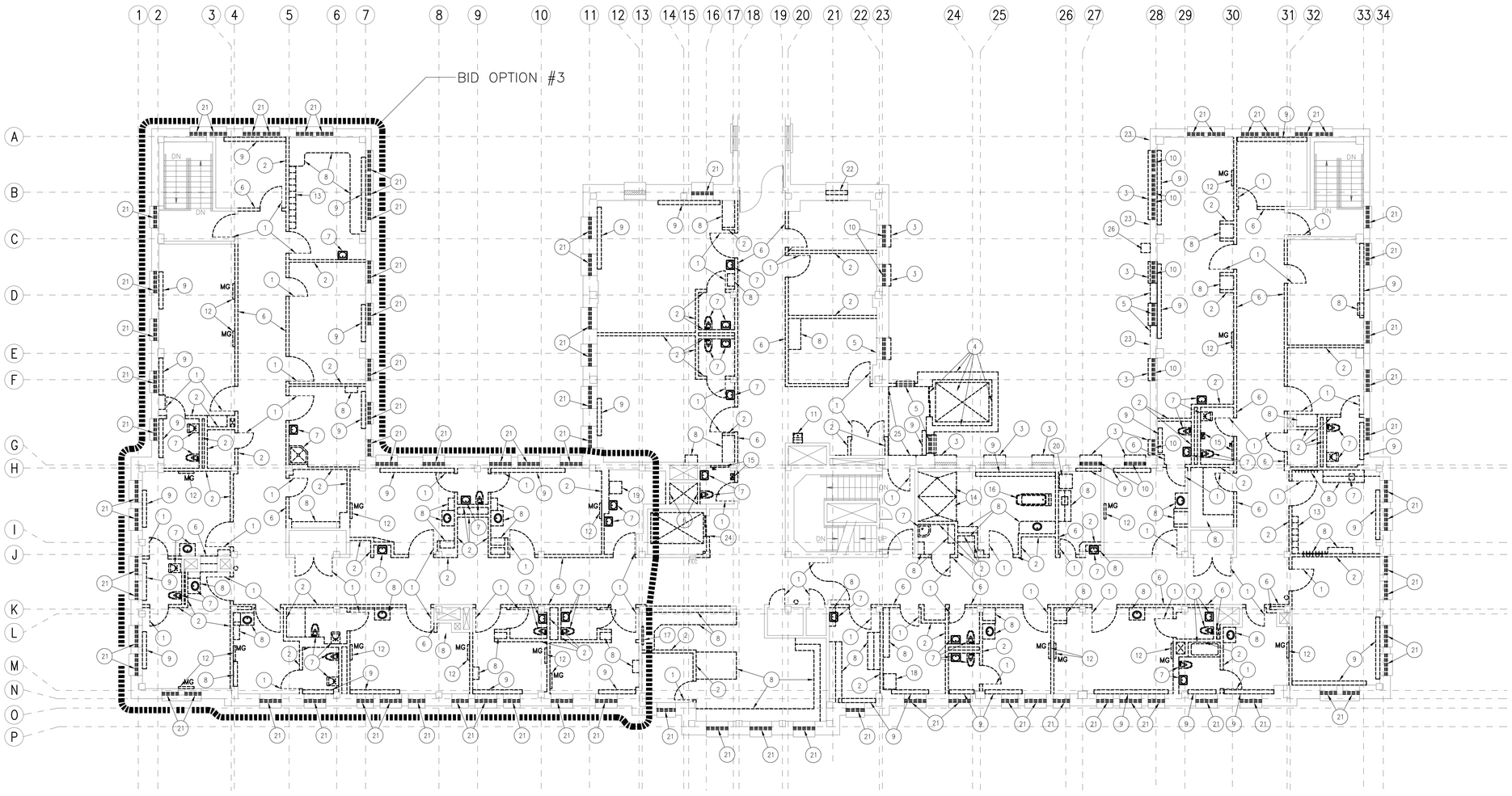

TRUE PLAN

1 THIRD FLOOR DEMOLITION PLAN

SCALE: 1/8" = 1'-0"

GENERAL NOTES:

A. THIS PLAN SHOWS GENERAL DEMOLITION WORK TO BE PERFORMED AND DOES NOT RELIEVE THE CONTRACTOR FROM OTHER DEMOLITION WORK REQUIRED TO PRODUCE THE MODIFICATIONS/ADDITIONS SHOWN ON THE REMAINING CONTRACT DOCUMENTS.

B. FOR DEMOLITION WORK ASSOCIATED WITH THE SITE, REFER TO THE CIVIL DEMOLITION PLAN.

C. ALL ITEMS INDICATED TO BE DEMOLISHED SHALL BE REMOVED FROM THE SITE AND LEGALLY DISPOSED OF BY THE CONTRACTOR.

D. DEMOLITION SHOWN WILL TAKE PLACE IN AN AREA WHERE SURROUNDING BUILDINGS REMAIN OCCUPIED BY HOSPITAL STAFF AND PATIENTS. DUST CONTROL AND NOISE ARE ISSUES OF MAJOR CONCERN IN BUILDING 67. THE CONTRACTOR IS REQUIRED TO MAINTAIN AN AIR-TIGHT DUST BARRIER WITHIN BUILDING 67 DURING THE DURATION OF DUST PRODUCING WORK. WORK THAT CREATES EXCESSIVE NOISE OR DUST MUST BE CAREFULLY COORDINATED AND SCHEDULED WITH THE HOSPITAL.

E. CONTRACTOR SHALL ERECT BARRICADES, SAFETY SIGNS, AND OTHER SIMILAR ITEMS AS REQUIRED FOR THE PROTECTION OF ALL PERSONNEL, HOSPITAL STAFF, PATIENTS, AND GENERAL PUBLIC DURING DEMOLITION AND REMOVAL OPERATIONS.

F. CONTRACTOR SHALL PROTECT SURROUNDING BUILDING COMPONENTS AND VEGETATION, NOT INDICATED TO BE DEMOLISHED, FROM DAMAGE DURING DEMOLITION AND REMOVAL OPERATIONS.

G. REMOVE PORTIONS OF CEILING AS NEEDED TO ACCOMMODATE ADJACENT WALL DEMOLITION AND NEW CONSTRUCTION. CW/ NEW PLANS, MECHANICAL, PLUMBING, AND ELECTRICAL DEMOLITION DRAWINGS FOR ADDITIONAL CEILING DEMOLITION REQUIREMENTS.

H. TOILET PAPER, SOAP, HAND SANITIZER AND PAPER TOWEL DISPENSERS, GRAB BARS AND MIRRORS TO BE REMOVED AND RETURNED TO OWNER STOCK. CW/ OWNER.

I. EXISTING FLOOR FINISHES IN AREA OF REMODEL TO BE REMOVED, PATCH AND REPAIR FLOORS AS REQUIRED TO RECEIVE NEW FLOOR FINISHES, CW/ ROOM FINISH SCHEDULES AND FLOOR FINISH PLANS.

J. EXISTING WALL COVERINGS IN AREA OF REMODEL TO BE REMOVED, PREPARE WALLS TO RECEIVE NEW FINISH, CW/ ROOM FINISH SCHEDULE.

K. CONTRACTOR IS RESPONSIBLE FOR ALL DEMOLITION AND HAZARDOUS MATERIAL REMOVAL, REFER TO "LEAD MANAGEMENT PLAN FINAL 31 OCT 11" FOR LOCATIONS OF LEAD BASED PAINTS. SPECIFICATIONS CALLS FOR "LEAD DEMOLITION AND STABILIZATION" VS. "LEAD ABATEMENT". STABLE AREAS OF LEAD-BASED PAINT ON SURFACES THAT ARE TO REMAIN AND ARE NOT INDICATED TO BE REMOVED ON THE DRAWINGS MAY REMAIN UNDISTURBED, IN AREAS WHERE LEAD-BASED PAINT IS CRACKING AND PEELING, STABILIZE AND ENCAPSULATE WITH "LEAD SAFE WORKING PRACTICES". RE: SPECIFICATION 02 83 33.13 FOR ADDITIONAL INFORMATION.

L. CONTRACTOR IS TO REMOVE ALL WALL MOUNTED SIGNAGE, BULLETIN BOARDS, CHART HOLDERS, ETC. PRIOR TO DEMOLITION UNLESS DIRECTED OTHERWISE. TURN ALL REQUESTED REMOVED ITEMS OVER TO THE VA. THE VA WILL BE RESPONSIBLE FOR REINSTALLATION OF THESE ITEMS.

M. CONTRACTOR RESPONSIBLE FOR ASBESTOS ABATEMENT, RE: SPECIFICATIONS 02 82 11, 02 82 13.13, AND 02 82 13.19, FOR LOCATIONS AND REQUIREMENTS.

N. CONTRACTOR RESPONSIBLE FOR FIRE STOPPING ALL PENETRATIONS THAT ARE ABANDONED OR PENETRATIONS THAT ARE CREATED BY REQUIRED DEMOLITION AT RATED ASSEMBLIES, IN ACCORDANCE WITH NFPA STANDARDS. RE: G1.3, CODE DATA FOR FIRE RESISTIVE RATINGS.

SHEET NOTES:

1. EXISTING DOOR TO BE DEMOLISHED.
2. EXISTING WALL TO BE DEMOLISHED.
3. EXISTING WINDOW SILL TO BE DEMOLISHED FLUSH WITH FACE OF BRICK WALL.
4. EXISTING ELEVATOR AND ELEVATOR SHAFT TO BE DEMOLISHED.
5. REMOVE WINDOW AND PORTION OF EXTERIOR WALL AS NEEDED FOR NEW CONSTRUCTION, RE: A1.3 AND A1.6.
6. PORTION OF EXISTING WALL TO BE REMOVED AS NEEDED FOR NEW CONSTRUCTION, RE: A1.3 AND A1.6.
7. EXISTING PLUMBING FIXTURE TO BE REMOVED, RE: PLUMBING DRAWINGS.
8. EXISTING MILLWORK TO BE REMOVED, PATCH WALL TO REMAIN.
9. EXISTING RADIATORS TO BE REMOVED, CW/ MECHANICAL DRAWINGS.
10. EXISTING WINDOW TO BE DEMOLISHED.
11. EXISTING DRINKING FOUNTAIN TO BE REMOVED.
12. EXISTING HEAD WALL TO BE REMOVED, CW/ PLUMBING DRAWINGS FOR MEDICAL GAS DEMOLITION.
13. EXISTING LOCKERS TO BE REMOVED.
14. EXISTING SHOWER STALL TO BE DEMOLISHED. CW/ PLUMBING DRAWINGS.
15. MISCELLANEOUS EQUIPMENT/FURNISHINGS TO BE REMOVED, TYPICAL. CW/ COTR.
16. EXISTING TUB TO BE RELOCATED. CW/ EQUIPMENT PLAN AND PLUMBING DRAWINGS.
17. BED BOARD MONITOR TO BE RELOCATED, CW/ EQUIPMENT PLAN.
18. EXISTING BLANKET WARMER TO BE RELOCATED, CW/ EQUIPMENT PLAN.
19. VERNACARE TO BE RELOCATED. CW/ EQUIPMENT PLAN AND PLUMBING DRAWINGS.
20. EXISTING ICE MACHINE TO BE RELOCATED. CW/ EQUIPMENT PLAN AND PLUMBING DRAWINGS.
21. REMOVE WINDOW AND PREP OPENING TO RECEIVE NEW WINDOW.
22. REMOVE EXISTING WALL INFILL FROM WINDOW OPENING AND PREP OPENING TO RECEIVE NEW WINDOW.
23. EXISTING BRICK BAND TO BE DEMOLISHED FLUSH WITH FACE OF BRICK WALL.
24. REMOVE EXISTING ELEVATOR; MODIFY EXISTING HOISTWAY AND HOISTWAY OPENING AS NEEDED FOR NEW ELEVATOR, RE: ELEVATOR SPECIFICATION AND STRUCTURAL DRAWINGS.
25. EXISTING FLOOR SLAB TO BE DEMOLISHED.
26. EXISTING ABANDONED VENTILATION STACK TO BE REMOVED FROM BASEMENT TO ROOF.

LEGEND:

EXISTING CONSTRUCTION TO REMAIN.

EXISTING CONSTRUCTION TO BE REMOVED AND LEGALLY DISPOSED BY THE CONTRACTOR, UNLESS OTHERWISE NOTED.

REVISIONS	DATE

CSHQA

C.W. MOORE PLAZA
250 S. 5TH ST. BOISE, ID 83702
(208) 343-4635 FAX (208) 343-1858
http://www.cshqa.com

JOHN D. MAULIN, ARCHITECT
C.W. MOORE PLAZA
250 S. 5TH ST
BOISE, IDAHO
PHONE: 208-343-4635 FAX: 208-343-1858

THESE DRAWINGS AND SPECIFICATIONS, AS INSTRUMENTS OF SERVICE, ARE AND SHALL REMAIN THE PROPERTY OF THE ARCHITECT / ENGINEER WHETHER THE PROJECT FOR WHICH THEY ARE MADE IS EXECUTED OR NOT. THESE DRAWINGS AND SPECIFICATIONS SHALL NOT BE USED BY ANY PERSON OR ENTITY ON OTHER PROJECTS, FOR ADDITIONS TO THIS PROJECT, OR COMPLETION OF THIS PROJECT-WHEN PHASED-WITHOUT THE WRITTEN CONSENT OF CSHQA OR ITS AFFILIATES. Copyright#2013

STAMP
LICENSED ARCHITECT AR 1106
JOHN D. MAULIN STATE OF IDAHO
JULY 12, 2013

ORIGINAL DOCUMENT SIGNED BY ARCHITECT ON FILE WITH THE OWNER ORIGINAL SIGNED BY: JOHN D. MAULIN ORIGINAL DATE SIGNED: JULY 12, 2013

CAD FILE NAME:
531-320_A0.3.DWG

XREF FILE NAME:
531-320_30X42TLBK.DWG
531-320_67A3.DWG
531-320_67GRID.DWG

DRAWING TITLE
THIRD FLOOR DEMOLITION PLAN

APPROVED: CHIEF OF FACILITY MANAGEMENT SERVICE

APPROVED: MEDICAL CENTER DIRECTOR

PROJECT TITLE
BOISE VAMC
BUILDING 67 EXPANSION

BUILDING NUMBER	CHECKED	DRAWN
67	JDM	TWM

LOCATION
VAMC BOISE, IDAHO

DATE 07/12/2013

PROJECT NO. 531-320

DRAWING NO. A0.3

DEPARTMENT OF VETERANS AFFAIRS

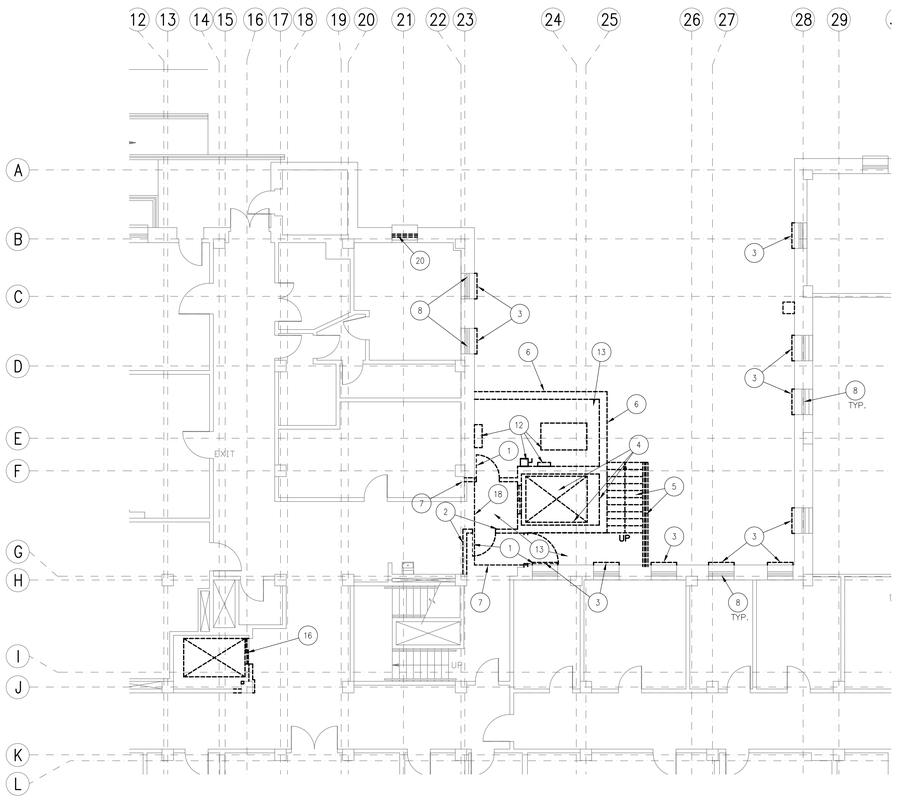

TRUE PLAN

1 PARTIAL GROUND FLOOR DEMOLITION PLAN

SCALE: 1/8" = 1'-0"

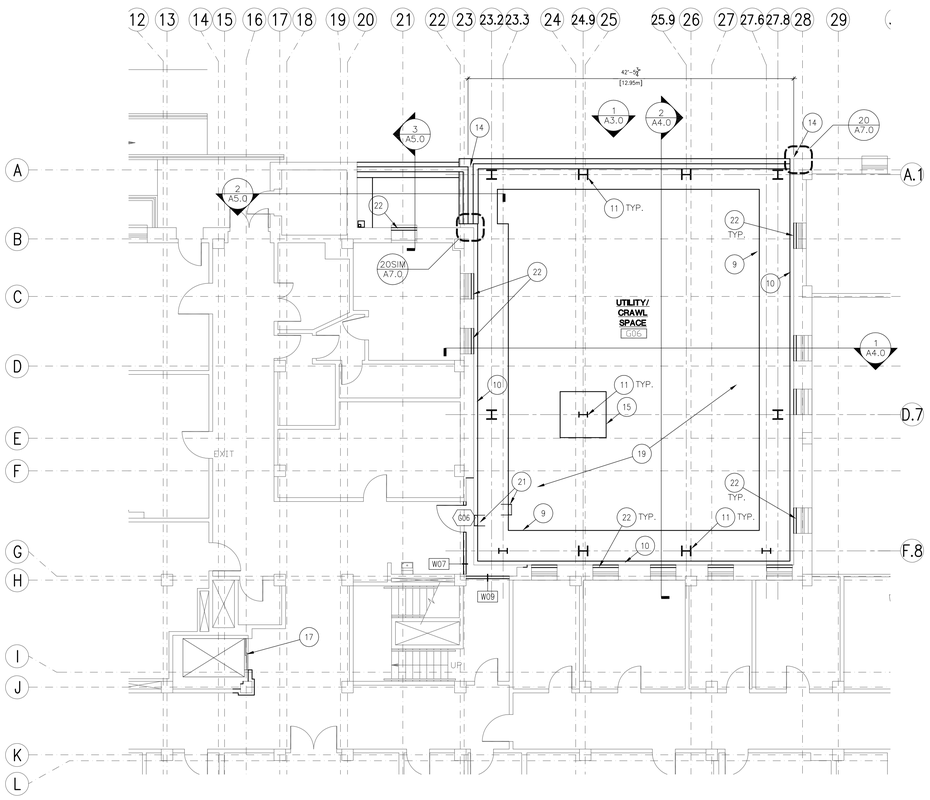

TRUE PLAN

2 PARTIAL GROUND FLOOR PLAN

SCALE: 1/8" = 1'-0"

GENERAL NOTES:

A. THIS PLAN SHOWS GENERAL DEMOLITION WORK TO BE PERFORMED AND DOES NOT RELIEVE THE CONTRACTOR FROM OTHER DEMOLITION WORK REQUIRED TO PRODUCE THE MODIFICATIONS/ADDITIONS SHOWN ON THE REMAINING CONTRACT DOCUMENTS.

B. FOR DEMOLITION WORK ASSOCIATED WITH THE SITE, REFER TO THE CIVIL DEMOLITION PLAN.

C. ALL ITEMS INDICATED TO BE DEMOLISHED SHALL BE REMOVED FROM THE SITE AND LEGALLY DISPOSED OF BY THE CONTRACTOR.

D. DEMOLITION SHOWN WILL TAKE PLACE IN AN AREA WHERE SURROUNDING BUILDINGS REMAIN OCCUPIED BY HOSPITAL STAFF AND PATIENTS. DUST CONTROL AND NOISE ARE ISSUES OF MAJOR CONCERN IN BUILDINGS 67. THE CONTRACTOR IS REQUIRED TO MAINTAIN AN AIR–TIGHT DUST BARRIER WITHIN BUILDING 67 DURING THE DURATION OF DUST PRODUCING WORK. WORK THAT CREATES EXCESSIVE NOISE OR DUST MUST BE CAREFULLY COORDINATED AND SCHEDULED WITH THE HOSPITAL.

E. CONTRACTOR SHALL ERECT BARRICADES, SAFETY SIGNS, AND OTHER SIMILAR ITEMS AS REQUIRED FOR THE PROTECTION OF ALL PERSONNEL, HOSPITAL STAFF, PATIENTS, AND GENERAL PUBLIC DURING DEMOLITION AND REMOVAL OPERATIONS.

F. CONTRACTOR SHALL PROTECT SURROUNDING BUILDING COMPONENTS AND VEGETATION, NOT INDICATED TO BE DEMOLISHED, FROM DAMAGE DURING DEMOLITION AND REMOVAL OPERATIONS.

G. REMOVE PORTIONS OF CEILING AS NEEDED TO ACCOMMODATE ADJACENT WALL DEMOLITION AND NEW CONSTRUCTION. CW/ NEW PLANS, MECHANICAL, PLUMBING, AND ELECTRICAL DEMOLITION DRAWINGS FOR ADDITIONAL CEILING DEMOLITION REQUIREMENTS.

H. CONTRACTOR IS RESPONSIBLE FOR ALL DEMOLITION AND HAZARDOUS MATERIAL REMOVAL, REFER TO "LEAD MANAGEMENT PLAN FINAL 31 OCT 11" FOR LOCATIONS OF LEAD BASED PAINTS. SPECIFICATIONS CALLS FOR "LEAD DEMOLITION AND STABILIZATION" VS. "LEAD ABATEMENT". STABLE AREAS OF LEAD–BASED PAINT ON SURFACES THAT ARE TO REMAIN AND ARE NOT INDICATED TO BE REMOVED ON THE DRAWINGS MAY REMAIN UNDISTURBED, IN AREAS WHERE LEAD–BASED PAINT IS CRACKING AND PEELING, STABILIZE AND ENCAPSULATE WITH "LEAD SAFE WORKING PRACTICES". RE: SPECIFICATIONS 02 83 33.13 FOR ADDITIONAL INFORMATION.

I. CONTRACTOR IS TO REMOVE ALL WALL MOUNTED SIGNAGE, BULLETIN BOARDS, CHART HOLDERS, ETC. PRIOR TO DEMOLITION UNLESS DIRECTED OTHERWISE. TURN ALL REQUESTED REMOVED ITEMS OVER TO THE VA. THE VA WILL BE RESPONSIBLE FOR REINSTALLATION OF THESE ITEMS.

J. REFERENCE SHEET A1.4 FOR WALL TYPES.

K. CONTRACTOR RESPONSIBLE FOR ASBESTOS ABATEMENT, RE: SPECIFICATION 02 82 11, 02 82 13.13, AND 02 82 13.19, FOR LOCATIONS AND REQUIREMENTS.

L. CONTRACTOR RESPONSIBLE FOR FIRE STOPPING ALL PENETRATIONS THAT ARE ABANDONED OR PENETRATIONS THAT ARE CREATED BY REQUIRED DEMOLITION AT RATED ASSEMBLIES, IN ACCORDANCE WITH NFPA STANDARDS. RE: G1.1 CODE DATA, FOR FIRE RESISTIVE RATINGS.

SHEET NOTES:

1. EXISTING DOOR TO BE DEMOLISHED.
2. EXISTING WALL TO BE DEMOLISHED.
3. EXISTING WINDOW SILL TO BE DEMOLISHED FLUSH WITH FACE OF BRICK WALL.
4. EXISTING ELEVATOR AND ELEVATOR SHAFT AND ASSOCIATED FOUNDATION TO BE DEMOLISHED. THIS IS TO OCCUR AFTER OTHER ELEVATOR MODERNIZATION.
5. EXISTING STAIRS AND RAILING TO BE DEMOLISHED.
6. EXTERIOR WALL AND ASSOCIATED FOUNDATION TO BE DEMOLISHED.
7. PORTION OF EXISTING WALL TO BE REMOVED AS NEEDED FOR NEW CONSTRUCTION, RE: A0.4–2.
8. EXISTING WINDOW TO REMAIN.
9. CONCRETE GRADE BEAM, CW/ STRUCTURAL DRAWINGS.
10. BUILDING SEPARATION JOINT, CW/ STRUCTURAL DRAWINGS.
11. NEW STEEL COLUMN, CW/ STRUCTURAL DRAWINGS.
12. REMOVE ALL EQUIPMENT IN ELEVATOR MACHINE ROOM.
13. EXISTING FLOOR SLAB TO BE DEMOLISHED.
14. PROVIDE 6" [.152m] WIDE SEISMIC JOINT ABOVE GRADE AT BRICK VENEER. RE: EXTERIOR ELEVATIONS.
15. CONCRETE FOOTING, CW/ STRUCTURAL DRAWINGS.
16. REMOVE EXISTING ELEVATOR; MODIFY EXISTING HOISTWAY AND HOISTWAY OPENING AS NEEDED FOR NEW ELEVATOR, RE: ELEVATOR SPECIFICATION AND STRUCTURAL DRAWINGS. ELEVATOR MODERNIZATION TO BE COMPLETED PRIOR TO OTHER ELEVATOR DEMOLITION.
17. NEW ELEVATOR, ELEVATOR ENTRANCE, AND CONTROLS. PATCH EXISTING FINISHES AS NEEDED TO REMOVE EXISTING, AND INSTALL NEW EQUIPMENT, TYPICAL ALL LEVELS. ELEVATOR MODERNIZATION TO BE COMPLETED PRIOR TO OTHER ELEVATOR DEMOLITION.
18. EXISTING FLOOR SLAB TO BE DEMOLISHED.
19. 3"[75mm] CONCRETE SLAB OVER CONTINUOUS CLASS I VAPOR RETARDER, TO EXTEND 6"[150mm] MIN. UP GRADE BEAMS AND FOOTINGS AND BE ATTACHED, AND TO OVERLAP 6"[150mm] MIN. AND BE SEALED OR TAPED.
20. EXISTING WINDOW TO BE DEMOLISHED.
21. STEEL LADDER SECURED TO GRADE BEAM FOR CRAWL SPACE ACCESS, RE: A7.5–9 & 12.
22. INFILL MASONRY OPENING WITH METAL FRAMING, (1) LAYER 5/8" [0.016m] TYPE "X" GYPSUM. PROVIDE FIRE SEALANT AT PERIMETER.

LEGEND:

EXISTING CONSTRUCTION TO REMAIN.

EXISTING CONSTRUCTION TO BE REMOVED AND LEGALLY DISPOSED BY THE CONTRACTOR, UNLESS OTHERWISE NOTED.

NEW CONSTRUCTION

REVISIONS	DATE

CSHQA

C.W. MOORE PLAZA
250 S. 5TH ST. BOISE, ID 83702
(208) 343-4635 FAX (208) 343-1858
http://www.cshqa.com

JOHN D. MAULIN, ARCHITECT
C.W. MOORE PLAZA
250 S. 5TH ST
BOISE, IDAHO
PHONE: 208-343-4635 FAX: 208-343-1858

THESE DRAWINGS AND SPECIFICATIONS, AS INSTRUMENTS OF SERVICE, ARE AND SHALL REMAIN THE PROPERTY OF THE ARCHITECT / ENGINEER WHETHER THE PROJECT FOR WHICH THEY ARE MADE IS EXECUTED OR NOT. THESE DRAWINGS AND SPECIFICATIONS SHALL NOT BE USED BY ANY PERSON OR ENTITY ON OTHER PROJECTS, FOR ADDITIONS TO THIS PROJECT, OR COMPLETION OF THIS PROJECT–WHEN PHASED–WITHOUT THE WRITTEN CONSENT OF CSHQA OR ITS AFFILIATES. Copyright©2013

STAMP
LICENSED ARCHITECT AR 1106
JOHN D. MAULIN STATE OF IDAHO
JULY 12, 2013

ORIGINAL DOCUMENT SIGNED BY ARCHITECT ON FILE WITH THE OWNER
ORIGINAL SIGNED BY: JOHN D. MAULIN
ORIGINAL DATE SIGNED: JULY 12, 2013

CAD FILE NAME: 531–320_A0.4.DWG
XREF FILE NAME: 531–320_30X42TLBK.DWG 531–320_67A0.DWG 531–320_67GRID.DWG

DRAWING TITLE: GROUND FLOOR DEMOLITION AND FLOOR PLAN

PROJECT TITLE: BOISE VAMC BUILDING 67 EXPANSION

DATE: 07/12/2013
PROJECT NO: 531–320

APPROVED: CHIEF OF FACILITY MANAGEMENT SERVICE
APPROVED: MEDICAL CENTER DIRECTOR

BUILDING NUMBER: 67
CHECKED: JDM
DRAWN: TWM
LOCATION: VAMC BOISE, IDAHO

DRAWING NO: A0.4

DEPARTMENT OF VETERANS AFFAIRS

TRUE PLAN

1 SECOND FLOOR REFLECTED CEILING DEMOLITION PLAN

SCALE: 1/8" = 1'-0"

GENERAL NOTES:

A. THIS PLAN SHOWS GENERAL DEMOLITION WORK TO BE PERFORMED AND DOES NOT RELIEVE THE CONTRACTOR FROM OTHER DEMOLITION WORK REQUIRED TO PRODUCE THE MODIFICATIONS/ADDITIONS SHOWN ON THE REMAINING CONTRACT DOCUMENTS.

B. FOR DEMOLITION WORK ASSOCIATED WITH THE SITE, REFER TO THE CIVIL DEMOLITION PLAN.

C. ALL ITEMS INDICATED TO BE DEMOLISHED SHALL BE REMOVED FROM THE SITE AND LEGALLY DISPOSED OF BY THE CONTRACTOR.

D. DEMOLITION SHOWN WILL TAKE PLACE IN AN AREA WHERE SURROUNDING BUILDINGS REMAIN OCCUPIED BY HOSPITAL STAFF AND PATIENTS. DUST CONTROL AND NOISE ARE ISSUES OF MAJOR CONCERN IN BUILDING 67. THE CONTRACTOR IS REQUIRED TO MAINTAIN AN AIR-TIGHT DUST BARRIER WITHIN BUILDING 67 DURING THE DURATION OF DUST PRODUCING WORK. WORK THAT CREATES EXCESSIVE NOISE OR DUST MUST BE CAREFULLY COORDINATED AND SCHEDULED WITH THE HOSPITAL.

E. CONTRACTOR SHALL ERECT BARRICADES, SAFETY SIGNS, AND OTHER SIMILAR ITEMS AS REQUIRED FOR THE PROTECTION OF ALL PERSONNEL, HOSPITAL STAFF, PATIENTS, AND GENERAL PUBLIC DURING DEMOLITION AND REMOVAL OPERATIONS.

F. CONTRACTOR SHALL PROTECT SURROUNDING BUILDING COMPONENTS AND VEGETATION, NOT INDICATED TO BE DEMOLISHED, FROM DAMAGE DURING DEMOLITION AND REMOVAL OPERATIONS.

G. REMOVE PORTIONS OF CEILING AS NEEDED TO ACCOMMODATE ADJACENT WALL DEMOLITION AND NEW CONSTRUCTION. CW/ NEW PLANS, MECHANICAL, PLUMBING, AND ELECTRICAL DEMOLITION DRAWINGS FOR ADDITIONAL CEILING DEMOLITION REQUIREMENTS.

H. ALL EXISTING CEILING MOUNTED ELECTRICAL AND MECHANICAL DEVICES SHALL BE REMOVED FROM CEILINGS INDICATED TO BE REMOVED. COORDINATE WITH ELECTRICAL AND MECHANICAL DRAWINGS.

I. REFER TO SHEET A0.2 FOR ADDITIONAL DEMOLITION REQUIREMENTS NOT INDICATED ON THIS PLAN.

J. CONTRACTOR IS RESPONSIBLE FOR ALL DEMOLITION AND HAZARDOUS MATERIAL REMOVAL. REFER TO "LEAD MANAGEMENT PLAN FINAL 31 OCT 11" FOR LOCATIONS OF LEAD BASED PAINTS. SPECIFICATIONS CALLS FOR "LEAD DEMOLITION AND STABILIZATION" VS. "LEAD ABATEMENT". STABLE AREAS OF LEAD-BASED PAINT ON SURFACES THAT ARE TO REMAIN AND ARE NOT INDICATED TO BE REMOVED ON THE DRAWINGS MAY REMAIN UNDISTURBED, IN AREAS WHERE LEAD-BASED PAINT IS CRACKING AND PEELING, STABILIZE AND ENCAPSULATE WITH "LEAD SAFE WORKING PRACTICES". RE: SPECIFICATIONS 02 83 33.13 FOR ADDITIONAL INFORMATION.

K. CONTRACTOR RESPONSIBLE FOR ASBESTOS ABATEMENT, RE: SPECIFICATIONS 02 82 11, 02 82 13.13, AND 02 82 13.19 FOR LOCATIONS AND REQUIREMENTS.

L. CONTRACTOR RESPONSIBLE FOR FIRE STOPPING ALL PENETRATIONS THAT ARE ABANDONED OR CREATED BY REQUIRED DEMOLITION AT RATED ASSEMBLIES, IN ACCORDANCE WITH NFPA STANDARDS. RE: G1.2 CODE DATA FOR FIRE RESISTIVE RATINGS.

SHEET NOTES:

1. EXISTING SUSPENDED ACOUSTICAL CEILING SYSTEM TO BE DEMOLISHED, INCLUDING ALL SUSPENSION WIRES. CEILING TILES ARE CURRENTLY SCREWED TO GRID ON THIS FLOOR.
2. EXISTING GYPSUM BOARD OR PLASTER CEILING OR SOFFIT TO BE DEMOLISHED, INCLUDING ALL SUPPORT FRAMING.
3. EXISTING CEILING SYSTEM TO REMAIN AND BE PROTECTED.

LEGEND:

EXISTING CONSTRUCTION TO REMAIN.

EXISTING CONSTRUCTION TO BE REMOVED AND LEGALLY DISPOSED BY THE CONTRACTOR, UNLESS OTHERWISE NOTED.

REVISIONS	DATE

CSHQA

C.W. MOORE PLAZA
250 S. 5TH ST. BOISE, ID 83702
(208) 343-4635 FAX (208) 343-1858
http://www.cshqa.com

JOHN D. MAULIN, ARCHITECT
C.W. MOORE PLAZA
250 S. 5TH ST
BOISE, IDAHO
PHONE: 208-343-4635 FAX: 208-343-1858

THESE DRAWINGS AND SPECIFICATIONS, AS INSTRUMENTS OF SERVICE, ARE AND SHALL REMAIN THE PROPERTY OF THE ARCHITECT / ENGINEER WHETHER THE PROJECT FOR WHICH THEY ARE MADE IS EXECUTED OR NOT. THESE DRAWINGS AND SPECIFICATIONS SHALL NOT BE USED BY ANY PERSON OR ENTITY ON OTHER PROJECTS, FOR ADDITIONS TO THIS PROJECT, OR COMPLETION OF THIS PROJECT WHEN PHASED WITHOUT THE WRITTEN CONSENT OF CSHQA OR ITS AFFILIATES. Copyright©2013

STAMP
LICENSED ARCHITECT AR.1706
JOHN D. MAULIN STATE OF IDAHO
JULY 12, 2013

ORIGINAL DOCUMENT SIGNED BY ARCHITECT ON FILE WITH THE OWNER
ORIGINAL SIGNED BY: JOHN D. MAULIN
ORIGINAL DATE SIGNED: JULY 12, 2013

CAD FILE NAME: 531-320_A0.5.DWG
XREF FILE NAME: 531-320_30X42TLBK.DWG
531-320_67A2.DWG
531-320_67GRID.DWG

DRAWING TITLE: SECOND FLOOR REFLECTED CEILING DEMOLITION PLAN

PROJECT TITLE: BOISE VAMC BUILDING 67 EXPANSION

DATE: 07/12/2013
PROJECT NO.: 531-320

APPROVED: CHIEF OF FACILITY MANAGEMENT SERVICE
APPROVED: MEDICAL CENTER DIRECTOR

BUILDING NUMBER: 67
CHECKED: JDM
DRAWN: TWM
LOCATION: VAMC BOISE, IDAHO

DRAWING NO.: A0.5
DWG 14 OF 191

DEPARTMENT OF VETERANS AFFAIRS

THIRD FLOOR REFLECTED
1 CEILING DEMOLITION PLAN

TRUE PLAN

SCALE: 1/8" = 1'-0"

GENERAL NOTES:

A. THIS PLAN SHOWS GENERAL DEMOLITION WORK TO BE PERFORMED AND DOES NOT RELIEVE THE CONTRACTOR FROM OTHER DEMOLITION WORK REQUIRED TO PRODUCE THE MODIFICATIONS/ADDITIONS SHOWN ON THE REMAINING CONTRACT DOCUMENTS.

B. FOR DEMOLITION WORK ASSOCIATED WITH THE SITE, REFER TO THE CIVIL DEMOLITION PLAN.

C. ALL ITEMS INDICATED TO BE DEMOLISHED SHALL BE REMOVED FROM THE SITE AND LEGALLY DISPOSED OF BY THE CONTRACTOR.

D. DEMOLITION SHOWN WILL TAKE PLACE IN AN AREA WHERE SURROUNDING BUILDINGS REMAIN OCCUPIED BY HOSPITAL STAFF AND PATIENTS. DUST CONTROL AND NOISE ARE ISSUES OF MAJOR CONCERN IN BUILDING 67. THE CONTRACTOR IS REQUIRED TO MAINTAIN AN AIR-TIGHT DUST BARRIER WITHIN BUILDING 67 DURING THE DURATION OF DUST PRODUCING WORK. WORK THAT CREATES EXCESSIVE NOISE OR DUST MUST BE CAREFULLY COORDINATED AND SCHEDULED WITH THE HOSPITAL.

E. CONTRACTOR SHALL ERECT BARRICADES, SAFETY SIGNS, AND OTHER SIMILAR ITEMS AS REQUIRED FOR THE PROTECTION OF ALL PERSONNEL, HOSPITAL STAFF, PATIENTS, AND GENERAL PUBLIC DURING DEMOLITION AND REMOVAL OPERATIONS.

F. CONTRACTOR SHALL PROTECT SURROUNDING BUILDING COMPONENTS AND VEGETATION, NOT INDICATED TO BE DEMOLISHED, FROM DAMAGE DURING DEMOLITION AND REMOVAL OPERATIONS.

G. REMOVE PORTIONS OF CEILING AS NEEDED TO ACCOMMODATE ADJACENT WALL DEMOLITION AND NEW CONSTRUCTION. CW/ NEW PLANS, MECHANICAL, PLUMBING, AND ELECTRICAL DEMOLITION DRAWINGS FOR ADDITIONAL CEILING DEMOLITION REQUIREMENTS.

H. ALL EXISTING CEILING MOUNTED ELECTRICAL AND MECHANICAL DEVICES SHALL BE REMOVED FROM CEILINGS INDICATED TO BE REMOVED. COORDINATE WITH ELECTRICAL AND MECHANICAL DRAWINGS.

I. REFER TO SHEET A0.2 FOR ADDITIONAL DEMOLITION REQUIREMENTS NOT INDICATED ON THIS PLAN.

J. CONTRACTOR IS RESPONSIBLE FOR ALL DEMOLITION AND HAZARDOUS MATERIAL REMOVAL, REFER TO "LEAD MANAGEMENT PLAN FINAL 31 OCT 11" FOR LOCATIONS OF LEAD BASED PAINTS. SPECIFICATIONS CALLS FOR "LEAD DEMOLITION AND STABILIZATION" VS. "LEAD ABATEMENT". STABLE AREAS OF LEAD-BASED PAINT ON SURFACES THAT ARE TO REMAIN AND ARE NOT INDICATED TO BE REMOVED ON THE DRAWINGS MAY REMAIN UNDISTURBED, IN AREAS WHERE LEAD-BASED PAINT IS CRACKING AND PEELING, STABILIZE AND ENCAPSULATE WITH "LEAD SAFE WORKING PRACTICES". RE: SPECIFICATION 02 83 33.13 FOR ADDITIONAL INFORMATION.

K. CONTRACTOR RESPONSIBLE FOR ASBESTOS ABATEMENT, RE:SPECIFICATIONS 02 82 11, 02 82 13.13, AND 02 82 13.19 FOR LOCATIONS AND REQUIREMENTS.

L. CONTRACTOR RESPONSIBLE FOR FIRE STOPPING ALL PENETRATIONS THAT ARE ABANDONED OR CREATED BY REQUIRED DEMOLITION AT RATED ASSEMBLIES, IN ACCORDANCE WITH NFPA STANDARDS. RE: G1.3 CODE DATA, FOR FIRE RESISTIVE RATINGS.

SHEET NOTES:

1. EXISTING SUSPENDED ACOUSTICAL CEILING SYSTEM TO BE DEMOLISHED, INCLUDING ALL SUSPENSION WIRES.
2. EXISTING GYPSUM BOARD OR PLASTER CEILING OR SOFFIT TO BE DEMOLISHED, INCLUDING ALL SUPPORT FRAMING.
3. EXISTING CEILING MOUNTED TRACK TO BE SALVAGED TO OWNERS STOCK, CW/ OWNER.
4. EXISTING CEILING SYSTEM TO REMAIN AND BE PROTECTED.

LEGEND:

EXISTING CONSTRUCTION TO REMAIN.

EXISTING CONSTRUCTION TO BE REMOVED AND LEGALLY DISPOSED BY THE CONTRACTOR, UNLESS OTHERWISE NOTED.

REVISIONS	DATE

CSHQA

C.W. MOORE PLAZA
250 S. 5TH ST. BOISE, ID 83702
(208) 343-4635 FAX (208) 343-1858
http://www.cshqa.com

JOHN D. MAULIN, ARCHITECT
C.W. MOORE PLAZA
250 S. 5TH ST
BOISE, IDAHO
PHONE: 208-343-4635 FAX: 208-343-1858

THESE DRAWINGS AND SPECIFICATIONS, AS INSTRUMENTS OF SERVICE, ARE AND SHALL REMAIN THE PROPERTY OF THE ARCHITECT / ENGINEER WHETHER THE PROJECT FOR WHICH THEY ARE MADE IS EXECUTED OR NOT. THESE DRAWINGS AND SPECIFICATIONS SHALL NOT BE USED BY ANY PERSON OR ENTITY ON OTHER PROJECTS, FOR ADDITIONS TO THIS PROJECT, OR COMPLETION OF THIS PROJECT-WHEN PHASED-WITHOUT THE WRITTEN CONSENT OF CSHQA OR ITS AFFILIATES. Copyright©2013

STAMP
LICENSED ARCHITECT
AR 1706
JOHN D. MAULIN
STATE OF IDAHO
JULY 12, 2013

ORIGINAL DOCUMENT SIGNED BY ARCHITECT ON FILE WITH THE OWNER
ORIGINAL SIGNED BY: JOHN D. MAULIN
ORIGINAL DATE SIGNED: JULY 12, 2013

CAD FILE NAME:
531-320_A0.6.DWG

XREF FILE NAME:
531-320_30X42TLBK.DWG
531-320_67A3.DWG
531-320_67GRID.DWG

DRAWING TITLE
THIRD FLOOR REFLECTED CEILING DEMOLITION PLAN

APPROVED: CHIEF OF FACILITY MANAGEMENT SERVICE

APPROVED: MEDICAL CENTER DIRECTOR

PROJECT TITLE
BOISE VAMC
BUILDING 67 EXPANSION

BUILDING NUMBER	CHECKED	DRAWN
67	JDM	TWM

LOCATION
VAMC BOISE, IDAHO

DATE 07/12/2013
PROJECT NO. 531-320
DRAWING NO. A0.6

DEPARTMENT OF VETERANS AFFAIRS

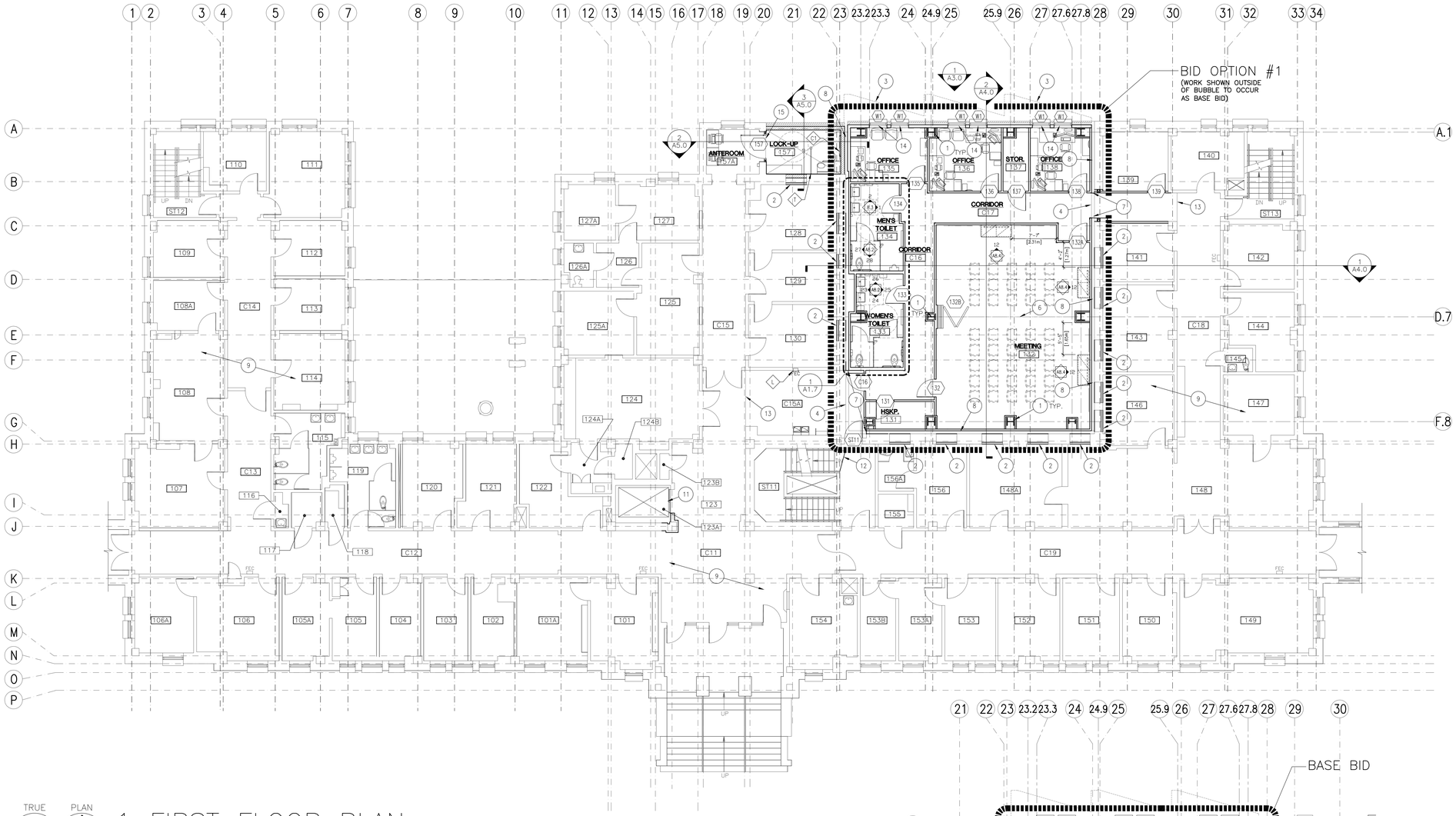

TRUE PLAN

1 FIRST FLOOR PLAN

SCALE: 1/8" = 1'-0"

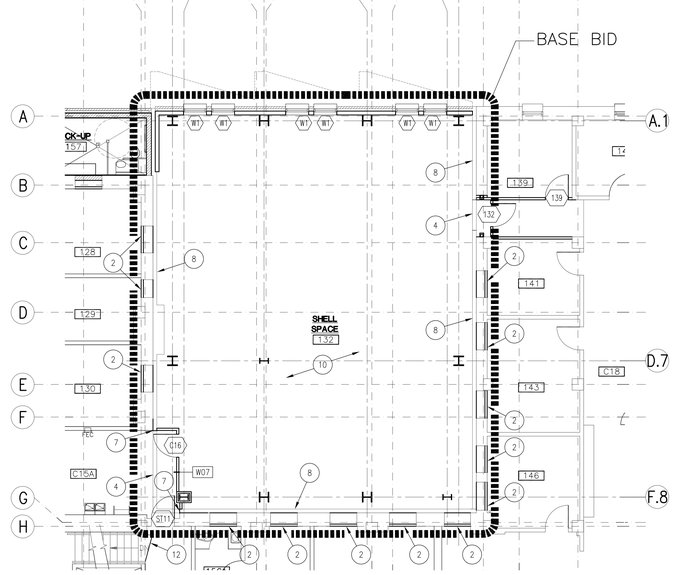

TRUE PLAN

2 FIRST FLOOR PARTIAL PLAN–BASE BID

SCALE: 1/8" = 1'-0"

SEE A1.1-1 FOR ADDITIONAL BASE BID WORK

GENERAL NOTES:

A. RE: A1.4 FOR WALL TYPES AND DIMENSION PLAN.

B. RE: A10.1 FOR FURNITURE AND EQUIPMENT PLAN.

C. RE: A6.3 AND A6.4 FOR DOOR SCHEDULE AND WINDOW TYPES.

D. RE: A6.1 FOR ROOM FINISH SCHEDULE.

E. CONTRACTOR SHALL PROVIDE BLOCKING OR BACKING FOR ALL WALL-MOUNTED AND RECESSED ACCESSORIES AND EQUIPMENT. ASSURE THAT ALL REQUIRED BACKING IS INSTALLED IN WALLS PRIOR TO INSTALLING GYPSUM WALL BOARD. THIS INCLUDES BACKING FOR WALL-MOUNTED DOORSTOPS.

F. PROVIDE MOISTURE RESISTANT GYPSUM WALLBOARD AT WALLS IN ROOMS EXPOSED TO MOISTURE, INCLUDING BUT NOT LIMITED TO RESTROOMS, PLUMBING WALLS WITH SINKS, HOUSEKEEPING, LAUNDRY, SOILED, BATHROOMS AND SIMILAR LOCATIONS. PROVIDE CEMENT BOARD BEHIND TILE FINISHES AND AT SHOWERS.

G. PROVIDE 'J' TRIM AT ALL GYPSUM BOARD TRANSITIONS TO DISSIMILAR MATERIALS.

H. RE: A8.1-1 FOR ACCESSORY MOUNTING HEIGHTS.

I. RE: A9.1 FOR REFLECTED CEILING PLAN.

J. EXTERIOR FINISH INFORMATION IS NOT INDICATED NOR DIMENSIONED ON FLOOR PLAN. REFER TO DIMENSION PLAN, EXTERIOR ELEVATIONS, AND BUILDING SECTIONS FOR ADDITIONAL INFORMATION.

K. THE HINGE SIDE OF ALL DOOR FRAMES SHALL BE MOUNTED 4" MIN. [0.10m] FROM ADJACENT PERPENDICULAR WALL U.N.O.

L. COORDINATE WITH CIVIL AND PLUMBING DRAWINGS FOR BELOW GRADE ROOF DRAIN PIPING.

SHEET NOTES:

1. NEW STEEL COLUMN, RE: DIMENSION PLAN AND CW/ STRUCTURAL DRAWINGS.
2. INFILL EXISTING WINDOW OPENING W/ 4" [0.10m] METAL FRAMING AND (1) LAYER 5/8"[0.02m] GYP. NEW FINISH FACE OF WALL TO ALIGN FLUSH W/ ADJACENT FINISH FACE OF WALL, PATCH/ PAINT ENTIRE WALL TO MATCH. IN OCCUPIED SPACES PROTECT ITEMS INSIDE, COORDINATE ACCESS WITH COTR.
3. DASHED LINE INDICATES OVERHANG OF FLOOR ABOVE.
4. SEISMIC FLOOR JOINT COVER, RE: A7.3-16.
5. NO NOTE PROVIDED.
6. FOLDING PANEL PARTITION TRACK ABOVE.
7. SEISMIC WALL JOINT COVER, RE: A7.1-1.
8. CONTINUOUS FLEXIBLE FIRE STOPPING AT FLOOR SEISMIC JOINT. NO COVER REQUIRED, RE: A7.3-15 SIM.
9. EXISTING CONSTRUCTION TO REMAIN AND BE PROTECTED.
10. SHELL SPACE: NO FLOOR, WALL, OR CEILING FINISHES UNDER BASE BID.
11. NEW ELEVATOR, ELEVATOR ENTRANCE, AND CONTROLS. PATCH EXISTING FINISHES AS NEEDED TO REMOVE EXISTING, AND INSTALL NEW EQUIPMENT, TYPICAL ALL LEVELS.
12. INSTALL GATE AT TOP OF STAIRS TO GROUND FLOOR. RE: A7.5-8. GATE MUST BE INSTALLED PRIOR TO BLOCKING GROUND FLOOR EXIT.
13. NEW CARPET TO EXISTING VCT FLOORING TRANSITION; FINISHED FLOOR SURFACES TO BE LEVEL. FIELD VERIFY EXISTING CONDITIONS.
14. WINDOW TREATMENT (WDC1) SINGLE ROLLER SHADE, CEILING MOUNTED / OUTSIDE JAMB.
15. NEW EPOXY RESIN (EP1) FLOOR SYSTEM;1/8" (.003M) OVERALL THICKNESS TO EXISTING FLOOR FLOORING TRANSITION: METAL SCREED TRANSITION TO PROTECT EPOXY RESIN (EP1) FLOOR SYSTEM.

LEGEND:

- EXISTING CONSTRUCTION
- NEW CONSTRUCTION
- FEC – FIRE EXTINGUISHER CABINET, RE; A7.3-7.
- FE – BRACKET MOUNTED FIRE EXTINGUISHER
- CORNER GUARD TO BE PROVIDED AT ALL OUTSIDE CORNERS, RE: FINISH SCHEDULE A6.1
- 2-HR FIRE WALL
- FLOOR DRAIN, CW/ PLUMBING. SLOPE FLOOR OF ROOM 1/8"/FOOT TO DRAIN, CW/ STRUCTURAL.

REVISIONS	DATE

CSHQA

C.W. MOORE PLAZA
250 S. 5TH ST. BOISE, ID 83702
(208) 343-4635 FAX (208) 343-1858
http://www.cshqa.com

JOHN D. MAULIN, ARCHITECT
C.W. MOORE PLAZA
250 S. 5TH ST
BOISE, IDAHO
PHONE: 208-343-4635 FAX: 208-343-1858

THESE DRAWINGS AND SPECIFICATIONS, AS INSTRUMENTS OF SERVICE, ARE AND SHALL REMAIN THE PROPERTY OF THE ARCHITECT / ENGINEER WHETHER THE PROJECT FOR WHICH THEY ARE MADE IS EXECUTED OR NOT. THESE DRAWINGS AND SPECIFICATIONS SHALL NOT BE USED BY ANY PERSON OR ENTITY ON OTHER PROJECTS, FOR ADDITIONS TO THIS PROJECT, OR COMPLETION OF THIS PROJECT-WHEN PHASED-WITHOUT THE WRITTEN CONSENT OF CSHQA OR ITS AFFILIATES. Copyright©2013

STAMP

LICENSED ARCHITECT AR.1706

JOHN D. MAULIN STATE OF IDAHO

JULY 12, 2013

ORIGINAL DOCUMENT SIGNED BY ARCHITECT ON FILE WITH THE OWNER. ORIGINAL SIGNED BY: JOHN D. MAULIN ORIGINAL DATE SIGNED: JULY 12, 2013

CAD FILE NAME: 531-320_A1.1.DWG

XREF FILE NAME: 531-320_30X42TLBK.DWG, 531-320_67A1.DWG, 531-320_67GRID.DWG

DRAWING TITLE: FIRST FLOOR PLAN

PROJECT TITLE: BOISE VAMC BUILDING 67 EXPANSION

DATE: 07/12/2013

PROJECT NO.: 531-320

APPROVED: CHIEF OF FACILITY MANAGEMENT SERVICE

APPROVED: MEDICAL CENTER DIRECTOR

BUILDING NUMBER	CHECKED	DRAWN
67	JDM	TWM

LOCATION: VAMC BOISE, IDAHO

DRAWING NO.: A1.1

DWG 16 OF 191

DEPARTMENT OF VETERANS AFFAIRS

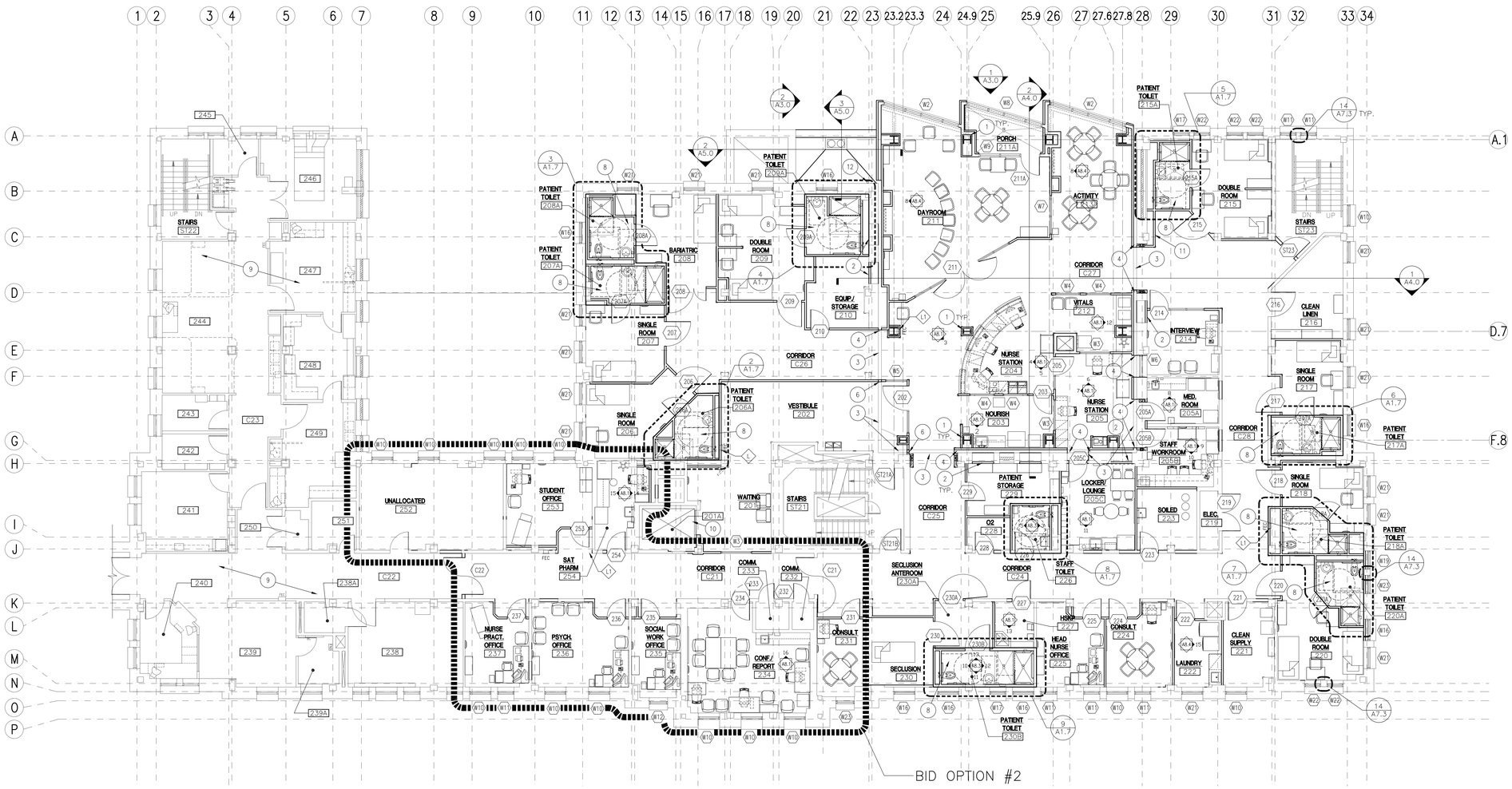

1 SECOND FLOOR PLAN

SCALE: 1/8" = 1'-0"

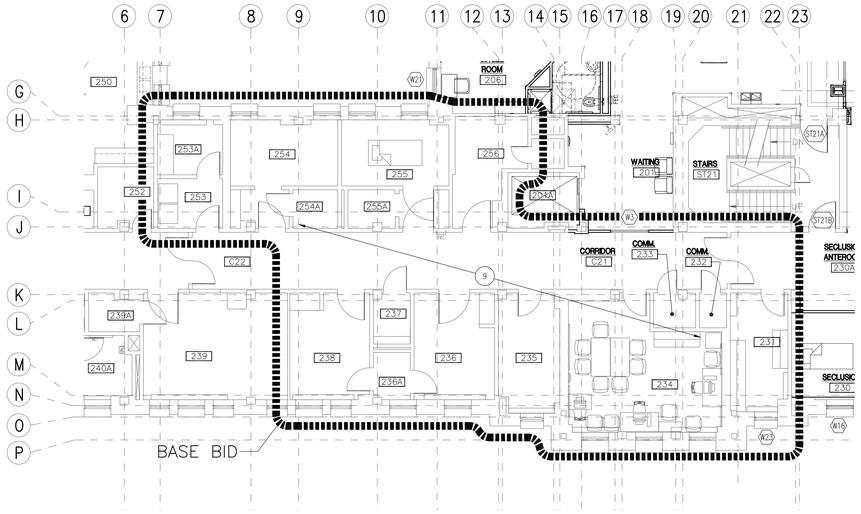

2 SECOND FLOOR PARTIAL PLAN–BASE BID

SCALE: 1/8" = 1'-0"

SEE A1.2-1 FOR ADDITIONAL BASE BID WORK

GENERAL NOTES:

A. RE: A1.5 FOR WALL TYPES AND DIMENSION PLAN.

B. RE: A10.2 FOR FURNITURE AND EQUIPMENT PLAN.

C. RE: A6.3 AND A6.4 FOR DOOR SCHEDULE AND WINDOW TYPES.

D. RE: A6.1 FOR ROOM FINISH SCHEDULE.

E. CONTRACTOR SHALL PROVIDE BLOCKING OR BACKING FOR ALL WALL-MOUNTED AND RECESSED ACCESSORIES AND EQUIPMENT. ASSURE THAT ALL REQUIRED BACKING IS INSTALLED IN WALLS PRIOR TO INSTALLING GYPSUM WALL BOARD. THIS INCLUDES BACKING FOR WALL-MOUNTED DOORSTOPS.

F. PROVIDE MOISTURE RESISTANT GYPSUM WALLBOARD AT WALLS IN ROOMS EXPOSED TO MOISTURE, INCLUDING BUT NOT LIMITED TO RESTROOMS, PLUMBING WALLS WITH SINKS, HOUSEKEEPING, LAUNDRY, SOILED, BATHROOMS AND SIMILAR LOCATIONS. PROVIDE CEMENT BOARD BEHIND TILE FINISHES AND AT SHOWERS.

G. PROVIDE 'J' TRIM AT ALL GYPSUM BOARD TRANSITIONS TO DISSIMILAR MATERIALS.

H. RE: A8.1-1 FOR ACCESSORY MOUNTING HEIGHTS.

I. RE: A9.2 FOR REFLECTED CEILING PLAN.

J. EXTERIOR FINISH INFORMATION IS NOT INDICATED NOR DIMENSIONED ON FLOOR PLAN. REFER TO DIMENSION PLAN, EXTERIOR ELEVATIONS, AND BUILDING SECTIONS FOR ADDITIONAL INFORMATION.

K. THE HINGE SIDE OF ALL DOOR FRAMES SHALL BE MOUNTED 4" [0.10m] MIN. FROM ADJACENT PERPENDICULAR WALL U.N.O.

L. COORDINATE WITH CIVIL AND PLUMBING DRAWINGS FOR BELOW GRADE ROOF DRAIN PIPING.

SHEET NOTES:

1. NEW STEEL COLUMN, RE: DIMENSION PLAN AND CW/ STRUCTURAL DRAWINGS.
2. INFILL EXISTING WINDOW OPENING W/ 4" [0.10m] METAL FRAMING AND (1) LAYER 5/8" GYP. NEW FINISH FACE OF WALL TO ALIGN FLUSH W/ ADJACENT FINISH FACE OF WALL.
3. SEISMIC FLOOR JOINT COVER, RE: A7.3-16.
4. SEISMIC WALL JOINT COVER, RE: A7.1-1, SIMILAR.
5. NO NOTE PROVIDED.
6. SEISMIC WALL JOINT COVER, RE: A7.1-3.
7. NO NOTE PROVIDED.
8. REFER TO A8.3-6 THRU 9 FOR GENERAL FIXTURE AND EQUIPMENT ELEVATIONS. REFER TO ENLARGED FLOOR PLAN FOR ACTUAL FIXTURE AND EQUIPMENT LAYOUT.
9. EXISTING CONSTRUCTION TO REMAIN AND BE PROTECTED.
10. NEW ELEVATOR, ELEVATOR ENTRANCE, AND CONTROLS. PATCH EXISTING FINISHES AS NEEDED TO REMOVE EXISTING, AND INSTALL NEW EQUIPMENT, TYPICAL ALL LEVELS.
11. NEW CHASE FOR RAIN WATER LEADER, CW/PLUMBING.
12. RELOCATED DOWNSPOUT.

LEGEND:

- EXISTING CONSTRUCTION
- NEW CONSTRUCTION
- FEC – FIRE EXTINGUISHER CABINET, RE; A7.3-7.
- FE – BRACKET MOUNTED FIRE EXTINGUISHER
- CORNER GUARD, PROVIDE AT ALL OUTSIDE CORNERS, RE: FINISH SCHEDULE A6.1
- 2-HR FIRE WALL
- FLOOR DRAIN, CW/ PLUMBING. SLOPE FLOOR OF ROOM 1/8"/FOOT TO DRAIN, CW/ STRUCTURAL.

REVISIONS	DATE

CSHQA

C.W. MOORE PLAZA
250 S. 5TH ST. BOISE, ID 83702
(208) 343-4635 FAX (208) 343-1858
http://www.cshqa.com

JOHN D. MAULIN, ARCHITECT
C.W. MOORE PLAZA
250 S. 5TH ST
BOISE, IDAHO
PHONE: 208-343-4635 FAX: 208-343-1858

THESE DRAWINGS AND SPECIFICATIONS, AS INSTRUMENTS OF SERVICE, ARE AND SHALL REMAIN THE PROPERTY OF THE ARCHITECT / ENGINEER WHETHER THE PROJECT FOR WHICH THEY ARE MADE IS EXECUTED OR NOT. THESE DRAWINGS AND SPECIFICATIONS SHALL NOT BE USED BY ANY PERSON OR ENTITY ON OTHER PROJECTS, FOR ADDITIONS TO THIS PROJECT, OR COMPLETION OF THIS PROJECT-WHEN PHASED-WITHOUT THE WRITTEN CONSENT OF CSHQA OR ITS AFFILIATES. Copyright©2013

STAMP: LICENSED ARCHITECT AR.1706 — JOHN D. MAULIN, STATE OF IDAHO — JULY 12, 2013

ORIGINAL DOCUMENT SIGNED BY ARCHITECT ON FILE WITH THE OWNER. ORIGINAL SIGNED BY: JOHN D. MAULIN ORIGINAL DATE SIGNED: JULY 12, 2013

CAD FILE NAME: 531-320_A1.2.DWG

XREF FILE NAME: 531-320_30X42TLBK.DWG, 531-320_67A2.DWG, 531-320_67GRID.DWG

DRAWING TITLE: SECOND FLOOR PLAN

PROJECT TITLE: BOISE VAMC BUILDING 67 EXPANSION

DATE: 07/12/2013

PROJECT NO.: 531-320

APPROVED: CHIEF OF FACILITY MANAGEMENT SERVICE

APPROVED: MEDICAL CENTER DIRECTOR

BUILDING NUMBER: 67 | CHECKED: JDM | DRAWN: TWM

LOCATION: VAMC BOISE, IDAHO

DRAWING NO.: A1.2

DWG 17 OF 191

DEPARTMENT OF VETERANS AFFAIRS

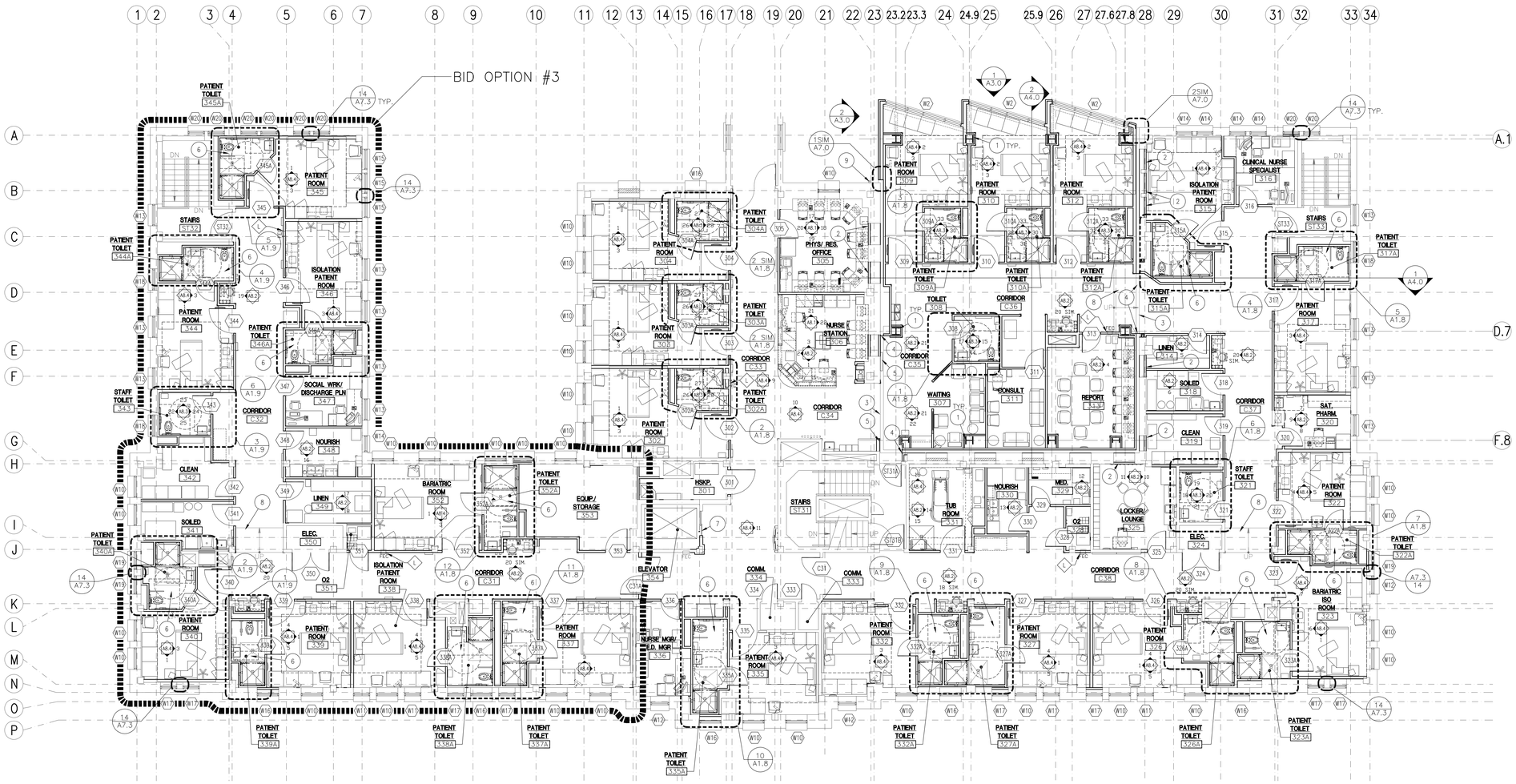

TRUE PLAN

1 THIRD FLOOR PLAN

SCALE: 1/8" = 1'-0"

GENERAL NOTES:

A. RE: A1.6 FOR WALL TYPES AND DIMENSION PLAN.

B. RE: A10.3 FOR FURNITURE AND EQUIPMENT PLAN.

C. RE: A6.4 FOR DOOR SCHEDULE AND WINDOW TYPES.

D. RE: A6.2 FOR FINISHES.

E. CONTRACTOR SHALL PROVIDE BLOCKING OR BACKING FOR ALL WALL-MOUNTED AND RECESSED ACCESSORIES AND EQUIPMENT. ASSURE THAT ALL REQUIRED BACKING IS INSTALLED IN WALLS PRIOR TO INSTALLING GYPSUM WALL BOARD. THIS INCLUDES BACKING FOR WALL-MOUNTED DOORSTOPS.

F. PROVIDE MOISTURE RESISTANT GYPSUM WALLBOARD AT WALLS IN ROOMS EXPOSED TO MOISTURE, INCLUDING BUT NOT LIMITED TO RESTROOMS, PLUMBING WALLS WITH SINKS, HOUSEKEEPING, LAUNDRY, SOILED, BATHROOMS AND SIMILAR LOCATIONS. PROVIDE CEMENT BOARD BEHIND TILE FINISHES AND AT SHOWERS.

G. PROVIDE 'J' TRIM AT ALL GYPSUM BOARD TRANSITIONS TO DISSIMILAR MATERIALS.

H. RE: A8.1-1 FOR ACCESSORY / EQUIPMENT TYPES INDICATED.

I. RE: A9.3 FOR REFLECTED CEILING PLAN.

J. EXTERIOR FINISH INFORMATION IS NOT INDICATED NOR DIMENSIONED ON FLOOR PLAN. REFER TO DIMENSION PLAN, EXTERIOR ELEVATIONS, AND BUILDING SECTIONS FOR ADDITIONAL INFORMATION.

K. THE HINGE SIDE OF ALL DOOR FRAMES SHALL BE MOUNTED 4" MIN. [0.10m] FROM ADJACENT PERPENDICULAR WALL U.N.O.

L. COORDINATE WITH CIVIL AND PLUMBING DRAWINGS FOR BELOW GRADE ROOF DRAIN PIPING.

SHEET NOTES:

1. NEW STEEL COLUMN, RE: DIMENSION PLAN AND CW/ STRUCTURAL DRAWINGS.
2. INFILL EXISTING WINDOW OPENING W/ 4" [0.10m] METAL FRAMING AND (1) LAYER 5/8" GYP. NEW FINISH FACE OF WALL TO ALIGN FLUSH W/ ADJACENT FINISH FACE OF WALL.
3. SEISMIC FLOOR JOINT COVER, RE: A7.3-16.
4. SEISMIC WALL JOINT COVER, RE: A7.1-1, SIMILAR.
5. SEISMIC FLOOR JOINT COVER, RE: A7.3-15.
6. REFER TO A8.3-34 THRU 37 FOR GENERAL FIXTURE AND EQUIPMENT ELEVATIONS. REFER TO ENLARGED FLOOR PLAN FOR ACTUAL FIXTURE AND EQUIPMENT LAYOUT.
7. NEW ELEVATOR, ELEVATOR ENTRANCE, AND CONTROLS. PATCH EXISTING FINISHES AS NEEDED TO REMOVE EXISTING, AND INSTALL NEW EQUIPMENT, TYPICAL ALL LEVELS.
8. NEW SLOPED WALKING SURFACE TO BE CONCRETE WITH MAXIMUM SLOPE OF 1:20.
9. RELOCATED DOWNSPOUT.

LEGEND:

- EXISTING CONSTRUCTION
- NEW CONSTRUCTION
- FEC — FIRE EXTINGUISHER CABINET, RE; A7.3-7.
- FE — BRACKET MOUNTED FIRE EXTINGUISHER
- CORNER GUARD, PROVIDE AT ALL OUTSIDE CORNERS, RE: FINISH SCHEDULE A6.2
- 2-HR FIRE WALL
- FD — FLOOR DRAIN, CW/ PLUMBING. SLOPE FLOOR OF ROOM 1/8"/FOOT TO DRAIN, CW/ STRUCTURAL.

REVISIONS	DATE

CSHQA

C.W. MOORE PLAZA
250 S. 5TH ST. BOISE, ID 83702
(208) 343-4635 FAX (208) 343-1858
http://www.cshqa.com

JOHN D. MAULIN, ARCHITECT
C.W. MOORE PLAZA
250 S. 5TH ST
BOISE, IDAHO
PHONE: 208-343-4635 FAX: 208-343-1858

THESE DRAWINGS AND SPECIFICATIONS, AS INSTRUMENTS OF SERVICE, ARE AND SHALL REMAIN THE PROPERTY OF THE ARCHITECT / ENGINEER WHETHER THE PROJECT FOR WHICH THEY ARE MADE IS EXECUTED OR NOT. THESE DRAWINGS AND SPECIFICATIONS SHALL NOT BE USED BY ANY PERSON OR ENTITY ON OTHER PROJECTS, FOR ADDITIONS TO THIS PROJECT, OR COMPLETION OF THIS PROJECT-WHEN PHASED-WITHOUT THE WRITTEN CONSENT OF CSHQA OR ITS AFFILIATES. Copyright©2013

STAMP
LICENSED ARCHITECT
AR 1706
JOHN D. MAULIN
STATE OF IDAHO
JULY 12, 2013

ORIGINAL DOCUMENT SIGNED BY ARCHITECT ON FILE WITH THE OWNER
ORIGINAL SIGNED BY: JOHN D. MAULIN
ORIGINAL DATE SIGNED: JULY 12, 2013

CAD FILE NAME:
531-320_A1.3.DWG

XREF FILE NAME:
531-320_30X42TLBK.DWG
531-320_67A3.DWG
531-320_67GRID.DWG

DRAWING TITLE
THIRD FLOOR PLAN

APPROVED: CHIEF OF FACILITY MANAGEMENT SERVICE

APPROVED: MEDICAL CENTER DIRECTOR

PROJECT TITLE
BOISE VAMC
BUILDING 67 EXPANSION

BUILDING NUMBER	CHECKED	DRAWN
67	JDM	TWM

LOCATION
VAMC BOISE, IDAHO

DATE 07/12/2013
PROJECT NO: 531-320
DRAWING NO. A1.3
DWG 18 OF 191

DEPARTMENT OF VETERANS AFFAIRS

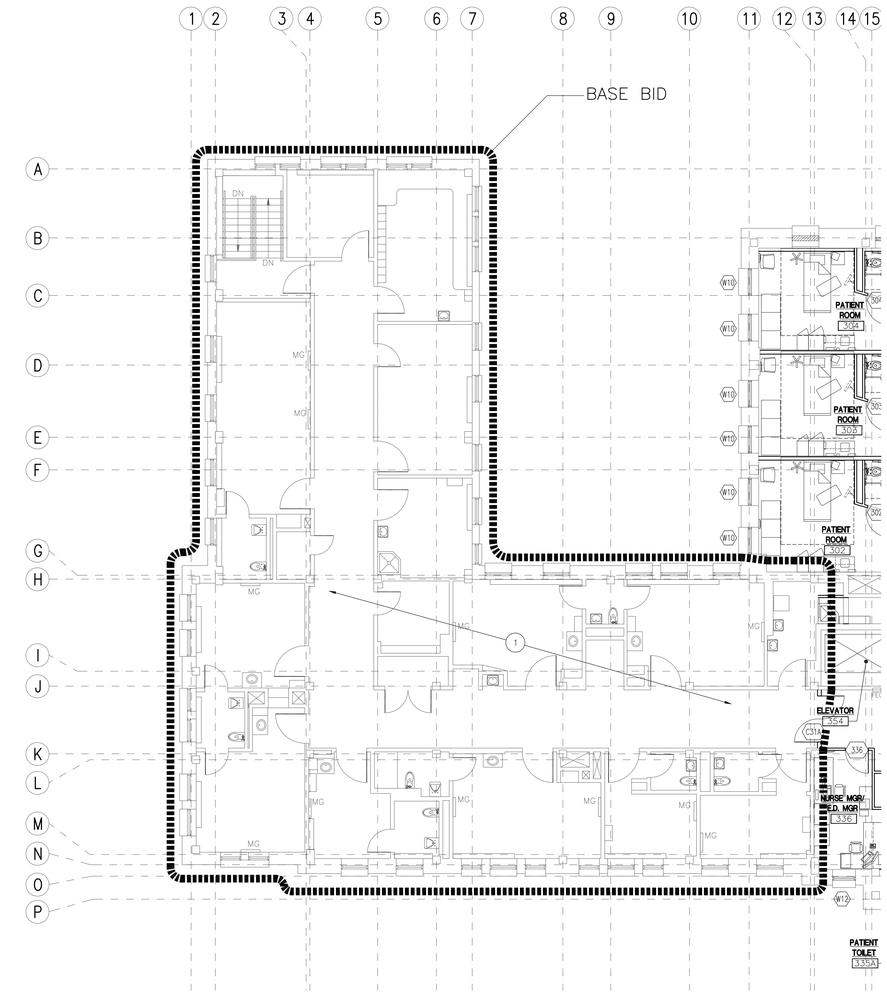

TRUE PLAN

1 THIRD FLOOR PARTIAL PLAN– BASE BID

SCALE: 1/8" = 1'–0"

SEE A1.3–1 FOR ADDITIONAL BASE BID WORK

GENERAL NOTES:

A. RE: A1.6 FOR WALL TYPES AND DIMENSION PLAN.

B. RE: A10.3 FOR FURNITURE AND EQUIPMENT PLAN.

C. RE: A6.4 FOR DOOR SCHEDULE AND WINDOW TYPES.

D. RE: A6.2 FOR FINISHES.

E. CONTRACTOR SHALL PROVIDE BLOCKING OR BACKING FOR ALL WALL–MOUNTED AND RECESSED ACCESSORIES AND EQUIPMENT. ASSURE THAT ALL REQUIRED BACKING IS INSTALLED IN WALLS PRIOR TO INSTALLING GYPSUM WALL BOARD. THIS INCLUDES BACKING FOR WALL–MOUNTED DOORSTOPS.

F. PROVIDE MOISTURE RESISTANT GYPSUM WALLBOARD AT WALLS IN ROOMS EXPOSED TO MOISTURE, INCLUDING BUT NOT LIMITED TO RESTROOMS, PLUMBING WALLS WITH SINKS, HOUSEKEEPING, LAUNDRY, SOILED, BATHROOMS AND SIMILAR LOCATIONS. PROVIDE CEMENT BOARD BEHIND TILE FINISHES AND AT SHOWERS.

G. PROVIDE 'J' TRIM AT ALL GYPSUM BOARD TRANSITIONS TO DISSIMILAR MATERIALS.

H. RE: A8.1–1 FOR ACCESSORY / EQUIPMENT TYPES INDICATED.

I. RE: A9.3 FOR REFLECTED CEILING PLAN.

J. EXTERIOR FINISH INFORMATION IS NOT INDICATED NOR DIMENSIONED ON FLOOR PLAN. REFER TO DIMENSION PLAN, EXTERIOR ELEVATIONS, AND BUILDING SECTIONS FOR ADDITIONAL INFORMATION.

K. THE HINGE SIDE OF ALL DOOR FRAMES SHALL BE MOUNTED 4" MIN. [0.10m] FROM ADJACENT PERPENDICULAR WALL U.N.O.

L. COORDINATE WITH CIVIL AND PLUMBING DRAWINGS FOR BELOW GRADE ROOF DRAIN PIPING.

SHEET NOTES:

1. EXISTING CONSTRUCTION TO REMAIN AND BE PROTECTED.

LEGEND:

EXISTING CONSTRUCTION

NEW CONSTRUCTION

FEC – FIRE EXTINGUISHER CABINET, RE; A7.3–7.

FE – BRACKET MOUNTED FIRE EXTINGUISHER

CORNER GUARD, PROVIDE AT ALL OUTSIDE CORNERS RE; FINISH SCHEDULE A6.2

2–HR FIRE WALL

FLOOR DRAIN, CW/ PLUMBING. SLOPE FLOOR OF ROOM 1/8"/FOOT TO DRAIN, CW/ STRUCTURAL.

REVISIONS | DATE

CSHQA

C.W. MOORE PLAZA
250 S. 5TH ST. BOISE, ID 83702
(208) 343-4635 FAX (208) 343-1858
http://www.cshqa.com

JOHN D. MAULIN, ARCHITECT
C.W. MOORE PLAZA
250 S. 5TH ST
BOISE, IDAHO
PHONE: 208-343-4635 FAX: 208-343-1858

THESE DRAWINGS AND SPECIFICATIONS, AS INSTRUMENTS OF SERVICE, ARE AND SHALL REMAIN THE PROPERTY OF THE ARCHITECT / ENGINEER WHETHER THE PROJECT FOR WHICH THEY ARE MADE IS EXECUTED OR NOT. THESE DRAWINGS AND SPECIFICATIONS SHALL NOT BE USED BY ANY PERSON OR ENTITY ON OTHER PROJECTS, FOR ADDITIONS TO THIS PROJECT, OR COMPLETION OF THIS PROJECT–WHEN PHASED–WITHOUT THE WRITTEN CONSENT OF CSHQA OR ITS AFFILIATES. Copyright©2013

STAMP
LICENSED ARCHITECT AR 1106
JOHN D. MAULIN
STATE OF IDAHO
JULY 12, 2013

ORIGINAL DOCUMENT SIGNED BY ARCHITECT ON FILE WITH THE OWNER
ORIGINAL SIGNED BY: JOHN D. MAULIN
ORIGINAL DATE SIGNED: JULY 12, 2013

CAD FILE NAME: 531–320_A1.3A.DWG

XREF FILE NAME: 531–320_30X42TLBK.DWG
531–320_67A3.DWG
531–320_67GRID.DWG

DRAWING TITLE: THIRD FLOOR PARTIAL PLAN– BASE BID

APPROVED: CHIEF OF FACILITY MANAGEMENT SERVICE

APPROVED: MEDICAL CENTER DIRECTOR

PROJECT TITLE: BOISE VAMC BUILDING 67 EXPANSION

BUILDING NUMBER: 67 | CHECKED: JDM | DRAWN: TWM

LOCATION: VAMC BOISE, IDAHO

DATE: 07/12/2013

PROJECT NO: 531–320

DRAWING NO: A1.3A

DEPARTMENT OF VETERANS AFFAIRS

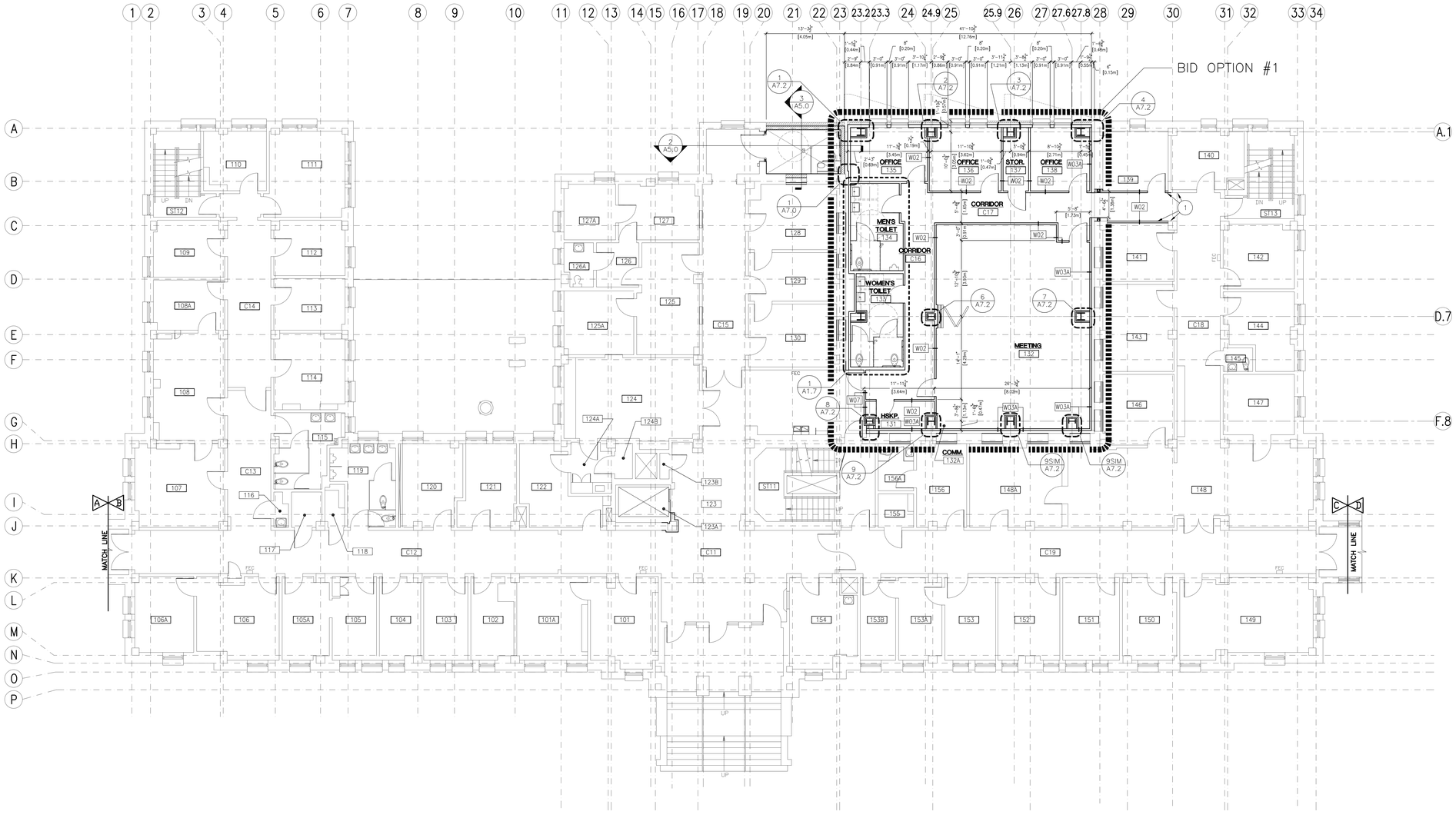

TRUE PLAN

1 FIRST FLOOR DIMENSION PLAN

SCALE: 1/8" = 1'-0"

GENERAL NOTES:

A. PARTITION DIMENSIONS ARE GIVEN TO THE FACE OF STUD UNLESS OTHERWISE NOTED.

B. MASONRY DIMENSIONS ARE GIVEN TO FACE OF MASONRY AND TO THE FACE OF ROUGH OPENINGS.

C. DOOR AND WINDOW OPENING LOCATIONS ARE DIMENSIONED TO ROUGH OPENING OR CENTERLINE OF OPENING. COORDINATE WITH DOOR SCHEDULE AND WINDOW TYPES, SHEET A6.3 AND A6.4.

D. CONTRACTOR SHALL PROVIDE BLOCKING OR BACKING FOR ALL WALL-MOUNTED AND RECESSED ACCESSORIES AND EQUIPMENT. ASSURE THAT ALL REQUIRED BACKING IS INSTALLED IN WALLS PRIOR TO INSTALLING GYPSUM WALL BOARD. THIS INCLUDES BACKING FOR WALL-MOUNTED DOORSTOPS.

E. ALL GYPSUM WALL BOARD TO BE TYPE 'X'.

F. GYPSUM WALL BOARD SHALL EXTEND FULL HEIGHT OF WALL TO UNDERSIDE OF DECK ABOVE UNLESS OTHERWISE NOTED. SEE WALL TYPES.

G. UTILIZE MOISTURE RESISTANT GYPSUM WALL BOARD ON ALL WALLS AT: BATHS, SPA AND TOILETS.

H. PENETRATIONS THROUGH RATED ASSEMBLIES SHALL BE FIRE STOPPED IN ACCORDANCE WITH NFPA STANDARDS.

I. REFER TO SHEET A1.1 FOR EXTENTS OF BASE BID WORK.

J. PROVIDE MOISTURE RESISTANT GYPSUM WALLBOARD AT WALLS IN ROOMS EXPOSED TO MOISTURE, INCLUDING BUT NOT LIMITED TO RESTROOMS, PLUMBING WALLS WITH SINKS, HOUSEKEEPING, LAUNDRY, SOILED, BATHROOMS AND SIMILAR LOCATIONS. PROVIDE CEMENT BOARD BEHIND TILE FINISHES AND AT SHOWERS.

WALL TYPES:

W01 — NON-RATED PARTITION
16mm (5/8") GYPSUM WALL BOARD EACH SIDE OF 92mm (3 5/8") METAL STUDS (U.O.N) @ 406mm (16") O.C. TO 150mm (6") ABOVE CEILING (U.O.N.); BRACE AT 1219mm (48") O.C. ALTERNATING TO STRUCTURE ABOVE.

W02 — NON-RATED SOUND WALL
16mm (5/8") GYPSUM WALL BOARD EACH SIDE OF 92mm (3 5/8") METAL STUDS (U.O.N.) @ 406mm (16") O.C.; EXTEND TO DECK ABOVE; TAPE JOINTS ABOVE CEILING. PROVIDE SOUND BATT INSULATION FROM FINISH FLOOR TO DECK ABOVE. PROVIDE ACOUSTICAL SEALANT AT ALL WALL PENETRATION.

W02A — NON-RATED SOUND WALL
SAME AS W02 EXCEPT WITH 150mm (6") METAL STUDS

W03 — NON-RATED CHASE WALL
16mm (5/8") GYPSUM WALL BOARD ON ONE SIDE OF 92mm (3 5/8") METAL STUDS (U.O.N) @ 406mm (16") O.C. TO 150mm (6") ABOVE CEILING (U.O.N.); BRACE AT 1219mm (48") O.C. ALTERNATING TO STRUCTURE ABOVE.

W03A — NON-RATED CHASE WALL
16mm (5/8") GYPSUM WALL BOARD ON ONE SIDE OF 92mm (3 5/8") METAL STUDS (U.O.N) @ 406mm (16") O.C.; EXTEND TO DECK ABOVE; TAPE JOINTS ABOVE CEILING. CONTRACTORS OPTION TO BRACE OFF OF ADJACENT WALL.

W03B — NON-RATED CHASE WALL
SAME AS W03 EXCEPT WITH 150mm (6") METAL STUDS.

W03C — NON-RATED CHASE WALL
SAME AS W03A EXCEPT WITH 150mm (6") METAL STUDS, R19 BATT INSULATION AND VAPOR BARRIER ON INSIDE.

W03D — NON-RATED CHASE WALL
SAME AS W03A EXCEPT PROVIDE SOUND BATT INSULATION FROM FINISH FLOOR TO DECK ABOVE. PROVIDE ACOUSTICAL SEALANT AT ALL WALL PENETRATIONS.

W04 — NON-RATED WALL FURRING @ RATED COLUMN
16mm (5/8") GYPSUM WALL BOARD ON ONE SIDE OF 63.5mm (2 1/2") METAL STUDS (U.O.N) @ 406mm (16") O.C. TO 150mm (6") ABOVE CEILING (U.O.N.); WHERE NOT IN ALIGNMENT WITH ADJACENT WALL, HOLD TIGHT TO COLUMN FIREPROOFING (U.O.N); BRACE AT 1219mm (48") O.C. ALTERNATING TO STRUCTURE ABOVE.

W04A — NON-RATED WALL FURRING @ RATED COLUMN
16mm (5/8") GYPSUM WALL BOARD ON ONE SIDE OF 63.5mm (2 1/2") METAL STUDS (U.O.N) @ 406mm (16") O.C.; EXTEND TO DECK ABOVE; TAPE JOINTS ABOVE CEILING. WHERE NOT IN ALIGNMENT WITH ADJACENT WALL, HOLD TIGHT TO COLUMN FIREPROOFING (U.O.N).

W05 — NON-RATED SOUND WALL
16mm (5/8") GYPSUM WALL BOARD EACH SIDE OF 101mm (4") METAL STUDS (U.O.N.) @ 406mm (16") O.C.; EXTEND TO DECK ABOVE; TAPE JOINTS ABOVE CEILING. GYPSUM TO EXTEND TO DECK ABOVE ON CORRIDOR SIDE AND 6" ABOVE CEILING ON PATIENT ROOM SIDE. PROVIDE SOUND BATT INSULATION FROM FINISH FLOOR TO DECK ABOVE. PROVIDE ACOUSTICAL SEALANT AT ALL WALL PENETRATIONS.

W06 — 1-HOUR RATED WALL (GA. FILE NO. WP 1072)
16mm (5/8") GYPSUM WALL BOARD EACH SIDE OF 92mm (3 5/8") METAL STUDS @ 406mm (16") O.C.; EXTEND TO DECK ABOVE; FIRE TAPE JOINTS ABOVE CEILING; FIRESAFE JOINTS.

W07 — 1-HOUR RATED SOUND WALL (GA. FILE NO. WP 1072)
16mm (5/8") GYPSUM WALL BOARD EACH SIDE OF 92mm (3 5/8") METAL STUDS @ 406mm (16") O.C.; EXTEND TO DECK ABOVE; FIRE TAPE JOINTS ABOVE CEILING; FIRESAFE JOINTS. PROVIDE SOUND BATT INSULATION FROM FINISH FLOOR TO DECK ABOVE. PROVIDE ACOUSTICAL SEALANT AT ALL WALL PENETRATIONS.

W07A — 1-HOUR RATED SOUND WALL (GA. FILE NO. WP 1072)
SAME AS W07 EXCEPT WITH 150mm (6") METAL STUDS. PROVIDE ACOUSTICAL SEALANT AT ALL WALL PENETRATIONS.

W08 — 2-HOUR RATED SHAFT WALL (UL DESIGN U415)
25mm (1") SHAFT WALL LINER AND 16mm (2) LAYERS (5/8") GYPSUM WALL BOARD; 89mm (3 1/2") METAL C-H STUDS @ 610mm (24") O.C.; EXTEND TO UNDERSIDE OF DECK ABOVE; FIRE TAPE JOINTS ABOVE CEILING; FIRESAFE JOINTS.

W09 — 2-HOUR RATED WALL (UL DESIGN U419)
2 LAYERS 16mm (5/8") GYPSUM WALL BOARD EACH SIDE OF 92mm (3 5/8") METAL STUDS @ 406mm (16") O.C.; EXTEND TO DECK ABOVE; FIRE TAPE JOINTS ABOVE CEILING; FIRESAFE JOINTS.

NOTES:
1) REFER TO SHEET A7.1 FOR DETAILS ON LATERAL BRACING OF WALLS, NON-RATED SLIP TRACKS, AND RATED WALL TERMINATIONS.

2) PROVIDE IMPACT RESISTANT GYPSUM BOARD ON ALL WALLS IN ROOMS: 206, 206A, 207, 207A, 208, 208A, 209, 209A, 215, 215A, 217, 217A, 218, 218A, 220, AND 220A

SHEET NOTES:

1. ALIGN FINISH FACE OF NEW CONSTRUCTION WITH EXISTING FINISH FACE OF ADJACENT CONSTRUCTION.

REVISIONS	DATE

CSHQA
C.W. MOORE PLAZA
250 S. 5TH ST. BOISE, ID 83702
(208) 343-4635 FAX (208) 343-1858
http://www.cshqa.com

JOHN D. MAULIN, ARCHITECT
C.W. MOORE PLAZA
250 S. 5TH ST
BOISE, IDAHO
PHONE: 208-343-4635 FAX: 208-343-1858

THESE DRAWINGS AND SPECIFICATIONS, AS INSTRUMENTS OF SERVICE, ARE AND SHALL REMAIN THE PROPERTY OF THE ARCHITECT / ENGINEER WHETHER THE PROJECT FOR WHICH THEY ARE MADE IS EXECUTED OR NOT. THESE DRAWINGS AND SPECIFICATIONS SHALL NOT BE USED BY ANY PERSON OR ENTITY ON OTHER PROJECTS, FOR ADDITIONS TO THIS PROJECT, OR COMPLETION OF THIS PROJECT-WHEN PHASED-WITHOUT THE WRITTEN CONSENT OF CSHQA OR ITS AFFILIATES. Copyright©2013

STAMP
LICENSED ARCHITECT
AR 1106
JOHN D. MAULIN
STATE OF IDAHO
JULY 12, 2013

ORIGINAL DOCUMENT SIGNED BY ARCHITECT ON FILE WITH THE OWNER
ORIGINAL SIGNED BY: JOHN D. MAULIN
ORIGINAL DATE SIGNED: JULY 12, 2013

CAD FILE NAME:
531-320_A1.4.DWG

XREF FILE NAME:
531-320_30X42TLBK.DWG
531-320_67A1.DWG
531-320_XWALL TYPES.DWG
531-320_67GRID.DWG

DRAWING TITLE
FIRST FLOOR DIMENSION PLAN

APPROVED: CHIEF OF FACILITY MANAGEMENT SERVICE

APPROVED: MEDICAL CENTER DIRECTOR

PROJECT TITLE
BOISE VAMC
BUILDING 67 EXPANSION

BUILDING NUMBER	CHECKED	DRAWN
67	JDM	TWM

LOCATION
VAMC BOISE, IDAHO

DATE 07/12/2013
PROJECT NO. 531-320
DRAWING NO. A1.4
DWG 20 OF 191

DEPARTMENT OF VETERANS AFFAIRS

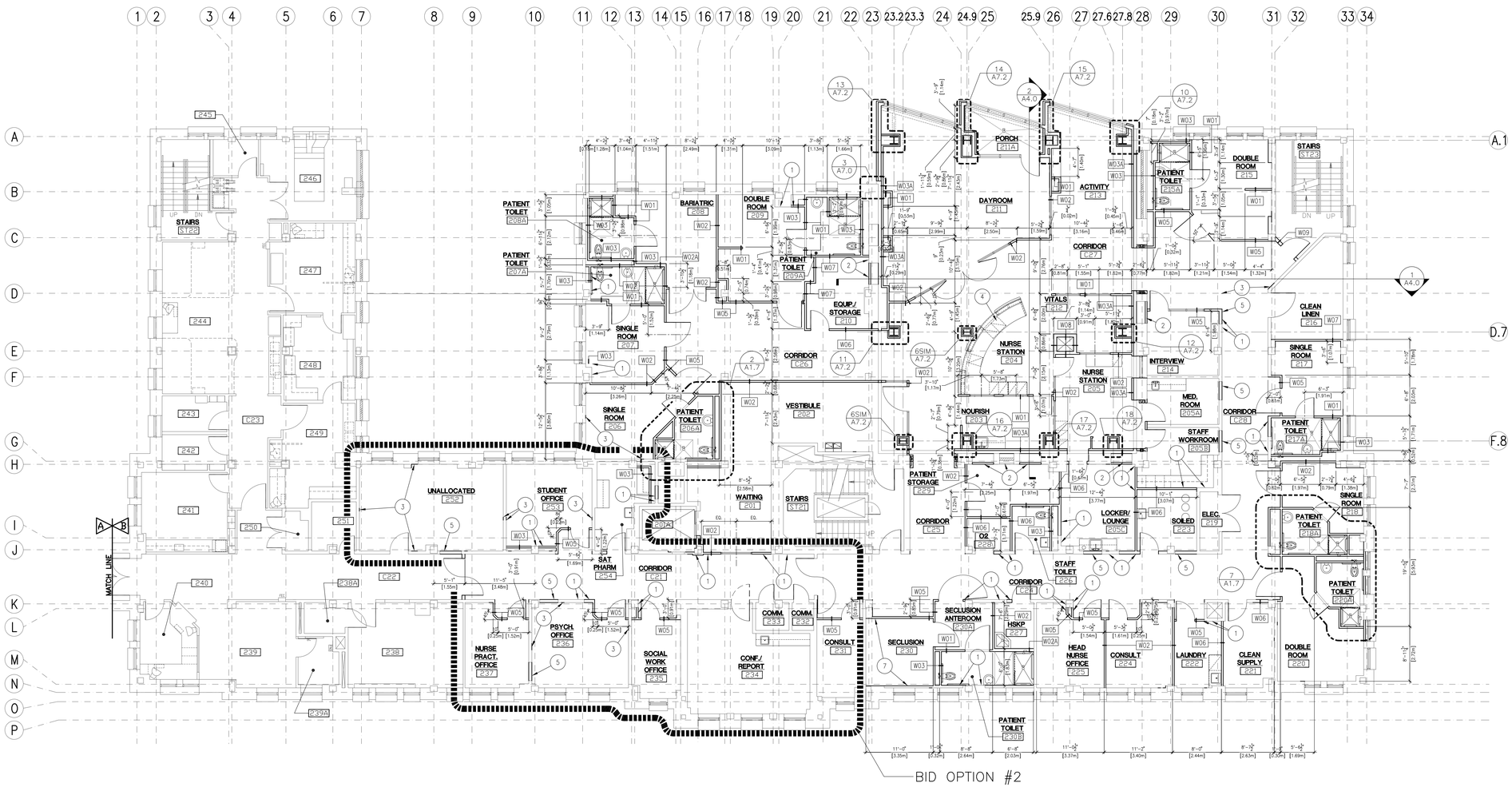

1 SECOND FLOOR DIMENSION PLAN

SCALE: 1/8" = 1'-0"

TRUE PLAN

GENERAL NOTES:

A. PARTITION DIMENSIONS ARE GIVEN TO THE FACE OF STUD UNLESS OTHERWISE NOTED.

B. MASONRY DIMENSIONS ARE GIVEN TO FACE OF MASONRY AND TO THE FACE OF ROUGH OPENINGS.

C. DOOR AND WINDOW OPENING LOCATIONS ARE DIMENSIONED TO ROUGH OPENING OR CENTERLINE OF OPENING. COORDINATE WITH DOOR SCHEDULE AND WINDOW TYPES, SHEET A6.3 AND A6.4.

D. CONTRACTOR SHALL PROVIDE BLOCKING OR BACKING FOR ALL WALL-MOUNTED AND RECESSED ACCESSORIES AND EQUIPMENT. ASSURE THAT ALL REQUIRED BACKING IS INSTALLED IN WALLS PRIOR TO INSTALLING GYPSUM WALL BOARD. THIS INCLUDES BACKING FOR WALL-MOUNTED DOORSTOPS.

E. ALL GYPSUM WALL BOARD TO BE TYPE 'X'.

F. GYPSUM WALL BOARD SHALL EXTEND FULL HEIGHT OF WALL TO UNDERSIDE OF DECK ABOVE UNLESS OTHERWISE NOTED. SEE WALL TYPES.

G. UTILIZE MOISTURE RESISTANT GYPSUM WALL BOARD ON ALL WALLS AT: BATHS, SPA AND TOILETS.

H. PENETRATIONS THROUGH RATED ASSEMBLIES SHALL BE FIRE STOPPED IN ACCORDANCE WITH NFPA STANDARDS.

I. PROVIDE MOISTURE RESISTANT GYPSUM WALLBOARD AT WALLS IN ROOMS EXPOSED TO MOISTURE. INCLUDING BUT NOT LIMITED TO RESTROOMS, PLUMBING WALLS WITH SINKS, HOUSEKEEPING, LAUNDRY, SOILED, BATHROOMS AND SIMILAR LOCATIONS. PROVIDE CEMENT BOARD BEHIND TILE FINISHES AND AT SHOWERS.

WALL TYPES:

W01	NON-RATED PARTITION 16mm (5/8") GYPSUM WALL BOARD EACH SIDE OF 92mm (3 5/8") METAL STUDS (U.O.N) @ 406mm (16") O.C. TO 150mm (6") ABOVE CEILING (U.O.N.); BRACE AT 1219mm (48") O.C. ALTERNATING TO STRUCTURE ABOVE.
W02	NON-RATED SOUND WALL 16mm (5/8") GYPSUM WALL BOARD EACH SIDE OF 92mm (3 5/8") METAL STUDS (U.O.N.) @ 406mm (16") O.C.; EXTEND TO DECK ABOVE; TAPE JOINTS ABOVE CEILING. PROVIDE SOUND BATT INSULATION FROM FINISH FLOOR TO DECK ABOVE. PROVIDE ACOUSTICAL SEALANT AT ALL WALL PENETRATION.
W02A	NON-RATED SOUND WALL SAME AS W02 EXCEPT WITH 150mm (6") METAL STUDS
W03	NON-RATED CHASE WALL 16mm (5/8") GYPSUM WALL BOARD ON ONE SIDE OF 92mm (3 5/8") METAL STUDS (U.O.N) @ 406mm (16") O.C. TO 150mm (6") ABOVE CEILING (U.O.N.); BRACE AT 1219mm (48") O.C. ALTERNATING TO STRUCTURE ABOVE.
W03A	NON-RATED CHASE WALL 16mm (5/8") GYPSUM WALL BOARD ON ONE SIDE OF 92mm (3 5/8") METAL STUDS (U.O.N) @ 406mm (16") O.C.; EXTEND TO DECK ABOVE; TAPE JOINTS ABOVE CEILING. CONTRACTORS OPTION TO BRACE OFF OF ADJACENT WALL.
W03B	NON-RATED CHASE WALL SAME AS W03 EXCEPT WITH 150mm (6") METAL STUDS.
W03C	NON-RATED CHASE WALL SAME AS W03A EXCEPT WITH 150mm (6") METAL STUDS, R19 BATT INSULATION AND VAPOR BARRIER ON INSIDE.
W03D	NON-RATED CHASE WALL SAME AS W03A EXCEPT PROVIDE SOUND BATT INSULATION FROM FINISH FLOOR TO DECK ABOVE. PROVIDE ACOUSTICAL SEALANT AT ALL WALL PENETRATIONS.
W04	NON-RATED WALL FURRING @ RATED COLUMN 16mm (5/8") GYPSUM WALL BOARD ON ONE SIDE OF 63.5mm (2 1/2") METAL STUDS (U.O.N) @ 406mm (16") O.C. TO 150mm (6") ABOVE CEILING (U.O.N.); WHERE NOT IN ALIGNMENT WITH ADJACENT WALL, HOLD TIGHT TO COLUMN FIREPROOFING (U.O.N); BRACE AT 1219mm (48") O.C. ALTERNATING TO STRUCTURE ABOVE.
W04A	NON-RATED WALL FURRING @ RATED COLUMN 16mm (5/8") GYPSUM WALL BOARD ON ONE SIDE OF 63.5mm (2 1/2") METAL STUDS (U.O.N) @ 406mm (16") O.C.; EXTEND TO DECK ABOVE; TAPE JOINTS ABOVE CEILING. WHERE NOT IN ALIGNMENT WITH ADJACENT WALL, HOLD TIGHT TO COLUMN FIREPROOFING (U.O.N).
W05	NON-RATED SOUND WALL 16mm (5/8") GYPSUM WALL BOARD EACH SIDE OF 101mm (4") METAL STUDS (U.O.N.) @ 406mm (16") O.C.; EXTEND TO DECK ABOVE; TAPE JOINTS ABOVE CEILING. GYPSUM TO EXTEND TO DECK ABOVE ON CORRIDOR SIDE AND 6" ABOVE CEILING ON PATIENT ROOM SIDE. PROVIDE SOUND BATT INSULATION FROM FINISH FLOOR TO DECK ABOVE. PROVIDE ACOUSTICAL SEALANT AT ALL WALL PENETRATIONS.
W06	1-HOUR RATED WALL (GA. FILE NO. WP 1072) 16mm (5/8") GYPSUM WALL BOARD EACH SIDE OF 92mm (3 5/8") METAL STUDS @ 406mm (16") O.C.; EXTEND TO DECK ABOVE; FIRE TAPE JOINTS ABOVE CEILING; FIRESAFE JOINTS.
W07	1-HOUR RATED SOUND WALL (GA. FILE NO. WP 1072) 16mm (5/8") GYPSUM WALL BOARD EACH SIDE OF 92mm (3 5/8") METAL STUDS @ 406mm (16") O.C.; EXTEND TO DECK ABOVE; FIRE TAPE JOINTS ABOVE CEILING; FIRESAFE JOINTS. PROVIDE SOUND BATT INSULATION FROM FINISH FLOOR TO DECK ABOVE. PROVIDE ACOUSTICAL SEALANT AT ALL WALL PENETRATIONS.
W07A	1-HOUR RATED SOUND WALL (GA. FILE NO. WP 1072) SAME AS W07 EXCEPT WITH 150mm (6") METAL STUDS. PROVIDE ACOUSTICAL SEALANT AT ALL WALL PENETRATIONS.
W08	2-HOUR RATED SHAFT WALL (UL DESIGN U415) 25mm (1") SHAFT WALL LINER AND 16mm (2) LAYERS (5/8") GYPSUM WALL BOARD; 89mm (3 1/2") METAL C-H STUDS @ 610mm (24") O.C.; EXTEND TO UNDERSIDE OF DECK ABOVE; FIRE TAPE JOINTS ABOVE CEILING; FIRESAFE JOINTS.
W09	2-HOUR RATED WALL (UL DESIGN U419) 2 LAYERS 16mm (5/8") GYPSUM WALL BOARD EACH SIDE OF 92mm (3 5/8") METAL STUDS @ 406mm (16") O.C.; EXTEND TO DECK ABOVE; FIRE TAPE JOINTS ABOVE CEILING; FIRESAFE JOINTS.

NOTES:
1) REFER TO SHEET A7.1 FOR DETAILS ON LATERAL BRACING OF WALLS, NON-RATED SLIP TRACKS, AND RATED WALL TERMINATIONS.

2) PROVIDE IMPACT RESISTANT GYPSUM BOARD ON ALL WALLS IN ROOMS: 206, 206A, 207, 207A, 208, 208A, 209, 209A, 215, 215A, 217, 217A, 218, 218A, 220, AND 220A

SHEET NOTES:

1. ALIGN FINISH FACE OF NEW CONSTRUCTION WITH EXISTING FINISH FACE OF ADJACENT CONSTRUCTION.
2. NEW FINISH FACE OF WALL TO ALIGN FLUSH W/ ADJACENT FINISH FACE OF WALL.
3. PATCH WALL, TYPICAL WHERE EXISTING WALLS ARE REMOVED.
4. REFER TO A1.9-7 FOR DIMENSIONS OF NURSE STATION 204 MILLWORK.
5. INFILL EXISTING DOOR OPENING W/ METAL FRAMING AND (1) LAYER 5/8" GYP. EACH SIDE. NEW FINISH FACE OF WALL TO ALIGN FLUSH W/ ADJACENT FINISH FACE OF WALL.
6. SECLUSION 230 TO HAVE (2) LAYERS OF 5/8"[0.016m] ON EACH WALL WITH THE FINISH LAYER TO BE ABUSE RESISTANT.

REVISIONS | DATE

CSHQA
C.W. MOORE PLAZA
250 S. 5TH ST. BOISE, ID 83702
(208) 343-4635 FAX (208) 343-1858
http://www.cshqa.com

JOHN D. MAULIN, ARCHITECT
C.W. MOORE PLAZA
250 S. 5TH ST
BOISE, IDAHO
PHONE: 208-343-4635 FAX: 208-343-1858

THESE DRAWINGS AND SPECIFICATIONS, AS INSTRUMENTS OF SERVICE, ARE AND SHALL REMAIN THE PROPERTY OF THE ARCHITECT / ENGINEER WHETHER THE PROJECT FOR WHICH THEY ARE MADE IS EXECUTED OR NOT. THESE DRAWINGS AND SPECIFICATIONS SHALL NOT BE USED BY ANY PERSON OR ENTITY ON OTHER PROJECTS, FOR ADDITIONS TO THIS PROJECT, OR FOR COMPLETION OF THIS PROJECT BY OTHERS WITHOUT THE WRITTEN CONSENT OF CSHQA OR ITS AFFILIATES. Copyright©2013

STAMP
LICENSED ARCHITECT AR 1706
JOHN D. MAULIN STATE OF IDAHO
JULY 12, 2013
ORIGINAL DOCUMENT SIGNED BY ARCHITECT ON FILE WITH THE OWNER
ORIGINAL SIGNED BY: JOHN D. MAULIN
ORIGINAL DATE SIGNED: JULY 12, 2013

CAD FILE NAME: 531-320_A1.5.DWG
XREF FILE NAME: 531-320_30X42TLBK.DWG
531-320_67A2.DWG

DRAWING TITLE: SECOND FLOOR DIMENSION PLAN

PROJECT TITLE: BOISE VAMC BUILDING 67 EXPANSION

DATE: 07/12/2013
PROJECT NO.: 531-320

APPROVED: CHIEF OF FACILITY MANAGEMENT SERVICE
APPROVED: MEDICAL CENTER DIRECTOR

BUILDING NUMBER	CHECKED	DRAWN
67	JDM	TWM

LOCATION: VAMC BOISE, IDAHO

DRAWING NO.: A1.5

DEPARTMENT OF VETERANS AFFAIRS

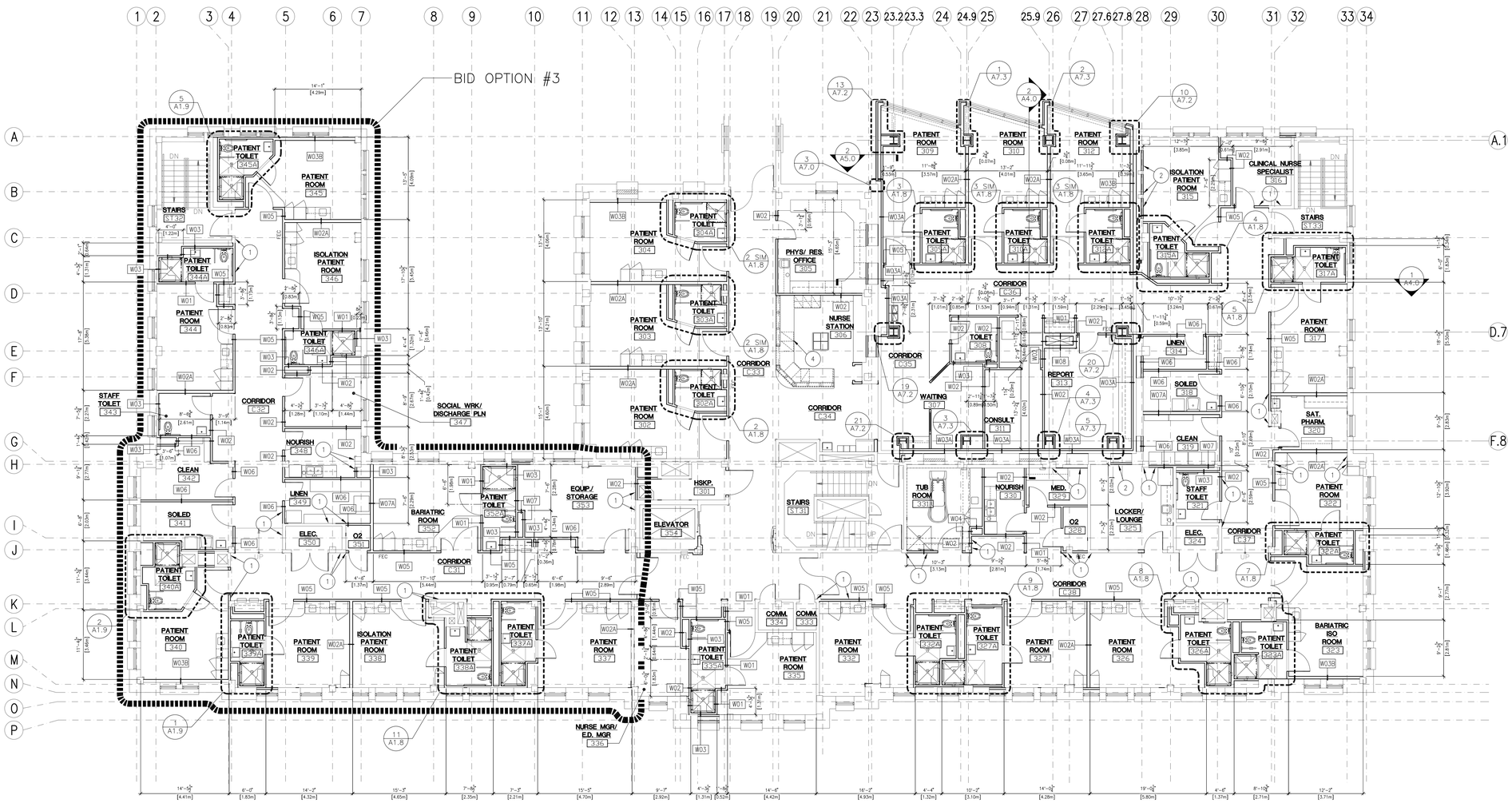

1 THIRD FLOOR DIMENSION PLAN

SCALE: 1/8" = 1'-0"

GENERAL NOTES:

A. PARTITION DIMENSIONS ARE GIVEN TO THE FACE OF STUD UNLESS OTHERWISE NOTED.

B. MASONRY DIMENSIONS ARE GIVEN TO FACE OF MASONRY AND TO THE FACE OF ROUGH OPENINGS.

C. DOOR AND WINDOW OPENING LOCATIONS ARE DIMENSIONED TO ROUGH OPENING OR CENTERLINE OF OPENING. COORDINATE WITH DOOR SCHEDULE AND WINDOW TYPES, SHEETS A6.3 AND A6.4.

D. CONTRACTOR SHALL PROVIDE BLOCKING OR BACKING FOR ALL WALL-MOUNTED AND RECESSED ACCESSORIES AND EQUIPMENT. ASSURE THAT ALL REQUIRED BACKING IS INSTALLED IN WALLS PRIOR TO INSTALLING GYPSUM WALL BOARD. THIS INCLUDES BACKING FOR WALL-MOUNTED DOORSTOPS.

E. ALL GYPSUM WALL BOARD TO BE TYPE 'X'.

F. GYPSUM WALL BOARD SHALL EXTEND FULL HEIGHT OF WALL TO UNDERSIDE OF DECK ABOVE UNLESS OTHERWISE NOTED. SEE WALL TYPES.

G. UTILIZE MOISTURE RESISTANT GYPSUM WALL BOARD ON ALL WALLS AT: BATHS, SPA AND TOILETS.

H. PENETRATIONS THROUGH RATED ASSEMBLIES SHALL BE FIRE STOPPED IN ACCORDANCE WITH NFPA STANDARDS.

I. PROVIDE MOISTURE RESISTANT GYPSUM WALLBOARD AT WALLS IN ROOMS EXPOSED TO MOISTURE. INCLUDING BUT NOT LIMITED TO RESTROOMS, PLUMBING WALLS WITH SINKS, HOUSEKEEPING, LAUNDRY, SOILED, BATHROOMS AND SIMILAR LOCATIONS. PROVIDE CEMENT BOARD BEHIND TILE FINISHES AND AT SHOWERS.

WALL TYPES:

W01	NON-RATED PARTITION 16mm (5/8") GYPSUM WALL BOARD EACH SIDE OF 92mm (3 5/8") METAL STUDS (U.O.N) @ 406mm (16") O.C. TO 150mm (6") ABOVE CEILING (U.O.N.); BRACE AT 1219mm (48") O.C. ALTERNATING TO STRUCTURE ABOVE.
W02	NON-RATED SOUND WALL 16mm (5/8") GYPSUM WALL BOARD EACH SIDE OF 92mm (3 5/8") METAL STUDS (U.O.N.) @ 406mm (16") O.C.; EXTEND TO DECK ABOVE; TAPE JOINTS ABOVE CEILING. PROVIDE SOUND BATT INSULATION FROM FINISH FLOOR TO DECK ABOVE. PROVIDE ACOUSTICAL SEALANT AT ALL WALL PENETRATION.
W02A	NON-RATED SOUND WALL SAME AS W02 EXCEPT WITH 150mm (6") METAL STUDS
W03	NON-RATED CHASE WALL 16mm (5/8") GYPSUM WALL BOARD ON ONE SIDE OF 92mm (3 5/8") METAL STUDS (U.O.N) @ 406mm (16") O.C. TO 150mm (6") ABOVE CEILING (U.O.N.); BRACE AT 1219mm (48") O.C. ALTERNATING TO STRUCTURE ABOVE.
W03A	NON-RATED CHASE WALL 16mm (5/8") GYPSUM WALL BOARD ON ONE SIDE OF 92mm (3 5/8") METAL STUDS (U.O.N) @ 406mm (16") O.C.; EXTEND TO DECK ABOVE; TAPE JOINTS ABOVE CEILING. CONTRACTORS OPTION TO BRACE OFF OF ADJACENT WALL.
W03B	NON-RATED CHASE WALL SAME AS W03 EXCEPT WITH 150mm (6") METAL STUDS.
W03C	NON-RATED CHASE WALL SAME AS W03A EXCEPT WITH 150mm (6") METAL STUDS, R19 BATT INSULATION AND VAPOR BARRIER ON INSIDE.
W03D	NON-RATED CHASE WALL SAME AS W03A EXCEPT PROVIDE SOUND BATT INSULATION FROM FINISH FLOOR TO DECK ABOVE. PROVIDE ACOUSTICAL SEALANT AT ALL WALL PENETRATIONS.
W04	NON-RATED WALL FURRING @ RATED COLUMN 16mm (5/8") GYPSUM WALL BOARD ON ONE SIDE OF 63.5mm (2 1/2") METAL STUDS (U.O.N) @ 406mm (16") O.C. TO 150mm (6") ABOVE CEILING (U.O.N.); WHERE NOT IN ALIGNMENT WITH ADJACENT WALL, HOLD TIGHT TO COLUMN FIREPROOFING (U.O.N); BRACE AT 1219mm (48") O.C. ALTERNATING TO STRUCTURE ABOVE.
W04A	NON-RATED WALL FURRING @ RATED COLUMN 16mm (5/8") GYPSUM WALL BOARD ON ONE SIDE OF 63.5mm (2 1/2") METAL STUDS (U.O.N) @ 406mm (16") O.C.; EXTEND TO DECK ABOVE; TAPE JOINTS ABOVE CEILING. WHERE NOT IN ALIGNMENT WITH ADJACENT WALL, HOLD TIGHT TO COLUMN FIREPROOFING (U.O.N).
W05	NON-RATED SOUND WALL 16mm (5/8") GYPSUM WALL BOARD EACH SIDE OF 101mm (4") METAL STUDS (U.O.N.) @ 406mm (16") O.C.; EXTEND TO DECK ABOVE; TAPE JOINTS ABOVE CEILING. GYPSUM TO EXTEND TO DECK ABOVE ON CORRIDOR SIDE AND 6" ABOVE CEILING ON PATIENT ROOM SIDE. PROVIDE SOUND BATT INSULATION FROM FINISH FLOOR TO DECK ABOVE. PROVIDE ACOUSTICAL SEALANT AT ALL WALL PENETRATIONS.
W06	1-HOUR RATED WALL (GA. FILE NO. WP 1072) 16mm (5/8") GYPSUM WALL BOARD EACH SIDE OF 92mm (3 5/8") METAL STUDS @ 406mm (16") O.C.; EXTEND TO DECK ABOVE; FIRE TAPE JOINTS ABOVE CEILING; FIRESAFE JOINTS.
W07	1-HOUR RATED SOUND WALL (GA. FILE NO. WP 1072) 16mm (5/8") GYPSUM WALL BOARD EACH SIDE OF 92mm (3 5/8") METAL STUDS @ 406mm (16") O.C.; EXTEND TO DECK ABOVE; FIRE TAPE JOINTS ABOVE CEILING; FIRESAFE JOINTS. PROVIDE SOUND BATT INSULATION FROM FINISH FLOOR TO DECK ABOVE. PROVIDE ACOUSTICAL SEALANT AT ALL WALL PENETRATIONS.
W07A	1-HOUR RATED SOUND WALL (GA. FILE NO. WP 1072) SAME AS W07 EXCEPT WITH 150mm (6") METAL STUDS. PROVIDE ACOUSTICAL SEALANT AT ALL WALL PENETRATIONS.
W08	2-HOUR RATED SHAFT WALL (UL DESIGN U415) 25mm (1") SHAFT WALL LINER AND 16mm (2) LAYERS (5/8") GYPSUM WALL BOARD; 89mm (3 1/2") METAL C-H STUDS @ 610mm (24") O.C.; EXTEND TO UNDERSIDE OF DECK ABOVE; FIRE TAPE JOINTS ABOVE CEILING; FIRESAFE JOINTS.
W09	2-HOUR RATED WALL (UL DESIGN U419) 2 LAYERS 16mm (5/8") GYPSUM WALL BOARD EACH SIDE OF 92mm (3 5/8") METAL STUDS @ 406mm (16") O.C.; EXTEND TO DECK ABOVE; FIRE TAPE JOINTS ABOVE CEILING; FIRESAFE JOINTS.

NOTES:

1) REFER TO SHEET A7.1 FOR DETAILS ON LATERAL BRACING OF WALLS, NON-RATED SLIP TRACKS, AND RATED WALL TERMINATIONS.

2) PROVIDE IMPACT RESISTANT GYPSUM BOARD ON ALL WALLS IN ROOMS: 206, 206A, 207, 207A, 208, 208A, 209, 209A, 215, 215A, 217, 217A, 218, 218A, 220, AND 220A

SHEET NOTES:

1. ALIGN FINISH FACE OF NEW CONSTRUCTION WITH EXISTING FINISH FACE OF ADJACENT CONSTRUCTION.
2. NEW FINISH FACE OF WALL TO ALIGN FLUSH W/ ADJACENT FINISH FACE OF WALL.
3. PATCH WALL.
4. REFER TO A1.9-8 FOR DIMENSIONS OF NURSE STATION 306 MILLWORK.

REVISIONS | DATE

CSHQA

C.W. MOORE PLAZA
250 S. 5TH ST. BOISE, ID 83702
(208) 343-4635 FAX (208) 343-1858
http://www.cshqa.com

JOHN D. MAULIN, ARCHITECT
C.W. MOORE PLAZA
250 S. 5TH ST
BOISE, IDAHO
PHONE: 208-343-4635 FAX: 208-343-1858

THESE DRAWINGS AND SPECIFICATIONS, AS INSTRUMENTS OF SERVICE, ARE AND SHALL REMAIN THE PROPERTY OF THE ARCHITECT / ENGINEER WHETHER THE PROJECT FOR WHICH THEY ARE MADE IS EXECUTED OR NOT. THESE DRAWINGS AND SPECIFICATIONS SHALL NOT BE USED BY ANY PERSON OR ENTITY ON OTHER PROJECTS, FOR ADDITIONS TO THIS PROJECT, OR COMPLETION OF THIS PROJECT WHEN PHASED WITHOUT THE WRITTEN CONSENT OF CSHQA OR ITS AFFILIATES. Copyright©2013

STAMP
LICENSED ARCHITECT AR.1706
JOHN D. MAULIN STATE OF IDAHO
JULY 12, 2013
ORIGINAL DOCUMENT SIGNED BY ARCHITECT ON FILE WITH THE OWNER ORIGINAL SIGNED BY: JOHN D. MAULIN ORIGINAL DATE SIGNED: JULY 12, 2013

CAD FILE NAME:
531-320_A1.6.DWG
XREF FILE NAME:
531-320_30X42TLBK.DWG
531-320_67A3.DWG
531-320_67GRID.DWG
531-320_XWALL TYPES.DWG

DRAWING TITLE: THIRD FLOOR DIMENSION PLAN

APPROVED: CHIEF OF FACILITY MANAGEMENT SERVICE

APPROVED: MEDICAL CENTER DIRECTOR

PROJECT TITLE: BOISE VAMC BUILDING 67 EXPANSION

BUILDING NUMBER: 67
CHECKED: JDM
DRAWN: TWM
LOCATION: VAMC BOISE, IDAHO

DATE: 07/12/2013
PROJECT NO. 531-320
DRAWING NO. A1.6
DWG 22 OF 191

DEPARTMENT OF VETERANS AFFAIRS

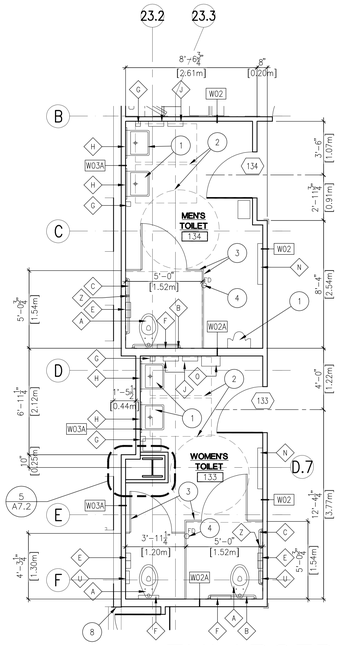

ENLARGED TOILETS– 1 133 & 134

SCALE: 1/4" = 1'–0"

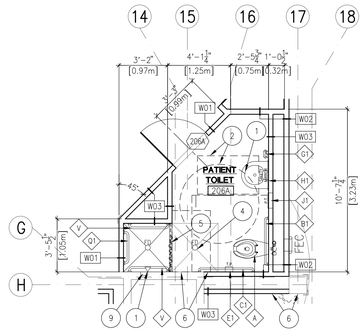

ENLARGED 2 TOILET– 206A

SCALE: 1/4" = 1'–0"

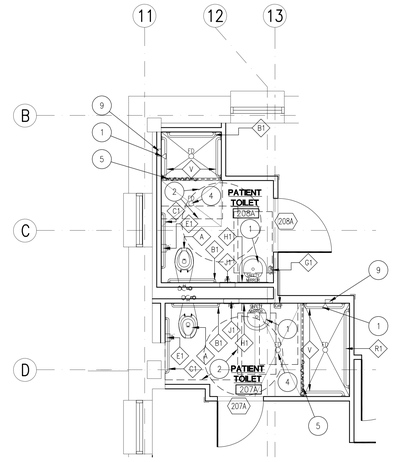

ENLARGED TOILETS– 3 207A & 208A

SCALE: 1/4" = 1'–0"

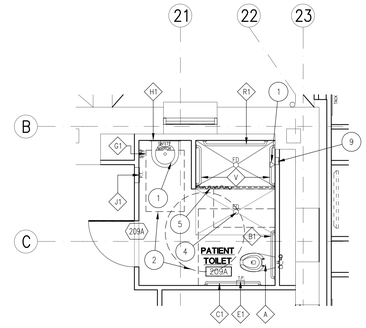

ENLARGED 4 TOILET– 209A

SCALE: 1/4" = 1'–0"

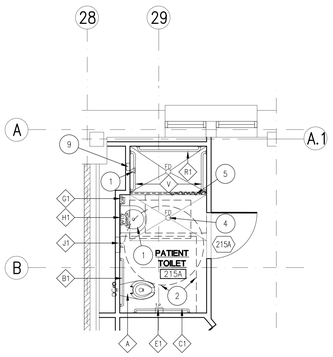

ENLARGED 5 TOILET– 215A

SCALE: 1/4" = 1'–0"

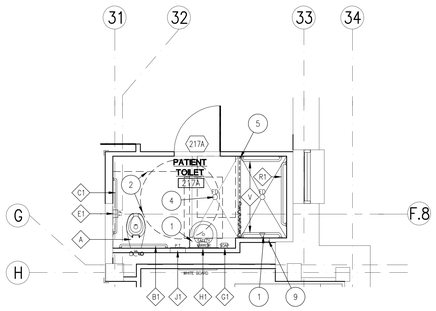

ENLARGED 6 TOILET– 217A

SCALE: 1/4" = 1'–0"

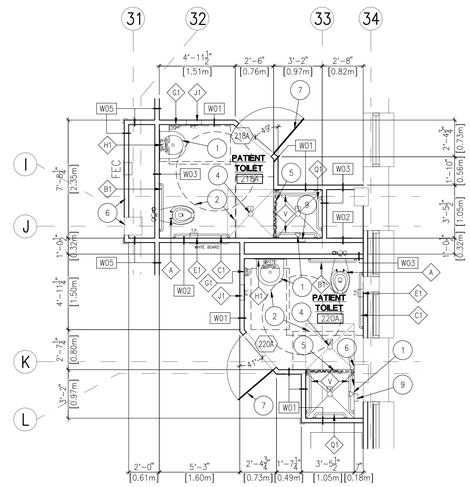

ENLARGED TOILETS– 7 218A & 220A

SCALE: 1/4" = 1'–0"

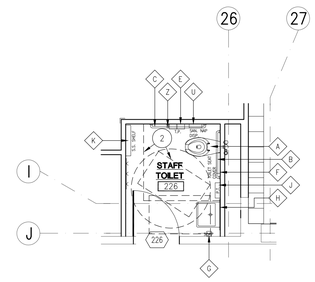

ENLARGED 8 STAFF TOILET– 226

SCALE: 1/4" = 1'–0"

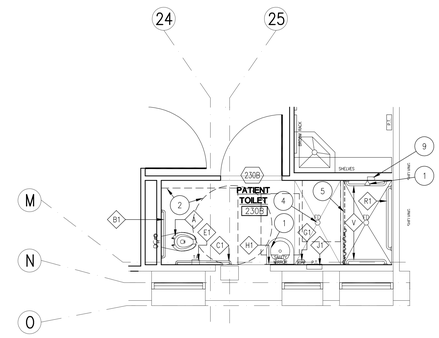

ENLARGED 9 TOILET– 230B

SCALE: 1/4" = 1'–0"

GENERAL NOTES:

A. PARTITION DIMENSIONS ARE GIVEN TO THE FACE OF STUD UNLESS OTHERWISE NOTED.

B. MASONRY DIMENSIONS ARE GIVEN TO FACE OF MASONRY AND TO THE FACE OF ROUGH OPENINGS.

C. DOOR AND WINDOW OPENING LOCATIONS ARE DIMENSIONED TO ROUGH OPENING OR CENTERLINE OF OPENING. COORDINATE WITH DOOR SCHEDULE AND WINDOW TYPES, SHEET A6.3 AND A6.4.

D. CONTRACTOR SHALL PROVIDE BLOCKING OR BACKING FOR ALL WALL MOUNTED AND RECESSED ACCESSORIES AND EQUIPMENT. ASSURE THAT ALL REQUIRED BACKING IS INSTALLED IN WALLS PRIOR TO INSTALLING DRYWALL. THIS INCLUDES BACKING FOR WALL–MOUNTED DOORSTOPS.

E. GYPSUM WALL BOARD SHALL EXTEND FULL HEIGHT OF WALL TO UNDERSIDE OF DECK ABOVE UNLESS OTHERWISE NOTED. SEE WALL TYPES.

F. SEE SHEET A6.1 AND A6.2 FOR ROOM FINISH SCHEDULES.

G. SEE A8.1–1 FOR ACCESSORY MOUNTING HEIGHTS.

H. SOME FURNISHINGS ARE SHOWN FOR COORDINATION.

SHEET NOTES:

1. PLUMBING FIXTURE, RE: PLUMBING DRAWINGS.
2. DASHED LINE INDICATES REQUIRED CLEAR FLOOR SPACE, NO WORK REQUIRED.
3. TOILET PARTITION.
4. FLOOR DRAIN, RE: PLUMBING DRAWINGS.
5. RECESSED CURTAIN TRACK WITH BREAK AWAY HOOKS AND SHOWER CURTAIN.
6. ALIGN FINISH FACE OF NEW CONSTRUCTION WITH FINISH FACE OF EXISTING CONSTRUCTION.
7. CENTER DOOR IN ANGLED WALL.
8. SEISMIC JOINT COVER, RE: A7.1–1 SIMILAR.
9. RECESSED SOAP HOLDER.

ACCESSORY LEGEND:

A. WATER CLOSET, CW/ PLUMBING
B. 36" [.914m] STAINLESS STEEL GRAB BAR
B1. 36" [.914m] STAINLESS STEEL GRAB BAR– SAFETY
C. 42" [1.067m] STAINLESS STEEL GRAB BAR
C1. 42" [1.067m] STAINLESS STEEL GRAB BAR– SAFETY
D. FOLD–UP STAINLESS STEEL GRAB BAR
E. TOILET PAPER DISPENSER (V.C.)
E1. TOILET PAPER DISPENSER– SAFETY
F. SEAT COVER DISPENSER (V.C.)
G. SOAP DISPENSER (V.C.)
G1. SOAP DISPENSER– SAFETY
H. MIRROR– 24"x48" [.610m x 1.219m]
H1. MIRROR– 24"x48" [.610m x 1.219m] SAFETY
H2. MIRROR– 18"x24" [.457m x .610m]
H3. MIRROR– 48"x40" [1.219m x 1.016m]
J. PAPER TOWEL DISPENSER (V.C.)
J1. PAPER TOWEL DISPENSER– RECESSED
K. 24" [.610m] WIDE x 4" [.102m] DEEP STAINLESS STEEL SHELF
L. SEMI–RECESSED FIRE EXTINGUISHER CABINET
L1. RECESSED FIRE EXTINGUISHER CABINET– FLAT TRIM
M. SHELF WITH MOP AND BROOM HOLDERS AND HOOKS
N. SURFACE–MOUNTED BABY CHANGING STATION (V.C.)
O. SEMI–RECESSED SANITARY NAPKIN DISPENSER (V.C.)
P. ROBE HOOK
Q. 24" [.610m] STAINLESS STEEL GRAB BAR
Q1. 24" [.610m] STAINLESS STEEL GRAB BAR– SAFETY
R. 48" [1.219m] STAINLESS STEEL GRAB BAR
R1. 48" [1.219m] STAINLESS STEEL GRAB BAR– SAFETY
S. WALL–MOUNTED FOLD–DOWN SHOWER SEAT
T. STAINLESS STEEL PRIVACY SCREEN
U. SANITARY NAPKIN DISPOSAL (V.C.)
V. 30" [.762m] STAINLESS STEEL GRAB BAR– SAFETY
W. SEMI–RECESSED MEDICINE BOX W/ LIGHT, CW/ELECTRICAL.
X. SHARPS DISPOSAL (V.C.)
Y. 3–BOX GLOVE DISPENSER (V.C.)
Z. 18" STAINLESS STEEL GRAB BAR

REVISIONS | DATE

CSHQA

C.W. MOORE PLAZA
250 S. 5TH ST. BOISE, ID 83702
(208) 343-4635 FAX (208) 343-1858
http://www.cshqa.com

JOHN D. MAULIN, ARCHITECT
C.W. MOORE PLAZA
250 S. 5TH ST
BOISE, IDAHO
PHONE: 208-343-4635 FAX: 208-343-1858

THESE DRAWINGS AND SPECIFICATIONS, AS INSTRUMENTS OF SERVICE, ARE AND SHALL REMAIN THE PROPERTY OF THE ARCHITECT / ENGINEER WHETHER THE PROJECT FOR WHICH THEY ARE MADE IS EXECUTED OR NOT. THESE DRAWINGS AND SPECIFICATIONS SHALL NOT BE USED BY ANY PERSON OR ENTITY ON OTHER PROJECTS, FOR ADDITIONS TO THIS PROJECT, OR COMPLETION OF THIS PROJECT–WHEN PHASED–WITHOUT THE WRITTEN CONSENT OF CSHQA OR ITS AFFILIATES. Copyright©2013

STAMP
LICENSED ARCHITECT AR 1706
JOHN D. MAULIN
STATE OF IDAHO
JULY 12, 2013
ORIGINAL DOCUMENT SIGNED BY ARCHITECT ON FILE WITH THE OWNER
ORIGINAL SIGNED BY: JOHN D. MAULIN
ORIGINAL DATE SIGNED: JULY 12, 2013

CAD FILE NAME:
531–320_A1.7.DWG

XREF FILE NAME:
531–320_30X42TLBK.DWG
531–320_67A1.DWG
531–320_67A2.DWG
531–320_67GRID.DWG
531–320_XFIXT LGND.DWG

DRAWING TITLE: ENLARGED PLANS

APPROVED: CHIEF OF FACILITY MANAGEMENT SERVICE

APPROVED: MEDICAL CENTER DIRECTOR

PROJECT TITLE: BOISE VAMC BUILDING 67 EXPANSION

BUILDING NUMBER: 67 | CHECKED: JDM | DRAWN: TWM

LOCATION: VAMC BOISE, IDAHO

DATE: 07/12/2013

PROJECT NO. 531–320

DRAWING NO. A1.7

DEPARTMENT OF VETERANS AFFAIRS

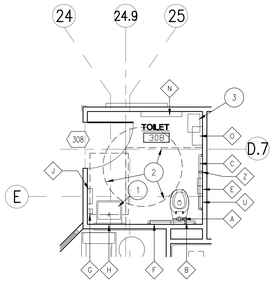

ENLARGED
1 TOILET– 308
SCALE: 1/4" = 1'–0"

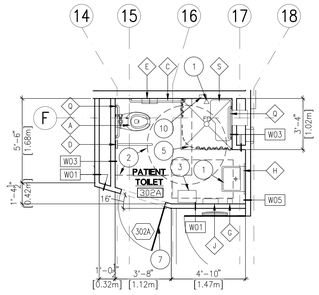

ENLARGED
2 TOILET– 302A
SCALE: 1/4" = 1'–0"

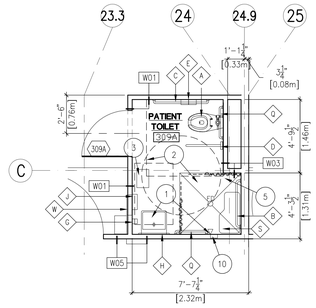

ENLARGED
3 TOILET– 309A
SCALE: 1/4" = 1'–0"

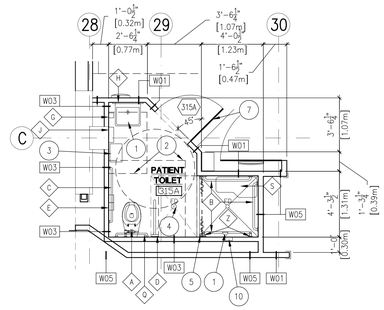

ENLARGED
4 TOILET– 315A
SCALE: 1/4" = 1'–0"

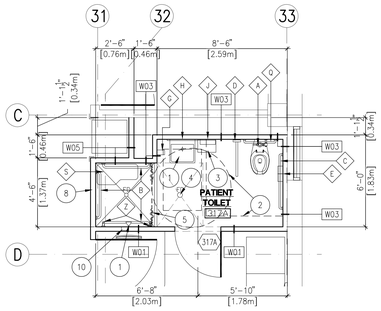

ENLARGED
5 TOILET– 317A
SCALE: 1/4" = 1'–0"

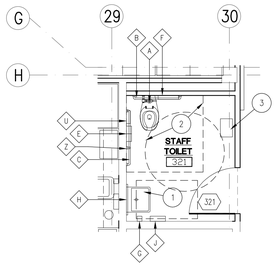

ENLARGED STAFF
6 TOILET–321
SCALE: 1/4" = 1'–0"

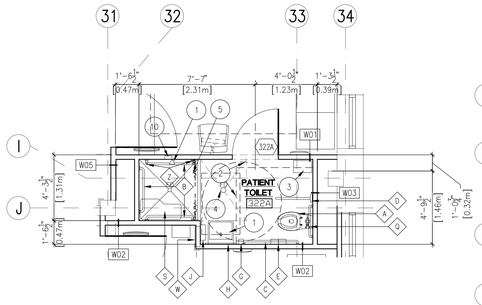

ENLARGED
7 TOILET– 322A
SCALE: 1/4" = 1'–0"

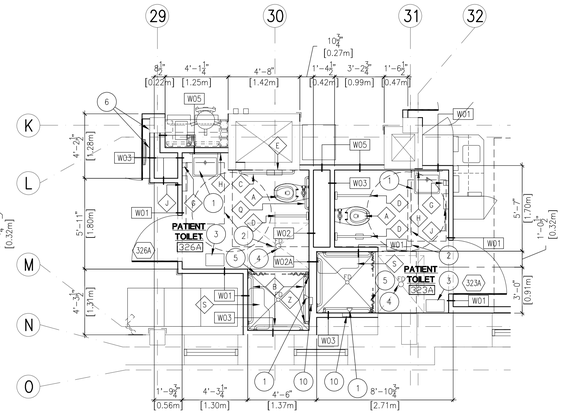

ENLARGED TOILET–
8 323A & 326A
SCALE: 1/4" = 1'–0"

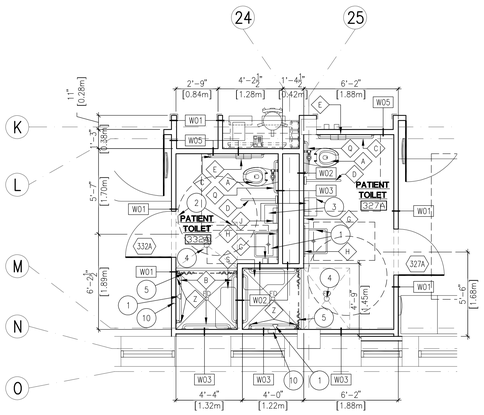

ENLARGED TOILET–
9 327A & 332A
SCALE: 1/4" = 1'–0"

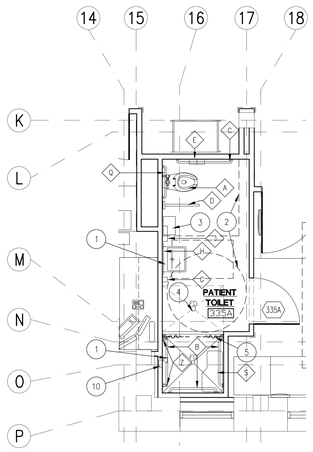

ENLARGED
10 TOILET– 335A
SCALE: 1/4" = 1'–0"

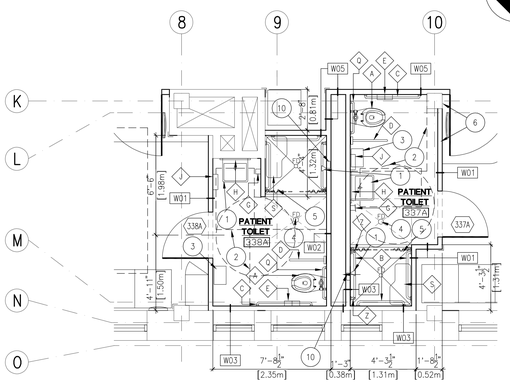

ENLARGED TOILET–
11 337A & 338A
SCALE: 1/4" = 1'–0"

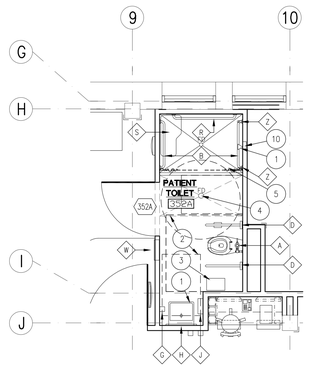

ENLARGED
12 TOILET– 352A
SCALE: 1/4" = 1'–0"

GENERAL NOTES:

A. PARTITION DIMENSIONS ARE GIVEN TO THE FACE OF STUD UNLESS OTHERWISE NOTED.

B. MASONRY DIMENSIONS ARE GIVEN TO FACE OF MASONRY AND TO THE FACE OF ROUGH OPENINGS.

C. DOOR AND WINDOW OPENING LOCATIONS ARE DIMENSIONED TO ROUGH OPENING OR CENTERLINE OF OPENING. COORDINATE WITH DOOR SCHEDULE AND WINDOW TYPES, SHEET A6.3 AND A6.4.

D. CONTRACTOR SHALL PROVIDE BLOCKING OR BACKING FOR ALL WALL MOUNTED AND RECESSED ACCESSORIES AND EQUIPMENT. ASSURE THAT ALL REQUIRED BACKING IS INSTALLED IN WALLS PRIOR TO INSTALLING DRYWALL. THIS INCLUDES BACKING FOR WALL–MOUNTED DOORSTOPS.

E. GYPSUM WALL BOARD SHALL EXTEND FULL HEIGHT OF WALL TO UNDERSIDE OF DECK ABOVE UNLESS OTHERWISE NOTED. SEE WALL TYPES.

F. SEE SHEET A6.1 AND A6.2 FOR ROOM FINISH SCHEDULES.

G. SEE A8.1–1 FOR ACCESSORY MOUNTING HEIGHTS.

H. SOME FURNISHINGS ARE SHOWN FOR COORDINATION.

SHEET NOTES:

1. PLUMBING FIXTURE, RE: PLUMBING DRAWINGS.
2. DASHED LINE INDICATES REQUIRED CLEAR FLOOR SPACE, NO WORK REQUIRED.
3. EQUIPMENT/FURNITURE, RE: EQUIPMENT/FURNITURE PLANS.
4. FLOOR DRAIN, RE: PLUMBING DRAWINGS.
5. SURFACE MOUNTED CURTAIN TRACK AND SHOWER CURTAIN, BOTH SIDES OF PATIENT LIFT TRACK ABOVE. RE: REFLECTED CEILING PLANS.
6. ALIGN FINISH FACE OF NEW CONSTRUCTION WITH FINISH FACE OF EXISTING CONSTRUCTION.
7. CENTER DOOR IN ANGLED WALL.
8. WALL CONSTRUCTION TO BE FULL HEIGHT SOUND RATED WALL THAT MATCHES THE WIDTH OF EXISTING CORRIDOR WALL CONSTRUCTION.
9. NO NOTE PROVIDED.
10. RECESSED SOAP HOLDER.

ACCESSORY LEGEND:

A. WATER CLOSET, CW/ PLUMBING
B. 36" [.914m] STAINLESS STEEL GRAB BAR
B1. 36" [.914m] STAINLESS STEEL GRAB BAR– SAFETY
C. 42" [1.067m] STAINLESS STEEL GRAB BAR
C1. 42" [1.067m] STAINLESS STEEL GRAB BAR– SAFETY
D. FOLD–UP STAINLESS STEEL GRAB BAR
E. TOILET PAPER DISPENSER (V.C.)
E1. TOILET PAPER DISPENSER– SAFETY
F. SEAT COVER DISPENSER (V.C.)
G. SOAP DISPENSER (V.C.)
G1. SOAP DISPENSER– SAFETY
H. MIRROR– 24"x48" [.610m x 1.219m]
H1. MIRROR– 24"x48" [.610m x 1.219m] SAFETY
H2. MIRROR– 18"x24" [.457m x .610m]
H3. MIRROR– 48"x40" [1.219m x 1.016m]
J. PAPER TOWEL DISPENSER (V.C.)
J1. PAPER TOWEL DISPENSER– RECESSED
K. 24" [.610m] WIDE x 4" [.102m] DEEP STAINLESS STEEL SHELF
L. SEMI–RECESSED FIRE EXTINGUISHER CABINET
L1. RECESSED FIRE EXTINGUISHER CABINET– FLAT TRIM
M. SHELF WITH MOP AND BROOM HOLDERS AND HOOKS
N. SURFACE–MOUNTED BABY CHANGING STATION (V.C.)
O. SEMI–RECESSED SANITARY NAPKIN DISPENSER (V.C.)
P. ROBE HOOK
Q. 24" [.610m] STAINLESS STEEL GRAB BAR
Q1. 24" [.610m] STAINLESS STEEL GRAB BAR– SAFETY
R. 48" [1.219m] STAINLESS STEEL GRAB BAR
R1. 48" [1.219m] STAINLESS STEEL GRAB BAR– SAFETY
S. WALL–MOUNTED FOLD–DOWN SHOWER SEAT
T. STAINLESS STEEL PRIVACY SCREEN
U. SANITARY NAPKIN DISPOSAL (V.C.)
V. 30" [.762m] STAINLESS STEEL GRAB BAR– SAFETY
W. SEMI–RECESSED MEDICINE BOX W/ LIGHT, CW/ELECTRICAL.
X. SHARPS DISPOSAL (V.C.)
Y. 3–BOX GLOVE DISPENSER (V.C.)
Z. 18" STAINLESS STEEL GRAB BAR

REVISIONS | DATE

CSHQA
C.W. MOORE PLAZA
250 S. 5TH ST. BOISE, ID 83702
(208) 343-4635 FAX (208) 343-1858
http://www.cshqa.com

JOHN D. MAULIN, ARCHITECT
C.W. MOORE PLAZA
250 S. 5TH ST
BOISE, IDAHO
PHONE: 208-343-4635 FAX: 208-343-1858

THESE DRAWINGS AND SPECIFICATIONS, AS INSTRUMENTS OF SERVICE, ARE AND SHALL REMAIN THE PROPERTY OF THE ARCHITECT / ENGINEER WHETHER THE PROJECT FOR WHICH THEY ARE MADE IS EXECUTED OR NOT. THESE DRAWINGS AND SPECIFICATIONS SHALL NOT BE USED BY ANY PERSON OR ENTITY ON OTHER PROJECTS, FOR ADDITIONS TO THIS PROJECT, OR COMPLETION OF THIS PROJECT–WHEN PHASED–WITHOUT THE WRITTEN CONSENT OF CSHQA OR ITS AFFILIATES. Copyright©2013

STAMP
LICENSED ARCHITECT AR 1106
JOHN D. MAULIN STATE OF IDAHO
JULY 12, 2013

ORIGINAL DOCUMENT SIGNED BY ARCHITECT ON FILE WITH THE OWNER
ORIGINAL SIGNED BY: JOHN D. MAULIN
ORIGINAL DATE SIGNED: JULY 12, 2013

CAD FILE NAME: 531–320_A1.8.DWG
XREF FILE NAME: 531–320_30X42TLBK.DWG
531–320_67A3.DWG
531–320_67GRID.DWG
531–320_XFIXT LGND.DWG

DRAWING TITLE: ENLARGED PLANS
APPROVED: CHIEF OF FACILITY MANAGEMENT SERVICE
APPROVED: MEDICAL CENTER DIRECTOR

PROJECT TITLE: BOISE VAMC BUILDING 67 EXPANSION
BUILDING NUMBER: 67 | CHECKED: JDM | DRAWN: TWM
LOCATION: VAMC BOISE, IDAHO

DATE: 07/12/2013
PROJECT NO: 531–320
DRAWING NO: A1.8
DWG 24 OF 191

DEPARTMENT OF VETERANS AFFAIRS

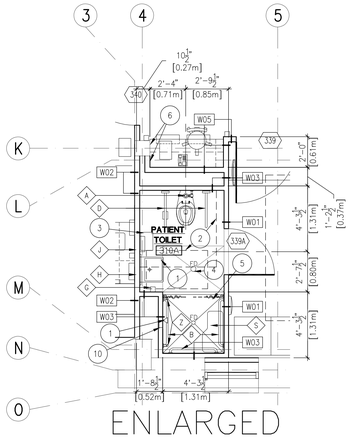

ENLARGED
1 TOILET– 339A
SCALE: 1/4" = 1'–0"

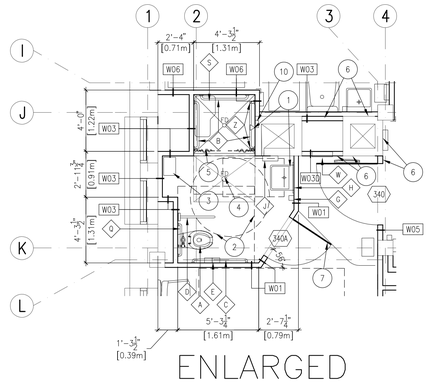

ENLARGED
2 TOILET–340A
SCALE: 1/4" = 1'–0"

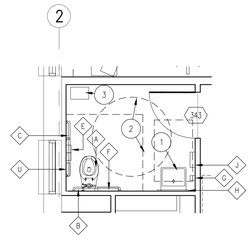

ENLARGED STAFF
3 TOILET–343
SCALE: 1/4" = 1'–0"

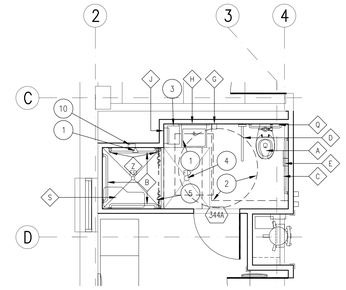

ENLARGED
4 TOILET–344A
SCALE: 1/4" = 1'–0"

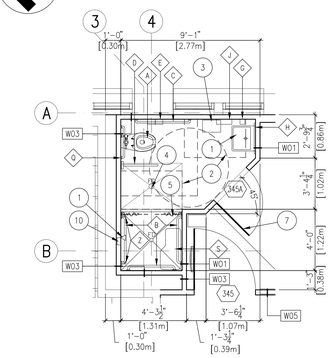

ENLARGED
5 TOILET–345A
SCALE: 1/4" = 1'–0"

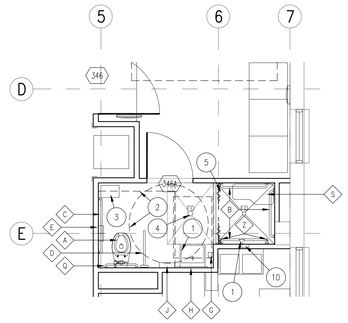

ENLARGED
6 TOILET–346A
SCALE: 1/4" = 1'–0"

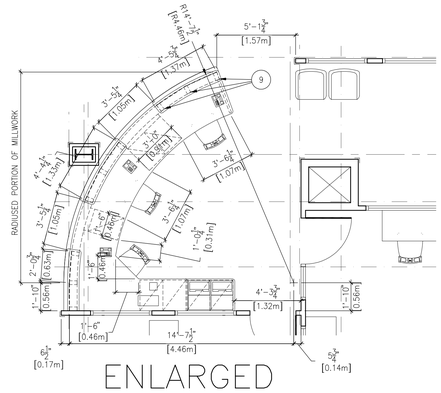

ENLARGED
7 NURSE STATION–204
SCALE: 1/4" = 1'–0"

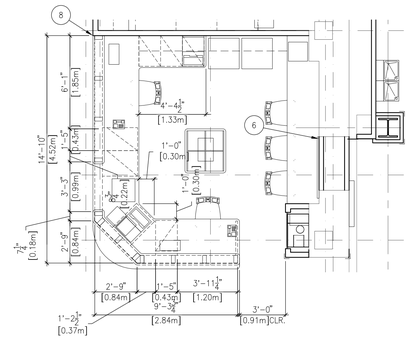

ENLARGED
8 NURSE STATION–306
SCALE: 1/4" = 1'–0"

GENERAL NOTES:

A. PARTITION DIMENSIONS ARE GIVEN TO THE FACE OF STUD UNLESS OTHERWISE NOTED.

B. MASONRY DIMENSIONS ARE GIVEN TO FACE OF MASONRY AND TO THE FACE OF ROUGH OPENINGS.

C. DOOR AND WINDOW OPENING LOCATIONS ARE DIMENSIONED TO ROUGH OPENING OR CENTERLINE OF OPENING. COORDINATE WITH DOOR SCHEDULE AND WINDOW TYPES, SHEET A6.3 AND A6.4.

D. CONTRACTOR SHALL PROVIDE BLOCKING OR BACKING FOR ALL WALL MOUNTED AND RECESSED ACCESSORIES AND EQUIPMENT. ASSURE THAT ALL REQUIRED BACKING IS INSTALLED IN WALLS PRIOR TO INSTALLING DRYWALL. THIS INCLUDES BACKING FOR WALL–MOUNTED DOORSTOPS.

E. GYPSUM WALL BOARD SHALL EXTEND FULL HEIGHT OF WALL TO UNDERSIDE OF DECK ABOVE UNLESS OTHERWISE NOTED. SEE WALL TYPES.

F. SEE SHEET A6.1 AND A6.2 FOR ROOM FINISH SCHEDULES.

G. SEE A8.1–1 FOR ACCESSORY MOUNTING HEIGHTS.

H. SOME FURNISHINGS ARE SHOWN FOR COORDINATION.

SHEET NOTES:

1. PLUMBING FIXTURE, RE: PLUMBING DRAWINGS.
2. DASHED LINE INDICATES REQUIRED CLEAR FLOOR SPACE, NO WORK REQUIRED.
3. EQUIPMENT/FURNITURE, RE: EQUIPMENT/FURNITURE PLANS.
4. FLOOR DRAIN, RE: PLUMBING DRAWINGS.
5. SURFACE MOUNTED CURTAIN TRACK AND SHOWER CURTAIN, BOTH SIDES OF PATIENT LIFT TRACK ABOVE. RE: REFLECTED CEILING PLANS.
6. ALIGN FINISH FACE OF EXISTING CONSTRUCTION WITH FINISH FACE OF EXISTING CONSTRUCTION.
7. CENTER DOOR IN ANGLED WALL.
8. FACE OF TRANSACTION COUNTER TO BE FLUSH WITH FACE OF ADJACENT WALL.
9. STAINLESS STEEL COUNTER SUPPORTS, (3) PER TRANSACTION COUNTER, EQUALLY SPACED.
10. RECESSED SOAP HOLDER.

ACCESSORY LEGEND:

A. WATER CLOSET, CW/ PLUMBING
B. 36" [.914m] STAINLESS STEEL GRAB BAR
B1. 36" [.914m] STAINLESS STEEL GRAB BAR– SAFETY
C. 42" [1.067m] STAINLESS STEEL GRAB BAR
C1. 42" [1.067m] STAINLESS STEEL GRAB BAR– SAFETY
D. FOLD–UP STAINLESS STEEL GRAB BAR
E. TOILET PAPER DISPENSER (V.C.)
E1. TOILET PAPER DISPENSER– SAFETY
F. SEAT COVER DISPENSER (V.C.)
G. SOAP DISPENSER (V.C.)
G1. SOAP DISPENSER– SAFETY
H. MIRROR– 24"x48" [.610m x 1.219m]
H1. MIRROR– 24"x48" [.610m x 1.219m] SAFETY
H2. MIRROR– 18"x24" [.457m x .610m]
H3. MIRROR– 48"x40" [1.219m x 1.016m]
J. PAPER TOWEL DISPENSER (V.C.)
J1. PAPER TOWEL DISPENSER– RECESSED
K. 24" [.610m] WIDE x 4" [.102m] DEEP STAINLESS STEEL SHELF
L. SEMI–RECESSED FIRE EXTINGUISHER CABINET
L1. RECESSED FIRE EXTINGUISHER CABINET– FLAT TRIM
M. SHELF WITH MOP AND BROOM HOLDERS AND HOOKS
N. SURFACE–MOUNTED BABY CHANGING STATION (V.C.)
O. SEMI–RECESSED SANITARY NAPKIN DISPENSER (V.C.)
P. ROBE HOOK
Q. 24" [.610m] STAINLESS STEEL GRAB BAR
Q1. 24" [.610m] STAINLESS STEEL GRAB BAR– SAFETY
R. 48" [1.219m] STAINLESS STEEL GRAB BAR
R1. 48" [1.219m] STAINLESS STEEL GRAB BAR– SAFETY
S. WALL–MOUNTED FOLD–DOWN SHOWER SEAT
T. STAINLESS STEEL PRIVACY SCREEN
U. SANITARY NAPKIN DISPOSAL (V.C.)
V. 30" [.762m] STAINLESS STEEL GRAB BAR– SAFETY
W. SEMI–RECESSED MEDICINE BOX W/ LIGHT, CW/ELECTRICAL.
X. SHARPS DISPOSAL (V.C.)
Y. 3–BOX GLOVE DISPENSER (V.C.)
Z. 18" STAINLESS STEEL GRAB BAR

REVISIONS | DATE

CSHQA
C.W. MOORE PLAZA
250 S. 5TH ST. BOISE, ID 83702
(208) 343-4635 FAX (208) 343-1858
http://www.cshqa.com

JOHN D. MAULIN, ARCHITECT
C.W. MOORE PLAZA
250 S. 5TH ST
BOISE, IDAHO
PHONE: 208-343-4635 FAX: 208-343-1858

THESE DRAWINGS AND SPECIFICATIONS, AS INSTRUMENTS OF SERVICE, ARE AND SHALL REMAIN THE PROPERTY OF THE ARCHITECT / ENGINEER WHETHER THE PROJECT FOR WHICH THEY ARE MADE IS EXECUTED OR NOT. THESE DRAWINGS AND SPECIFICATIONS ARE NOT TO BE USED BY ANY PERSON OR ENTITY ON OTHER PROJECTS, FOR ADDITIONS TO THIS PROJECT, OR COMPLETION OF THIS PROJECT–WHEN PHASED–WITHOUT THE WRITTEN CONSENT OF CSHQA OR ITS AFFILIATES. Copyright©2013

STAMP
LICENSED ARCHITECT AR.1706
JOHN D. MAULIN STATE OF IDAHO
JULY 12, 2013
ORIGINAL DOCUMENT SIGNED BY ARCHITECT ON FILE WITH THE OWNER
ORIGINAL SIGNED BY: JOHN D. MAULIN
ORIGINAL DATE SIGNED: JULY 12, 2013

CAD FILE NAME: 531–320_A1.9.DWG
XREF FILE NAME: 531–320_30X42TLBK.DWG
531–320_67A3.DWG
531–320_67GRID.DWG
531–320_XFIXT LGND.DWG

DRAWING TITLE: ENLARGED PLANS
APPROVED: CHIEF OF FACILITY MANAGEMENT SERVICE
APPROVED: MEDICAL CENTER DIRECTOR

PROJECT TITLE: BOISE VAMC BUILDING 67 EXPANSION
BUILDING NUMBER: 67
CHECKED: JDM
DRAWN: TWM
LOCATION: VAMC BOISE, IDAHO

DATE: 07/12/2013
PROJECT NO. 531–320
DRAWING NO. A1.9
DWG 25 OF 191

DEPARTMENT OF VETERANS AFFAIRS