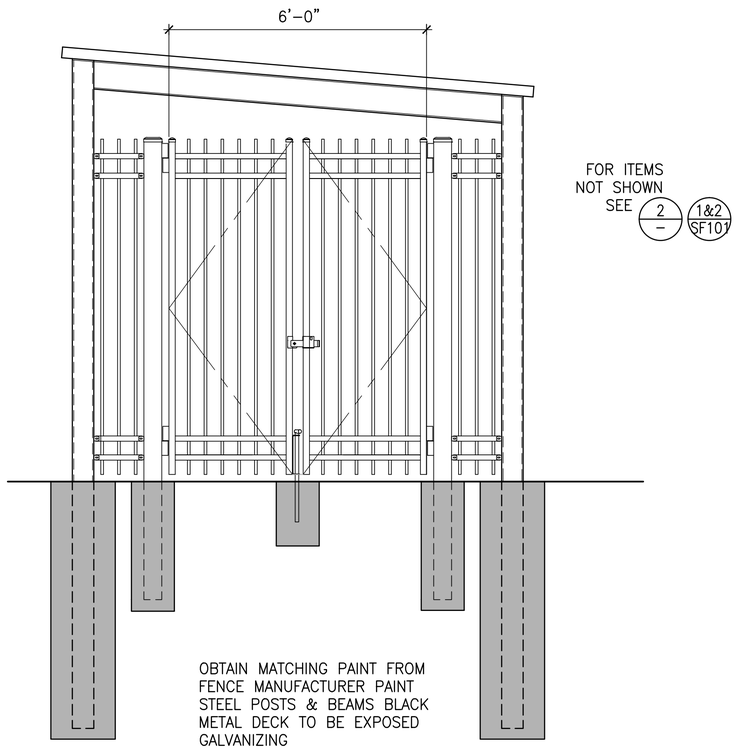

3 GENERATOR GATE – ELEVATION
1/2"=1'-0"

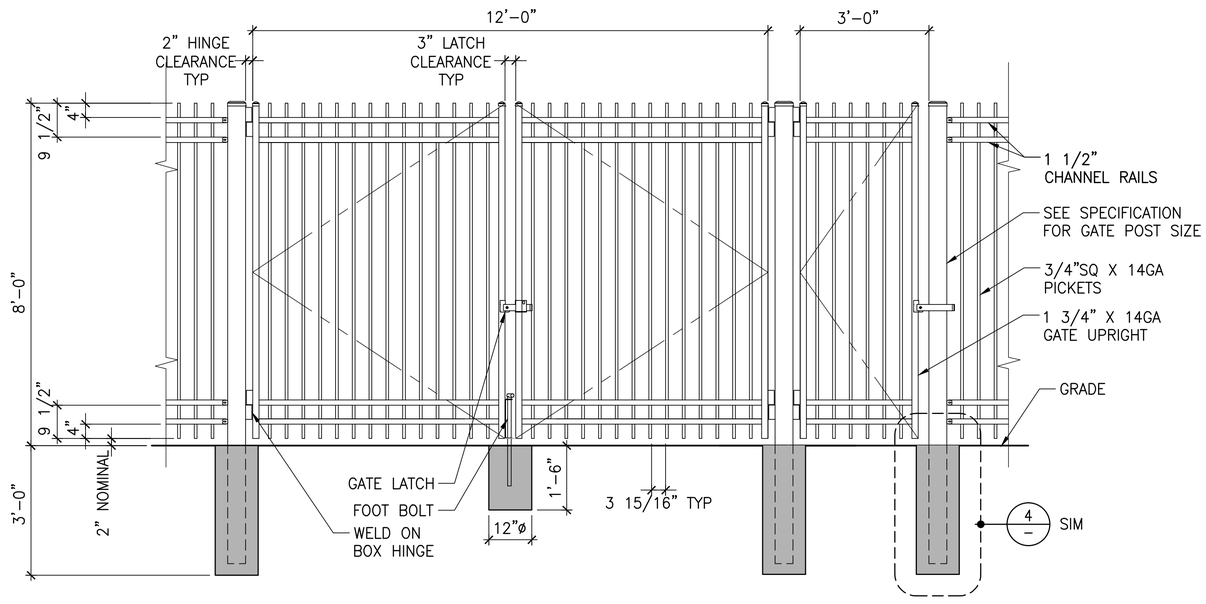

2 TYPICAL GATE – ELEVATION
1/2"=1'-0"

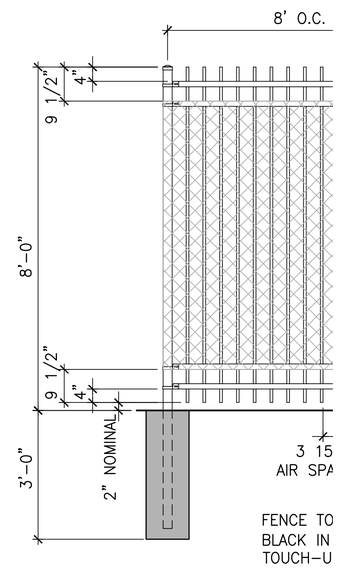

1 TYPICAL FENCE –

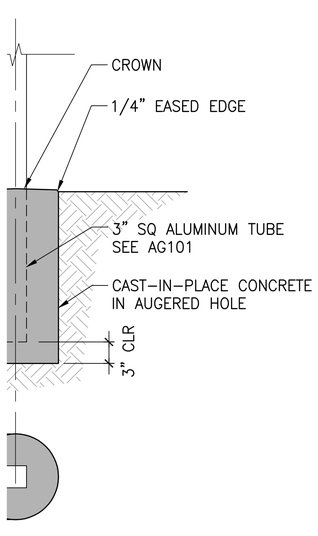

OUNDATION
1"=1'-0"

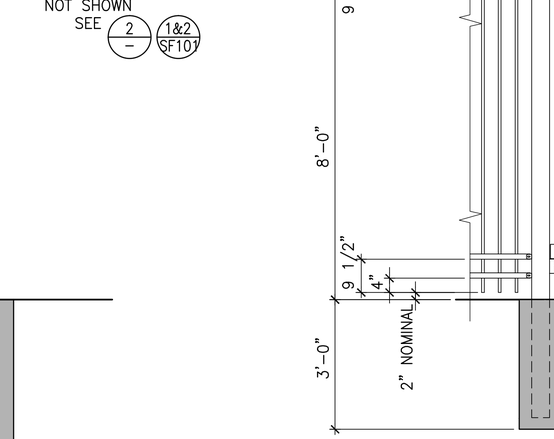

8 TYPICAL CONCRETE PAVING
1"=1'-0"

6 TYPICAL ASPHALT PAVING
1"=1'-0"

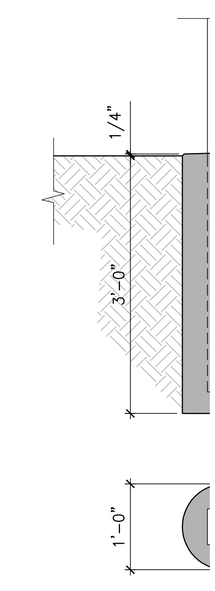

4 TYPICAL FENCE PO

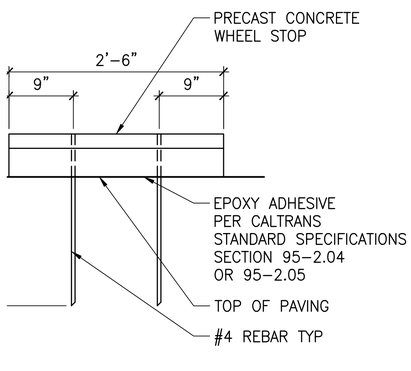

DP
1"=1'-0"

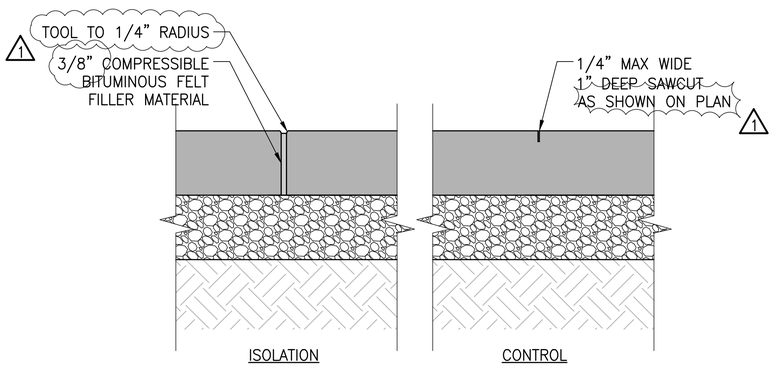

9 PAVEMENT JOINTS
1 1/2"=1'-0"

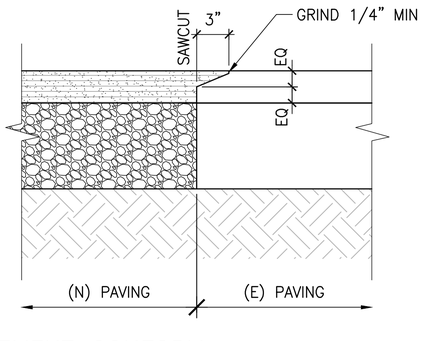

7 PAVEMENT CONFORM
1 1/2"=1'-0"

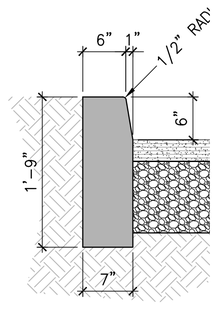

5 TYPICAL VERTICAL

100% C

1/14	
19/14	
28/14	

CONSULTANTS:

Stamp and Signature

ARCHITECT/ENGINEERS:

KPA
THE KPA GROUP

ENGINEERS ARCHITECTS
ONE KAISER PLAZA SUITE 445
OAKLAND CALIFORNIA 94612
TEL 510.271.6701 FAX 510.271.6707

©THE KPA GROUP 2013
KPA Project No. 575.00

Drawing Title
CONSTRUCTION DETAILS I

Approved: Project Director
–
–
VAPAHCS PLANNING AND ENGINEERING

Project Title
EMERGENCY STORAGE RELOCATION

Location
3801 MIRANDA AVENUE, PALO AL

Date	Checked	Dra
02/28/2014	PWP	KF