ABBREVIATIONS

1PH	SINGLE-PHASE
1P	SINGLE POLE
2/C	TWO-CONDUCTOR
3/C	THREE-CONDUCTOR
3PH	THREE-PHASE
4/C	FOUR-CONDUCTOR
4W	FOUR-WIRE
A/C UNIT	AIR CONDITIONING UNIT
A/E	ARCHITECT/ENGINEER
AAP	ALARM ANNUNCIATOR PANEL
AC	ALTERNATING CURRENT OR ARMORED CABLE
ACC	ACCESSIBLE
ADDL	ADDITIONAL
ADJ	ADJACENT, ADJOINING
ADO	AUTOMATIC DOOR OPENER
AFC	AMPERE FRAME OR AMP FUSE ABOVE FINISHED COUNTER, AUTOMATIC FREQUENCY CONTROL, OR AVAILABLE FAULT CURRENT
AFF	ABOVE FINISHED FLOOR
AFG	ABOVE FINISHED GRADE
AH	AMPERE HOUR
AHJ	AUTHORITY HAVING JURISDICTION
AIC	AMPERE INTERRUPTING CAPACITY
ALT	ALTERNATE
AMB OR A	AMBIENT
AMP	AMPERE
ARCH	ARCHITECT
ASC	AMPS SHORT CIRCUIT
AT	AMPERE TRIP
ATS	AUTOMATIC TRANSFER SWITCH
AUTO	AUTOMATIC
AV	AUDIO VISUAL
BAT	BATTERY
BC	BARE COPPER
BD	BOARD
BFF	BELOW FINISH FLOOR
BIL	BASIC INSULATION LEVEL
BLDG	BUILDING
BPIP	BOILER PLANT INSTRUMENTATION
BRKR	PANEL
BYP	BREAKER BY PASS
C	
CAB	CONDUIT
CALC	CABINET
CAP	CALCULATE
CAT	CAPACITY
CATV	CATALOG
CCR	COMMUNITY ANTENNA TELEVISION
CCTV	CONTROL CONTACTOR
cd	CLOSED CIRCUIT TELEVISION
CD	CANDELA
CF	CONSTRUCTION DOCUMENTS
CF/CI	CONTRACTOR FURNISHED
CF/OI	CONTRACTOR
CFE	FURNISHED/CONTRACTOR INSTALLED FURNISHED/OWNER INSTALLED CONTRACTOR FURNISHED EQUIPMENT
CHW	CHILLED WATER
CHWP	CHILLED WATER PUMP
CKT	CIRCUIT
CKT BRKR	CIRCUIT BREAKER
CLF	CURRENT LIMITING FUSE
CLG	CEILING
CMU	CONCRETE MASONRY UNIT
COAX	COAX CABLE
COMM	COMMUNICATION
COMPT	COMPARTMENT
CONC	CONCRETE
CONT	CONTINUE
CONTR	CONTRACTOR
COORD	COORDINATE
CPT	CONTROL POWER TRANSFORMER
CRI	COLOR RENDERING INDEX
CT	CURRENT TRANSFORMER
CTV	CABLE TELEVISION
CU	COPPER
CU FT	CUBIC FEET
CUR	CURRENT
DB	DECIBEL OR DIRECT BURIAL
DC	DIRECT CURRENT
DCP	DIMMER CONTROL PANEL
DEG C	DEGREES CELSIUS
DEG F	DEGREES FAHRENHEIT
DEMO	DEMOLITION
DIAG	DIAGRAM
DISC	DISCONNECT
DISTR	DISTRIBUTION
DISTR PNL	DISTRIBUTION PANEL
DMR SW	DIMMER SWITCH
DN	DOWN
DPDT	DOUBLE POLE, DOUBLE THROW
DPST	DOUBLE POLE, SINGLE THROW
DRSW	DOOR SWITCH
DS	DISCONNECT SWITCH
DWG	DRAWING
EC	EMPTY CONDUIT
EG	EQUIPMENT GROUND
EL	ELEVATION
ELEC	ELECTRIC OR ELECTRICAL
ELEV	ELEVATOR
EMCP	EMERGENCY MONITORING CONTROL PANEL
EMER	EMERGENCY
EMI	ELECTROMAGNETIC INTERFERENCE
EMT	ELECTRICAL METALLIC TUBING
ENCL	ENCLOSURE
EPO	EMERGENCY POWER OFF
EPRF	EXPLOSION PROOF
ESMT	EASEMENT
EWC	ELECTRIC WATER COOLER
EWH	ELECTRIC WATER HEATER
EXIST	EXISTING
FA	FIRE ALARM
FAAP	FIRE ALARM ANNUNCIATOR PANEL
FABL	FIRE ALARM BELL
FABX	FIRE ALARM BOX
FACP	FIRE ALARM CONTROL PANEL
FC	FOOTCANDLE
FI	FILM ILLUMINATOR
FIXT	FIXTURE
FLA	FULL LOAD AMPS
FLEX	FLEXIBLE METALLIC CONDUIT
FLT	FLOODLIGHT
FLUOR	FLUORESCENT
FLUOR FIX	FLUORESCENT FIXTURE
FOUTT	TELEPHONE FLOOR OUTLET
FP	FIRE PROTECTION
FSD	FIRE SMOKE DAMPER
FT	FEET OR FOOT
FU SW	FUSED SWITCH
FVNR	FULL VOLTAGE NON-REVERSING
FVR	FULL VOLTAGE REVERSING
G OR GND	GROUND OR GENERATOR
GEN	GENERATOR
GFCI	GROUND FAULT CIRCUIT INTERRUPTER
GTB	GROUND TERMINAL BOX
HID	HIGH INTENSITY DISCHARGE
HOA	HAND-OFF-AUTOMATIC
HP	HORSEPOWER
HT	HEIGHT
HZ	HERTZ
IESNA	ILLUMINATION ENGINEERING SOCIETY OF NORTH AMERICA
IMC	INTERMEDIATE METAL CONDUIT
INCAND	INCANDESCENT
IR	INFRARED
IWH	INSTANTANEOUS WATER HEATER
J-BOX	JUNCTION BOX
kV	KILOVOLT
kVA	KILOVOLT AMPERE
kVAH	KILOVOLT AMPERE PER HOUR
kVAR	KILOVOLT AMPERE REACTIVE
kW	KILOWATT
kWH	KILOWATT HOUR
kWHM	KILOWATT HOUR METER
LED	LIGHT EMITTING DIODE
LF	LINEAR FEET (FOOT)
LM	LUMEN
LP	LIGHT POLE
LPS	LOW PRESSURE SODIUM
LRA	LOCKED ROTOR AMPS
LTCP	LOCAL TEMPERATURE CONTROL PANEL
LT	LIGHT
LTG	LIGHTING
LTG PNL	LIGHTING PANEL
LTNG	LIGHTNING
LV	LOW VOLTAGE
MATV	MASTER ANTENNA TELEVISION SYSTEM
MAX	MAXIMUM
MC	METAL-CLAD
MCA	MINIMUM CIRCUIT AMPS
MCB	MAIN CIRCUIT BREAKER
MCC	MOTOR CONTROL CENTER
MDP	MAIN DISTRIBUTION PANEL
MECH	MECHANICAL
MG	MOTOR GENERATOR
MH	MANHOLE
MIN	MINIMUM
MOCP	MAXIMUM OVERCURRENT PROTECTION
MLO	MAIN LUGS ONLY
MT	MOUNT
MTD	MOUNTED
MTG	MOUNTING
MTS	MANUAL TRANSFER SWITCH
MV	MEDIUM VOLTAGE
MVA	MEGAVOLT-AMPERE
MW	MEGAWATT MICROWAVE
NA	NOT APPLICABLE
NEC	NATIONAL ELECTRICAL CODE
NEMA	NATIONAL ELECTRICAL MANUFACTURERS ASSOCIATION
NEUT OR N	NEUTRAL
NFPA	NATIONAL FIRE PROTECTION ASSOCIATION
NIC	NOT IN CONTRACT
NL	NIGHT LIGHT
NO	NORMALLY OPEN
NS	NO SCALE
NTS	NOT TO SCALE
OC	ON CENTER
OD	OUTSIDE DIAMETER
OL	OVERLOAD
P	POLE
PA	PUBLIC ADDRESS
PB	PANELBOARD, PULL BOX, OR PUSHBUTTON
PBPU	PREFABRICATED BEDSIDE PATIENT UNIT
PCB	POLYCHLORINATED BIPHENYL
PEC	PHOTOELECTRIC CELL
PED	PEDESTAL
PEND	PENDANT
PF	POWER FACTOR
PH	PHASE
PNL	PANEL
POD	POWER OPERATED DAMPER
PT	POTENTIAL TRANSFORMER
PTRV	POWER TYPE ROOF VENTILATION
PVC	POLYVINYL CHLORIDE (PLASTIC)
PWR	POWER
RCP	REFLECTED CEILING PLAN
REC	RECESSED
RECPT	RECEPTACLE
RGS	RIGID GALVANIZED STEEL
RM	ROOM
RMS	ROOT MEAN SQUARE
REQD	REQUIRED
SCC	SHORT CIRCUIT CAPACITY
SES	SERVICE ENTRANCE SECTION
SD	SMOKE DETECTOR
SF	SQUARE FOOT (FEET)
SHT	SHEET
SI	INTERNATIONAL SYSTEM OF UNITS
SPEC	SPECIFICATION
SPST	SINGLE POLE, SINGLE THROW
SURF	SURFACE
SW	SWITCH
SWBD	SWITCHBOARD
SWGR	SWITCHGEAR
TC	TIME CLOCK
TEL	TELEPHONE
TP	TWISTED PAIR
TPS	TWISTED PAIR SHIELDED
TTB	TELEPHONE TERMINAL BOARD
TV	TELEVISION
TYP	TYPICAL
UFD	UNDERFLOOR DUCT
UGND	UNDERGROUND
UL	UNDERWRITERS LABORATORY
UON	UNLESS OTHERWISE NOTED
UPS	UNINTERRUPTIBLE POWER SUPPLY
UTIL	UTILITY
V	VOLT
VA	VOLT AMPERE
VAR	VOLT AMPERE REACTIVE
VFD	VARIABLE FREQUENCY DRIVE
VOLT	VOLTAGE
W	WATT
WH	WATER HEATER
WP	WEATHERPROOF
XFER	TRANSFER
XFMR	TRANSFORMER

SYMBOLS (AS APPLICABLE)

FLOOR WALL CEILING

- DUPLEX
- QUADRUPLEX
- DUPLEX-VOICE-DATA
- GFCI DUPLEX
- SIMPLEX
- EMERGENCY DUPLEX
- EMERGENCY QUADRUPLEX
- EMERGENCY SIMPLEX
- DUPLEX-VOICE
- DUPLEX-DATA
- QUAD-VOICE
- QUAD-VOICE-DATA
- QUAD-DATA
- JUNCTION BOX
- POKE THRU
- COUNTERTOP DUPLEX
- ISOLATED GROUND DUPLEX
- ISOLATED GROUND SIMPLEX
- EXPLOSION PROOF DUPLEX
- EXPLOSION PROOF SIMPLEX
- SPLIT WIRE
- SPECIAL OUTLET
- MULTI OUTLET SURFACE RACEWAY

FLOOR WALL CEILING

- VOICE OUTLET
- DATA OUTLET
- VOICE-DATA
- CARD READER
- EMERGENCY BREAK GLASS
- PUSH BUTTON
- SPEAKER - AV
- TELCOM GROUNDING BUS BAR
- TELEPHONE BACKBOARD
- 1#12, 1#12, 1#12 — DEMOTE HOT WIRE, NEURTAL WIRE AND GROUND WIRE SIZES AND QUANTITY (RESPECTIVELY)
- 3/4" CONDUIT WITH 2#12 WIRES, UON, GROUND WIRE NOT SHOWN.
- 3/4" CONDUIT WITH 3#12 WIRES, UON, GROUND WIRE NOT SHOWN.
- 3/4" CONDUIT WITH 4#12 WIRES, UON, GROUND WIRE NOT SHOWN.
- 1LA-1,3,5 — CONDUIT HOMERUN TO PANEL BOARD 1LA WITH CIRCUIT 1,3,5
- CAPPED CONDUIT
- CONDUIT RUN UNDERGROUND OR UNDER THE FLOOR SLAB
- CONDUIT TURNING DOWN
- CONDUIT TURNING UP
- CONDUIT BREAK

FLOOR WALL CEILING

- RECESSED DOWNLIGHT
- 1X4 SURFACE MOUNTED LIGHT
- 2X4 SURFACE MOUNTED LIGHT
- 4FT WALL MOUNTED LIGHT
- 1X4 EMERGENCY LIGHT
- 2X4 EMERGENCY LIGHT
- 2X4 RECESSED LIGHT
- EXIT SIGN 1 FACE
- EXIT SIGN 1 FACE LEFT ARROW
- EXIT SIGN 2 FACE LEFT ARROW

FLOOR WALL CEILING

- LIGHT SWITCH - TIME OPERATED
- LIGHT SWITCH - SINGLE POLE
- LIGHT SWITCH - THREE WAY
- LIGHT SWITCH - KEY OPERATED
- LIGHT SWITCH - WITH PILOT LIGHT
- SWITCH - WITH THERMAL OVERLOAD
- DIMMER
- OCCUPANCY SENSOR
- PHOTOCELL
- OCCUPANCY SENSOR POWER PACK
- WALLMOUNTED OVERRIDE SWITCH
- DISTRIBUTION BOARD
- 480/277V OR 208/120V RECESSED PANEL
- 480/277V OR 208/120V SURFACE MOUNTED PANEL
- TRANSFORMER
- DISCONNECT SWITCH
- SWITCH - MOTOR RATED
- FUSED DISCONNECT SWITCH
- MAGNETIC MOTOR STARTER - NEMA SIZE 1 INDICATED
- STARTER-DISCONNECT SWITCH
- MOTOR
- RELAY
- VARIABLE FREQUENCY DRIVE
- PULL BOX
- MANHOLE
- CABLE TRAY
- THERMOSTAT
- DIFFERENTIAL PRESSURE SENSOR

- TERMINAL BLOCK
- NORMALLY CLOSED CONTACT
- NORMALLY OPEN CONTACT
- THROW CONTACT - SINGLE
- THROW CONTACT - DOUBLE
- SWITCH - CIRCUIT CLOSED
- SWITCH - CIRCUIT OPEN

FLOOR WALL CEILING

- MANUAL PULL STATION
- ADDRESSABLE INTERFACE MODULE
- WATER FLOW SWITCH
- TAMPER SWITCH
- PRESSURE SWITCH
- SMOKE-HEAT DETECTOR
- SMOKE DETECTOR
- SMOKE DETECTOR - IONIZATION OF COMBUSTION
- SMOKE DETECTOR - PHOTOELECTRIC OF COMBUSTION
- HEAT DETECTOR
- HORN
- SPEAKER-STROBE
- STROBE LIGHT UNIT
- AUTOMATIC DOOR
- DOOR HOLDER
- FIRE ALARM CONTROL PANEL
- FIRE ALARM TERMINAL CABINET
- REMOTE ANNUNCIATOR PANEL
- DUCT DETECTOR
- SMOKE DETECTOR
- FUSED DISCONNECT SWITCH
- RELAY MODULE
- MONITOR MODULE

- CIRCUIT BREAKER SWITCH
- FUSE - INLINE
- FUSE SWITCH
- FUSED-SWITCH BUS PLUG
- CIRCUIT BREAKER - ENCLOSED
- KIRK KEY INTERLOCK
- BUSDUCT
- SWITCHGEAR BUSWAY
- GROUND FAULT RELAY
- AMMETER
- DIGITAL METER U.O.N.
- TRANSFORMER - DELTA WYE-GROUNDED
- ATS - 3-POLE U.O.N. BP - WITH BYPASS ISOLATION
- BATTERY
- GENERATOR
- PANEL
- GROUND TEST WELL
- GROUND CABLE CONNECTION
- GROUND ROD - MIN. 3/4"□ x 10' LONG
- GROUND PLATE - WALL MOUNT
- GROUND PLATE - FLOOR MOUNT
- AIR TERMINAL - LIGHTNING ARRESTOR
- EQUIPMENT CONNECTION
- DIAMETER
- SQUARE FEET
- POINT OF CONNECTION
- POINT OF DISCONNECTION
- 1 E-201 — SYMBOLS SCALE: NOT TO SCALE — TITLE MARK DETAIL OR PLAN NUMBER - 1 DETAIL OR PLAN REFERENCE LOCATION FOUND IN E-201
- 1 E-501 — SECTION MARK A2T SECTION NUMBER - 1 SECTION FOUND IN E-501
- 2 E-201 — DETAIL BOUNDARY B DETAIL NUMBER - 2
- 1 — SHEET KEYNOTE
- 1 — REVISION CLOUD (DELTA 1)
- 1 E-501 — DETAIL REFERENCE DETAIL NUMBER - 1 DETAIL FOUND IN E-501
- 1 — FEEDER TAG

GENERAL NOTES

1. COORDINATE EXACT LOCATION OF EQUIPMENT CONNECTION OUTLETS WITH APPROVED MANUFACTURER'S SHOP DRAWINGS.
2. JUNCTION BOXES, PULL BOXES, ETC. REQUIRING ACCESS SHALLT NOT BE LOCATED IN HARD CEILING AREA, UNLESS ACCESS PROVIDED UNDER ARCHITECT APPROVAL.
3. REFER TO ARCHITECTURAL REFLECTED CEILING PLAN DRAWINGS FOR EXACT LOCATION OF LIGHT FIXTURES.
4. LIGHTING FIXTURES IN MECHANICAL EQUIPMENT SPACES & ELECTRICAL ROOMS ARE SHOWN IN THEIR APPROXIMATE LIGHTINGNS. FIXTURES SHALL BE INSTALLED IN LOCATIONS BEST SUITED FOR EQUIPMENT ARRANGEMENT.
5. PROPOSED CONDUIT ROUTINGS ARE FOR GENERAL INFORMATION ONLY. CONTRACTOR MAY SELECT DIFFERENT ROUON 3 BAFIELD CONDITIONS.
6. FOR ALL UNDER COUNTER AND UNDER CABINET LIGHTS. COORDINATE MOUNTING AND QUANTITY OF LIGHT FIXTUFOR THE LENGTH OF THE COUNTER/CABINET.
7. CONTRACTOR SHALL SEE ARCHITECTURAL ELEVATION DRAWINGS PRIOR TO ROUGH IN FOR LOCATION OF RECEPTACLES ANEELECTRICAL DEVICES.
8. CONTRACTOR SHALL PROVIDE A SEPARATE NEUTRAL FOR EACH GFI RECEPTACLE AND/OR CONNECT IN SUCHPARALLEL) THAT IF ANY GFI RECEPTACLE TRIPS, THE DOWN STREAM RECEPTACLE(S) SHALL CONTINUE TO FUNCTION.
9. JUNCTION BOXES FOR PLANTER & IRRIGATION CONTROL SHALL BE STUB UP 6" ABOVE FINISHED LEVEL.
10. CONTRACTOR SHALL PROVIDE A SEPARATE NEUTRAL FOR COMPUTER EQUIPMENT.
11. FOR MEDICAL EQUIPMENT I.D./DESIGNATION NUMBERS, REFER TO ARCHITECTURAL DRAWINGS.
12. ALL CIRCUITS SHALL BE LABELLED WITH CIRCUIT NUMBER AND PANEL NAME.
13. LIGHITNG FIXTURES WITH MORE THAN TWO LAMPS SHALL HAVE TWO OUTER LAMPS CONTROLLED WITH ONE SWITCH AND INN(S)/ LAMP CONTROL BY A SECOND SWITCH.
14. EACH BRANCH CIRCUIT HOMERUN SHALL HAVE NO MORE THAN THREE CIRCUITS. EACH BRANCH CIRCUIT HOMERUN SSEPERATE GREEN INSULATED GROUNDING CONDUCTOR.
15. MULTI-GANG BACKBOXES FOR DIFFERENT VOLTAGES AND TYPES OF EMERGENCY AND NORMAL BRANCH WIRING DEVICES SHDEVIDERS BETWEEN DEVICES.
16. CONTRACTOR SHALL COORDINATE WITH VA PROJECT MANAGER AND BUILDING FACILITY ENGINEER TO GET NECESSAPERFORM ANY ELECTRICAL WORK INDICATED IN THIS DRAWING.

SHEET INDEX

NUMBER	NAME	SCALE
E001	ELECTRICAL COVER SHEET	NONE
ES100	SITE POWER PLAN	1/16"=1'-0"
ES101	CAMPUS POWER DISTRIBUTION	1/32"=1'-0"
ELD101	LIGHTING DEMOLITION PLAN - 1ST FLOOR	1/8"=1'-0"
ELD102	LIGHTING DEMOLITION PLAN - 2ND FLOOR	1/8"=1'-0"
EPD101	POWER DEMOLITION PLAN - 1ST FLOOR	1/8"=1'-0"
EPD102	POWER DEMOLITION PLAN - 2ND FLOOR	1/8"=1'-0"
EPD103	POWER DEMOLITION PLAN - ROOF	1/8"=1'-0"
EL101	LIGHTING PLAN - 1ST FLOOR	1/8"=1'-0"
EL102	LIGHTING PLAN - 2ND FLOOR	1/8"=1'-0"
EP101	POWER PLAN - 1ST FLOOR	1/8"=1'-0"
EP102	POWER PLAN - 2ND FLOOR	1/8"=1'-0"
EP103	OVERHEAD POWER PLAN -1ST FLOOR	1/8"=1'-0"
EP104	OVERHEAD POWER PLAN -2ND FLOOR	1/8"=1'-0"
EP105	ROUTING POWER PLAN - 1ST FLOOR	1/8"=1'-0"
EP106	ROUTING POWER PLAN - 2ND FLOOR	1/8"=1'-0"
EP107	POWER PLAN - ROOF	1/8"=1'-0"
FA101	FIRE ALARM PLAN - 1ST FLOOR	1/8"=1'-0"
FA102	FIRE ALARM PLAN - 2ND FLOOR	1/8"=1'-0"
FA103	FIRE ALARM PLAN -ROOF	1/8"=1'-0"
E401	ENLARGED MAIN ELECTRICAL ROOM POWER PLAN	1/2"=1'-0"
E501	ELECTRICAL DETAILS	NONE
E502	ELECTRICAL DETAILS	NONE
E503	ELECTRICAL DETAILS	NONE
E504	ELECTRICAL DETAILS	NONE
E505	ELECTRICAL DETAILS	NONE
E601	PANEL SCHEDULES - 1ST FLOOR	NONE
E602	PANEL SCHEDULES - 2ND FLOOR	NONE
E603	PANEL SCHEDULES - 2ND FLOOR	NONE
E604	PANEL SCHEDULES - 2ND FLOOR	NONE
E701	SINGLE LINE DIAGRAM - DEMO	NONE
E702	SINGLE LINE DIAGRAM - NEW WORK	NONE
E703	SINGLE LINE DIAGRAM - MCC'S	NONE
E704	SINGLE LINE DIAGRAM - FIRE ALARM	NONE

FINAL BID DOCUMENTS

HILLIARD ARCHITECTS INC. COPYRIGHT

Revisions: Date

CONSULTANTS:

SYSKA HENNESSY GROUP
A member company of SH Group, Inc.

Syska Hennessy Group, Inc.
425 California Street
Suite 700
San Francisco, CA 94104
Tel: 415.288.9060
Fax: 415.835.0385
www.syska.com

REGISTERED PROFESSIONAL ENGINEER — VICTOR G. STEFFEN — No. 11872 — Exp. 12/31/14 — ELECTRICAL — STATE OF CALIFORNIA

ARCHITECT/ENGINEERS:

HILLIARD ARCHITECTS — ESTABLISHED 1988 — GOING GREEN

HILLIARD ARCHITECTS, INC
251 Post Street, Suite 620
San Francisco, CA 94108-5017
Tel 415 989 6400, Fax 415 989 3056
www.HilliardArchitects.com

Drawing Title	**ELECTRICAL COVER SHEET**
Approved: Project Director	
Project Title	**VA PA BLDG 6 LAB RENOVATION**
Location	**VAPAHCS, PALO ALTO CAMPUS 3801 MIRANDA AVE. PALO ALTO, CA 94304**
Date	**04.17.2014**
Checked	**HP**
Drawn	**HP**
Project Number	**640-13-121P**
Building Number	**6**
Drawing Number	**E001**
Dwg. of	

Office of Construction and Facilities Management

Department of Veterans Affairs

VA FORM 08-6231

1 SITE POWER PLAN - DEMO
1/16" = 1'-0"

2 SITE POWER PLAN - NEW WORK
1/16" = 1'-0"

KEY NOTES:

1. (E) 300KVA AND 750 KVA MEDIUM VOLTAGE XFMRS TO REMAIN.
2. INSTALL NEW OUTDOOR 750KVA MEDIUM VOLTAGE PAD MOUNTED LIQUID-FILLED XFMR. PROVIDE NEW CONCRETE OIL SPILL CONTAINMENT SIZED PER XFMR MANUFACTURER RECOMMENDATION.
3. INSTALL NEW NEMA 3R OUTDOOR 3200A SWITCHBOARD WITH FIXED-MOUNTED CIRCUIT BREAKERS. MOUNT EQUIPMENT ON NEW CONCRETE PAD. COORDINATE CONCRETE PAD CONSTRUCTION WITH THE SPECIFICATIONS AND WITH THE STRUCTURAL ENGINEER. REFER TO SHEET E505 DETAIL #5 FOR SWITCHBOARD ELEVATION.
4. DEMO (E) SHED AND (E) CONCRETE SLAB. RELOCATE SENSOR ON ROOF. CONTRACTOR TO COORDINATE WITH VA FOR NEW LOCATION.
5. PULL WIRE BACK TO SOURCE AND DEMO CONDUITS THAT ARE WITHIN THE CONCRETE SLAB.
6. RELOCATE EXISTING IRRIGATION VALVES AND HANDHOLE. COORDINATE WITH ARCHITECTURAL AND EXTEND PIPING TO NEW LOCATION.
7. (E) 150KVA XFMR TO REMAIN.
8. (E) MV FEEDER #2 AND #6, (2) 4" DUCT WITH 3#2/0 15KV CABLE + 1#1/0G. INCOMING MV FEED GOES INTO (E) 300KVA XFMR THEN TAPPED TO (E) 750KVA XFMR. PROVIDE NEW TAP FROM (E) 750KVA XFMR TO THE (N) 750KVA XFMR. DISCONNECT EXISTING SEPARABLE CONNECTORS TO (E) 750 KVA XFMR PRIMARY MV TERMINALS AND INSTALL (N) 200A LOADBREAK FEED-THRU INSERT TO ALLOW FOR (N) MV FEED TO (N) 750KVA XFMR. PROVIDE NEW UNDERGROUND DUCT BANK AND MV CABLES TO THE (N) 750KVA XFMR. CUT (E) CONCRETE AND TRENCH FOR (N) DUCT BANK.
9. ENLARGE THE EXISTING CONCRETE OIL SPILL CONTAINMENT AND RE-WORK CAPACITY. ENSURE CAPACITY CAN SUPPORT THE (E) 750KVA AND (N) 750KVA XFMR TOTAL OIL VOLUME.
10. PROVIDE (N) 208V FEEDER TO EXIT FROM TOP OF 6NL SWITCHBOARD AND ENTER THE BUILDING ABOVE GROUND. COORDINATE HEIGHT, CLEARANCE REQUIREMENTS AND ROUTING OF CONDUIT INSTALLATION IN THE FIELD TO COMPLY WITH NEC 230.
11. PROVIDE (N) 4" HOUSEKEEPING PAD WITH 6" OFFSET FROM THE EQUIPMENT FOOTPRINT. REFER TO DETAIL #5 ON SHEET E505 FOR ADDITIONAL INFORMATION.
12. PROVIDE (N) 480V FEEDER TO EXIT FROM (E) 750 KVA XFMR DISTRIBUTION SECTION TO NEW DISTRIBUTION PANEL #6H AND ENTER THE BUILDING ABOVE GROUND AND STUB UP PRIOR TO ENTERING BUILDING. COORDINATE HEIGHT, CLEARANCE REQUIREMENTS AND ROUTING OF CONDUIT INSTALLATION IN THE FIELD TO COMPLY WITH NEC 230.

SHEET NOTES:

1. REFER TO ES101 FOR CONTINUATION OF MV FEEDERS AND CAMPUS SITE PLAN.
2. CONTRACTOR TO CIRCUIT TRACE ALL EXISTING CIRCUITS.
3. CONTRACTOR TO FIELD VERIFY EXACT LOCATION OF EXISTING MEDIUM AND LOW VOLTAGE FEEDS. ALSO, CONTRACTOR SHALL SCAN ANY EXISTING UNDERGROUND UTILITIES THAT MIGHT BE IN CONFLICT WITH THE UNDERGROUND WORK. CONTRACTOR SHALL PROVIDE SUBMITTAL DRAWINGS FOR ACTUAL UNDERGROUND DUCT BANK ROUTING FOR REVIEW AND APPROVAL.
4. ALL ELECTRICAL EQUIPMENT OUTDOORS SHALL BE NEMA 3R CONSTRUCTION.
5. REFER TO SHEETS E701, E702 AND E703 FOR SINGLE LINE DIAGRAMS.

HILLIARD ARCHITECTS INC. COPYRIGHT

FINAL BID DOCUMENTS

Revisions: | Date

CONSULTANTS:

SYSKA HENNESSY GROUP
A member company of SH Group, Inc.

Syska Hennessy Group, Inc.
425 California Street
Suite 700
San Francisco, CA 94104
Tel: 415.288.9060
Fax: 415.835.0385
www.syska.com

REGISTERED PROFESSIONAL ENGINEER
VICTOR G. STEFFEN
No. 11872
Exp. 12/31/14
ELECTRICAL
STATE OF CALIFORNIA

ARCHITECT/ENGINEERS:

ESTABLISHED 1988 HILLIARD ARCHITECTS GOING GREEN

HILLIARD ARCHITECTS, INC
251 Post Street, Suite 620
San Francisco, CA 94108-5017
Tel 415 989 6400, Fax 415 989 3056
www.HilliardArchitects.com

Drawing Title: **SITE POWER PLAN - DEMO AND NEW WORK**

Approved: Project Director

Project Title: **VA PA BLDG 6 LAB RENOVATION**

Location: **VAPAHCS, PALO ALTO CAMPUS**
3801 MIRANDA AVE. PALO ALTO, CA 94304

Date: **04.17.2014** | Checked: **SS** | Drawn: **SS**

Project Number: **640-13-121P**

Building Number: **6**

Drawing Number: **ES100**

Dwg. of

Office of Construction and Facilities Management

Department of Veterans Affairs

VA FORM 08-6231

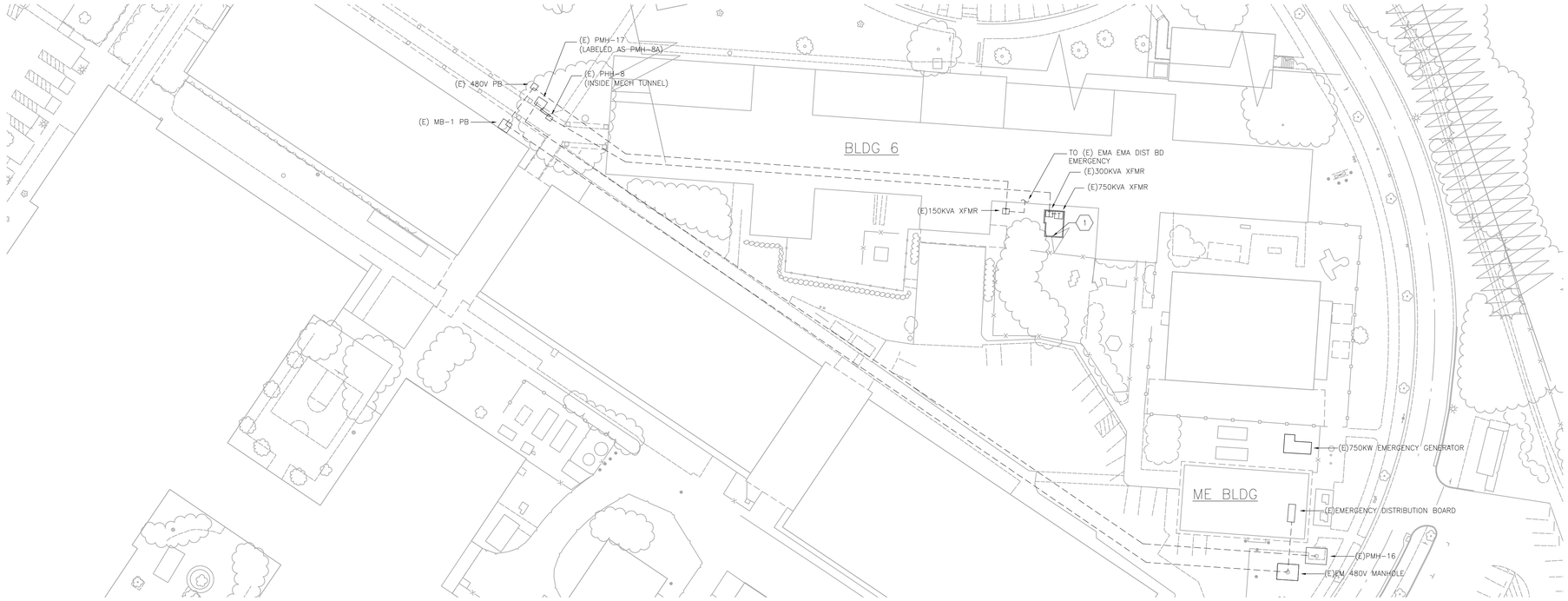

01 CAMPUS POWER DISTRIBUTION PLAN - DEMO
SCALE: 1/32" = 1'-0"

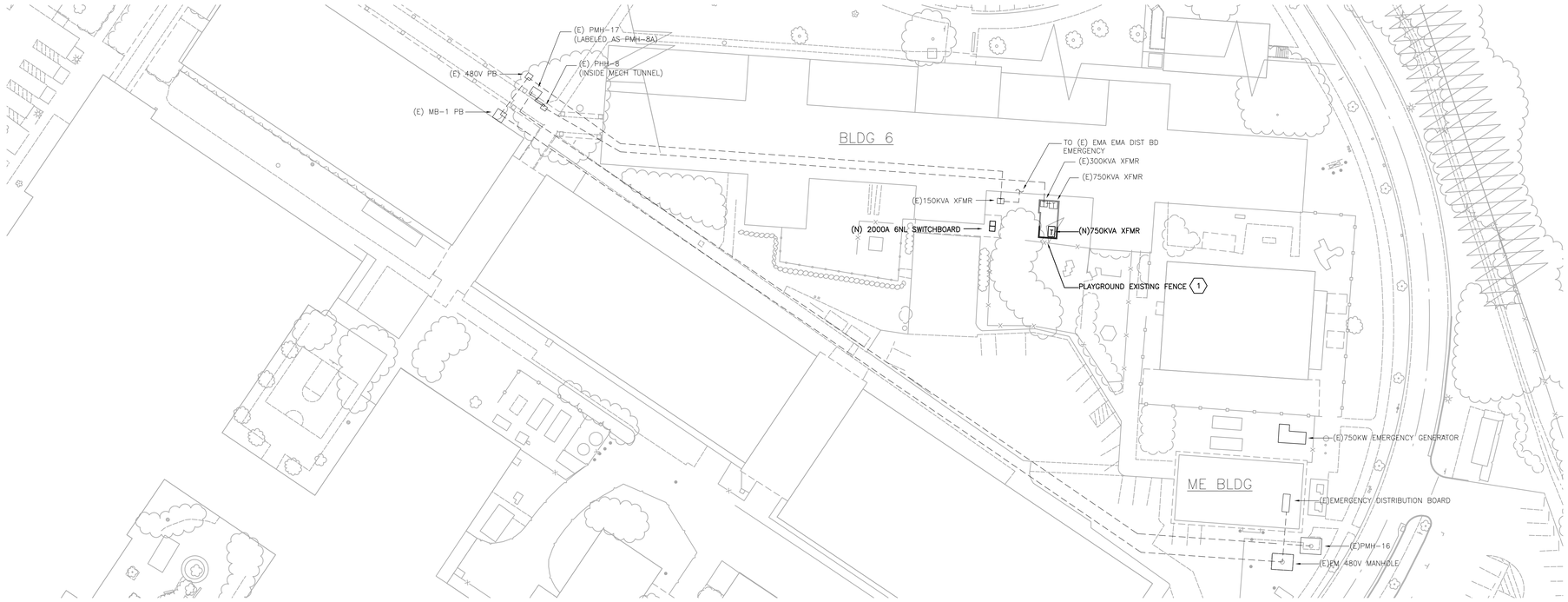

02 CAMPUS POWER DISTRIBUTION PLAN - NEW WORK
SCALE: 1/32" = 1'-0"

NORTH

KEY NOTES:

1. ENLARGE THE CONCRETE OIL SPILL CONTAINMENT. MAINTAIN PATHWAY CLEARANCE BETWEEN THE EXISTING PLAYGROUND FENCE AND THE NEW OIL SPILL CONCRETE CONTAINMENT. COORDINATE WITH ARCHITECT MINIMUM CLEARANCE NEEDED.

SHEET NOTES:

.1 REFER TO SHEET ES 100 FOR ADDITIONAL INFORMATION ON THE SITE WORK.

.2 COORDINATE WORK WITH CIVIL DRAWINGS, EXISTING AND NEW. FIELD VERIFY EXISTING UTILITIES TO BE AVOIDED RELATIVE TO THE UNDERGROUND WORK PRIOR TO ANY BID.

HILLIARD ARCHITECTS INC. COPYRIGHT 2008

FINAL BID DOCUMENTS

Revisions:	Date
ISSUED AS 60% PROGRESS SET	11.01.2013

CONSULTANTS:

SYSKA HENNESSY GROUP
A member company of SH Group, Inc.
Syska Hennessy Group, Inc.
425 California Street
Suite 700
San Francisco, CA 94104
Tel: 415.288.9060
Fax: 415.835.0385
www.syska.com

REGISTERED PROFESSIONAL ENGINEER
VICTOR G. STEFEN
No. 11872
Exp. 12/31/14
ELECTRICAL
STATE OF CALIFORNIA

ARCHITECT/ENGINEERS:

ESTABLISHED 1988 HILLIARD ARCHITECTS GOING GREEN
HILLIARD ARCHITECTS, INC
251 Post Street, Suite 620
San Francisco, CA 94108-5017
Tel 415 989 6400, Fax 415 989 3056
www.HilliardArchitects.com

Drawing Title: CAMPUS POWER DISTRIBUTION - DEMO AND NEW WORK

Approved: Project Director

Project Title: VA PA BLDG 6 LAB RENOVATION

Location: VAPAHCS - PALO ALTO CAMPUS, 3801 MIRANDA AVE, PALO ALTO, CA 94304

Date: 04.17.2014 | Checked: HP | Drawn: AF

Project Number: 640-13-121P

Building Number: 6

Drawing Number: ES101

Dwg. - of -

Office of Construction and Facilities Management

Department of Veterans Affairs

VA FORM 08-6231

KEY NOTES:

1. ROOM TO BE DEMOLISHED. COORDINATE WITH ARCHITECT. REMOVE (E) LIGHTS AND CONTROL DEVICES. DEMO CONDUIT AND WIRING BACK TO SOURCE PANEL. COORDINATE DEMOLITION WITH ARCHITECTURAL PLANS.
2. DEMO WORK WITHIN THIS AREA WAS DONE IN ADMIN PHASE.

SHEET NOTES:

1. CONTRACTOR TO CIRCUIT TRACE ALL EXISTING CIRCUITS.
2. REMOVE ALL ACCESSIBLE ABANDONED WIRING OF ALL TYPES, OR CAP AND LABEL IN JUNCTION FOR RE-USE, IN COMPLIANCE WITH THE NATIONAL ELECTRIC CODE.
3. MAINTAIN AND RESTORE, IF INTERRUPTED, ALL CONDUITS AND CONDUCTORS PASSING THROUGH RENOVATED AREAS AND SERVICING UNDISTURBED AREAS.
4. EXISTING LIGHT FIXTURES ARE TO REMAIN UON.

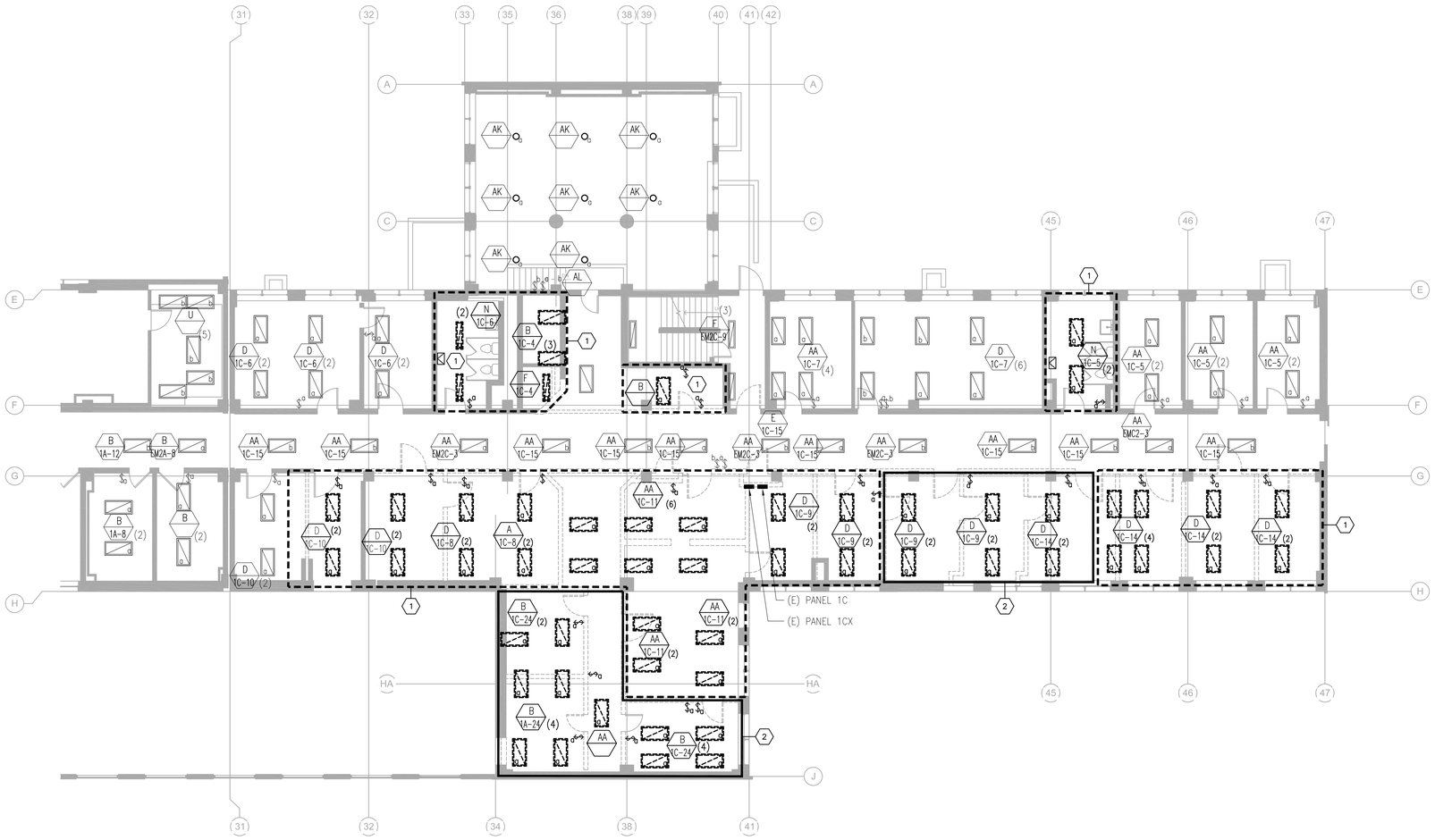

01 LIGHTING DEMOLITION PLAN - 1ST FLOOR
SCALE: 1/8" = 1'-0"

0' 8' 16' 32' NORTH

FINAL BID DOCUMENTS

HILLIARD ARCHITECTS INC. COPYRIGHT 2008

ISSUED AS 60% PROGRESS SET	11.01.2013
Revisions:	Date

CONSULTANTS:

SYSKA HENNESSY GROUP
A member company of SH Group, Inc.
Syska Hennessy Group, Inc.
425 California Street
Suite 700
San Francisco, CA 94104
Tel: 415.288.9060
Fax: 415.835.0385
www.syska.com

REGISTERED PROFESSIONAL ENGINEER VICTOR G. STEFEN No. 11872 Exp. 12/31/14 ELECTRICAL STATE OF CALIFORNIA

ARCHITECT/ENGINEERS:

ESTABLISHED 1988 HILLIARD ARCHITECTS GOING GREEN
HILLIARD ARCHITECTS, INC
251 Post Street, Suite 620
San Francisco, CA 94108-5017
Tel 415 989 6400, Fax 415 989 3056
www.HilliardArchitects.com

Drawing Title: LIGHTING DEMOLITION PLAN - 1ST FLOOR

Approved: Project Director

Project Title: VA PA BLDG 6 LAB RENOVATION

Location: VAPAHCS - PALO ALTO CAMPUS, 3801 MIRANDA AVE, PALO ALTO, CA 94304

Date: 04.17.2014 | Checked: HP | Drawn: RB

Project Number: 640-13-121P

Building Number: 6

Drawing Number: ELD101

Dwg. - of -

Office of Construction and Facilities Management

Department of Veterans Affairs

VA FORM 08-6231

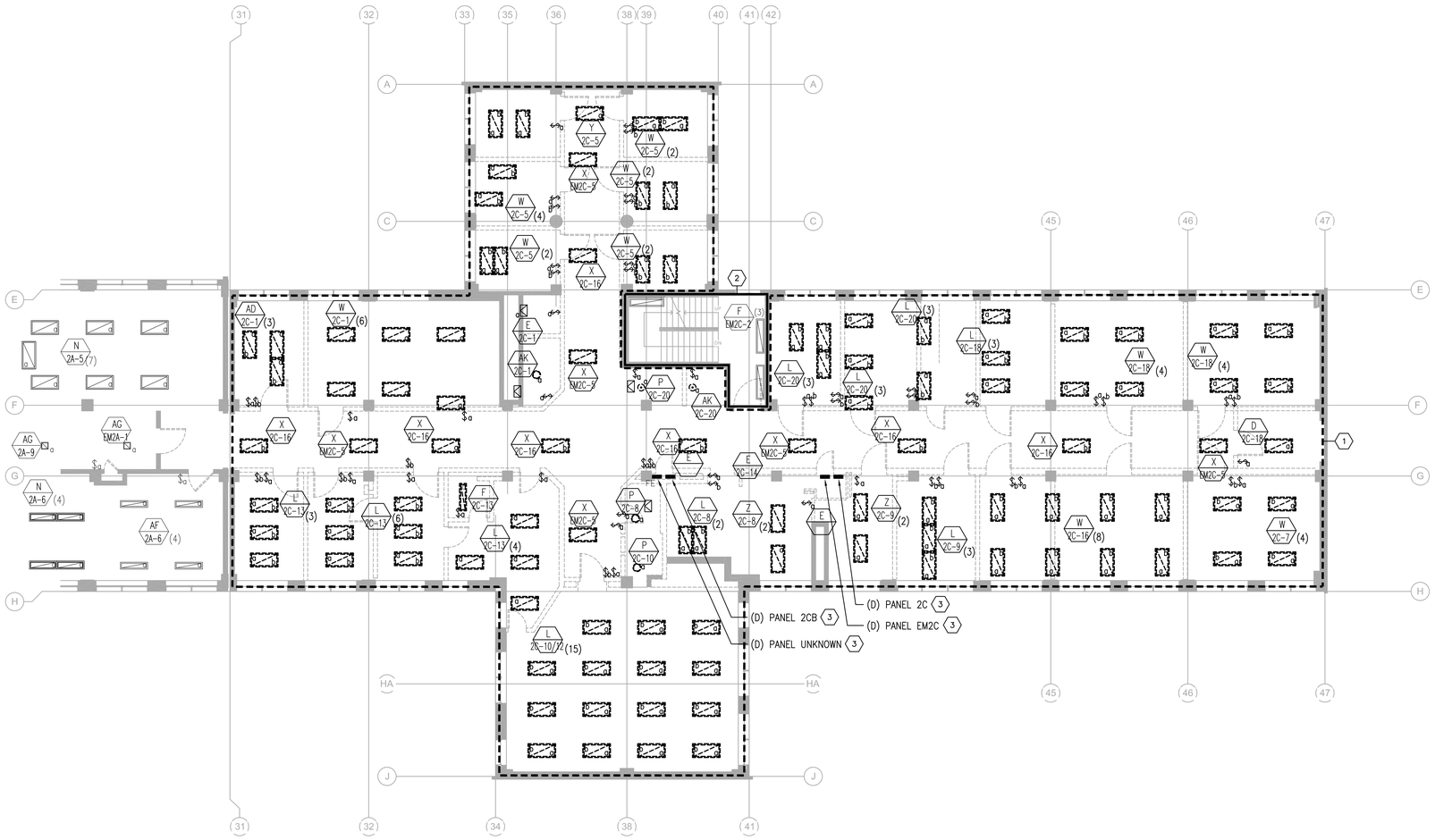

KEY NOTES:

1. ROOM TO BE DEMOLISHED. COORDINATE WITH ARCHITECT. REMOVE (E) LIGHTS AND CONTROL DEVICES. DEMO CONDUIT AND WIRING BACK TO SOURCE PANEL. COORDINATE DEMOLITION WITH ARCHITECTURAL PLANS.
2. LIGHT FIXTURES IN THIS AREA ARE EXISTING TO REMAIN. CONTRACTOR TO REPAIR OR REPLACE BROKEN LIGHT FIXTURES.
3. CONTRACTOR SHALL PERFORM FIELD VERIFICATION THAT ALL EXISTING CIRCUITS CAN BE DEMOLISHED. IF ANY CIRCUIT SHALL REMAIN, CUT-OVER EXISTING CIRCUIT TO NEW PANELS ON THIS FLOOR.

SHEET NOTES:

1. CONTRACTOR TO CIRCUIT TRACE ALL EXISTING CIRCUITS.
2. CONTRACTOR TO REMOVE ALL ACCESSIBLE ABANDONED WIRING OF ALL TYPES, OR CAP AND LABEL IN JUNCTION FOR RE-USE. IN COMPLIANCE WITH THE NATIONAL ELECTRIC CODE.
3. CONTRACTOR TO MAINTAIN AND RESTORE, IF INTERRUPTED, ALL CONDUITS AND CONDUCTORS PASSING THROUGH RENOVATED AREAS AND SERVICING UNDISTURBED AREAS.
4. CONTRACTOR TO REPAIR OR REPLACE BROKEN LIGHT FIXTURES. FIELD VERIFY.

01 LIGHTING DEMOLITION PLAN - 2ND FLOOR
SCALE: 1/8" = 1'-0"

0' 8' 16' 32' NORTH

FINAL BID DOCUMENTS

HILLIARD ARCHITECTS INC. COPYRIGHT 2008

Revisions:	Date
ISSUED AS 60% PROGRESS SET	11.01.2013

CONSULTANTS:

SYSKA HENNESSY GROUP
A member company of SH Group, Inc.
Syska Hennessy Group, Inc.
425 California Street
Suite 700
San Francisco, CA 94104
Tel: 415.288.9060
Fax: 415.835.0385
www.syska.com

REGISTERED PROFESSIONAL ENGINEER VICTOR G. STEFEN No. 11872 Exp.12/31/14 ELECTRICAL STATE OF CALIFORNIA

ARCHITECT/ENGINEERS:

ESTABLISHED 1988 HILLIARD ARCHITECTS GOING GREEN
HILLIARD ARCHITECTS, INC
251 Post Street, Suite 620
San Francisco, CA 94108-5017
Tel 415 989 6400, Fax 415 989 3056
www.HilliardArchitects.com

Drawing Title: LIGHTING DEMOLITION PLAN - 2ND FLOOR

Approved: Project Director

Project Title: VA PA BLDG 6 LAB RENOVATION

Location: VAPAHCS - PALO ALTO CAMPUS, 3801 MIRANDA AVE, PALO ALTO, CA 94304

Date: 04.17.2014 | Checked: HP | Drawn: RB

Project Number: 640-13-121P

Building Number: 6

Drawing Number: ELD102

Dwg. - of -

Office of Construction and Facilities Management

Department of Veterans Affairs

VA FORM 08-6231

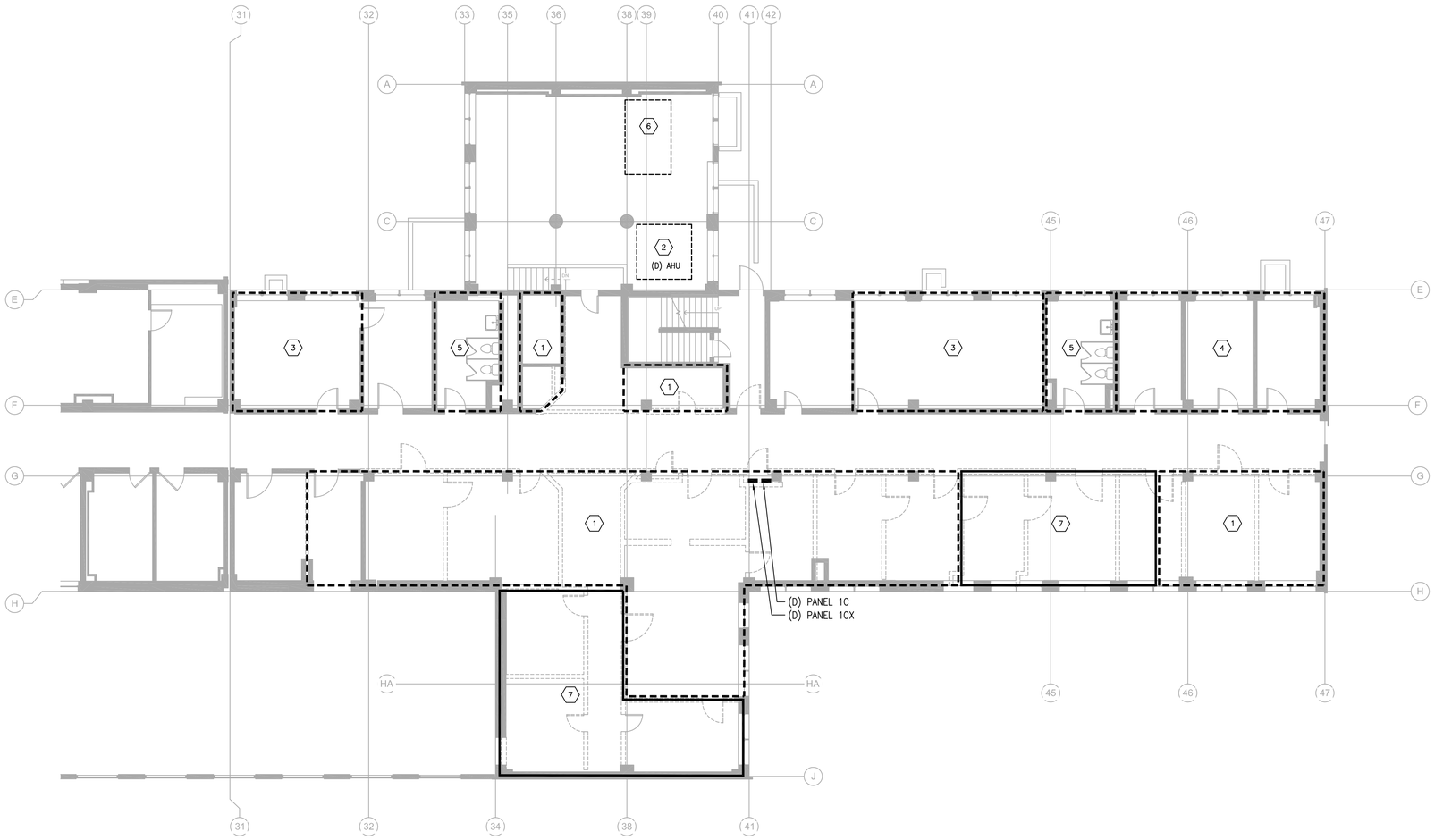

KEY NOTES:

1. EXISTING ROOMS TO BE DEMOLISHED. DEMO ALL ELECTRICAL WIRING DEVICES IN THE SPACE, UNLESS NOTED OTHERWISE ON THIS PLAN AND ON ARCHITECTURAL DRAWINGS. COORDINATE DEMOLITION WITH THE ARCHITECTURAL PLANS.
2. DEMO EXISTING AHU BY MECHANICAL. DEMO EXISTING CONDUIT WIRING AND DISCONNECT SWITCH BACK TO THE SOURCE. RE-USE (E) CIRCUIT TO POWER NEW AHU REPLACEMENT.
3. EXISTING ROOMS AND WALLS TO REMAIN. MAINTAIN WIRING CONTINUITY TO EXISTING WIRING DEVICES TO REMAIN.
4. REMOVE ALL VOICE/DATA CABLING BACK TO SOURCE IN ROOM A-123A TYPICAL FOR ROOMS C133, C134 AND C135.
5. DEMO ALL ELECTRICAL DEVICES IN EXISTING RESTROOMS.
6. DEMO TWO EXISTING PUMPS FOUND ON HVAC UNIT.
7. DEMO WORK WITHIN THIS AREA WAS DONE IN ADMIN PHASE.

SHEET NOTES:

1. CONTRACTOR TO CIRCUIT TRACE ALL EXISTING CIRCUITS.
2. REMOVE ALL ACCESSIBLE ABANDONED WIRING OF ALL TYPES, OR CAP AND LABEL IN JUNCTION FOR RE-USE, IN COMPLIANCE WITH THE NATIONAL ELECTRIC CODE.
3. MAINTAIN AND RESTORE, IF INTERRUPTED, ALL CONDUITS AND CONDUCTORS PASSING THROUGH RENOVATED AREAS AND SERVICING UNDISTURBED AREAS.

01 POWER DEMOLITION PLAN - 1ST FLOOR
SCALE: 1/8" = 1'-0"

0' 8' 16' 32' NORTH

FINAL BID DOCUMENTS

HILLIARD ARCHITECTS INC. COPYRIGHT 2008

Revisions:	Date
ISSUED AS 60% PROGRESS SET	11.01.2013

CONSULTANTS:

SYSKA HENNESSY GROUP
A member company of SH Group, Inc.

Syska Hennessy Group, Inc.
425 California Street
Suite 700
San Francisco, CA 94104
Tel: 415.288.9060
Fax: 415.835.0385
www.syska.com

REGISTERED PROFESSIONAL ENGINEER VICTOR G. STEFFEN No. 11872 Exp. 12/31/14 ELECTRICAL STATE OF CALIFORNIA

ARCHITECT/ENGINEERS:

ESTABLISHED 1988 HILLIARD ARCHITECTS GOING GREEN

HILLIARD ARCHITECTS, INC
251 Post Street, Suite 620
San Francisco, CA 94108-5017
Tel 415 989 6400, Fax 415 989 3056
www.HilliardArchitects.com

Drawing Title: **POWER DEMOLITION PLAN - 1ST FLOOR**

Approved: Project Director

Project Title: **VA PA BLDG 6 LAB RENOVATION**

Location: VAPAHCS - PALO ALTO CAMPUS, 3801 MIRANDA AVE, PALO ALTO, CA 94304

Date: 04.17.2014 | Checked: HP | Drawn: RB

Project Number: 640-13-121P

Building Number: 6

Drawing Number: EPD101

Dwg. - of -

Office of Construction and Facilities Management

Department of Veterans Affairs

VA FORM 08-6231

KEY NOTES:

1. EXISTING ROOMS TO BE DEMOLISHED. DEMO ALL ELECTRICAL WIRING DEVICES IN THE SPACE, UNLESS NOTED OTHERWISE ON THIS PLAN AND ON ARCHITECTURAL DRAWINGS. COORDINATE DEMOLITION WITH THE ARCHITECTURAL PLANS.
2. ELECTRICAL CIRCUITS IN THIS AREA ARE EXISTING TO REMAIN. CONTRACTOR TO FIELD VERIFY.
3. CONTRACTOR SHALL PERFORM FIELD VERIFICATION THAT ALL EXISTING CIRCUITS CAN BE DEMOLISHED. IF ANY CIRCUIT SHALL REMAIN, CUT-OVER EXISTING CIRCUIT TO NEW PANELS ON THIS FLOOR.

SHEET NOTES:

1. CONTRACTOR TO CIRCUIT TRACE ALL EXISTING CIRCUITS.
2. REMOVE ALL ACCESSIBLE ABANDONED WIRING OF ALL TYPES, OR CAP AND LABEL IN JUNCTION FOR RE-USE, IN COMPLIANCE WITH THE NATIONAL ELECTRIC CODE.
3. MAINTAIN AND RESTORE, IF INTERRUPTED, ALL CONDUITS AND CONDUCTORS PASSING THROUGH RENOVATED AREAS AND SERVICING UNDISTURBED AREAS.

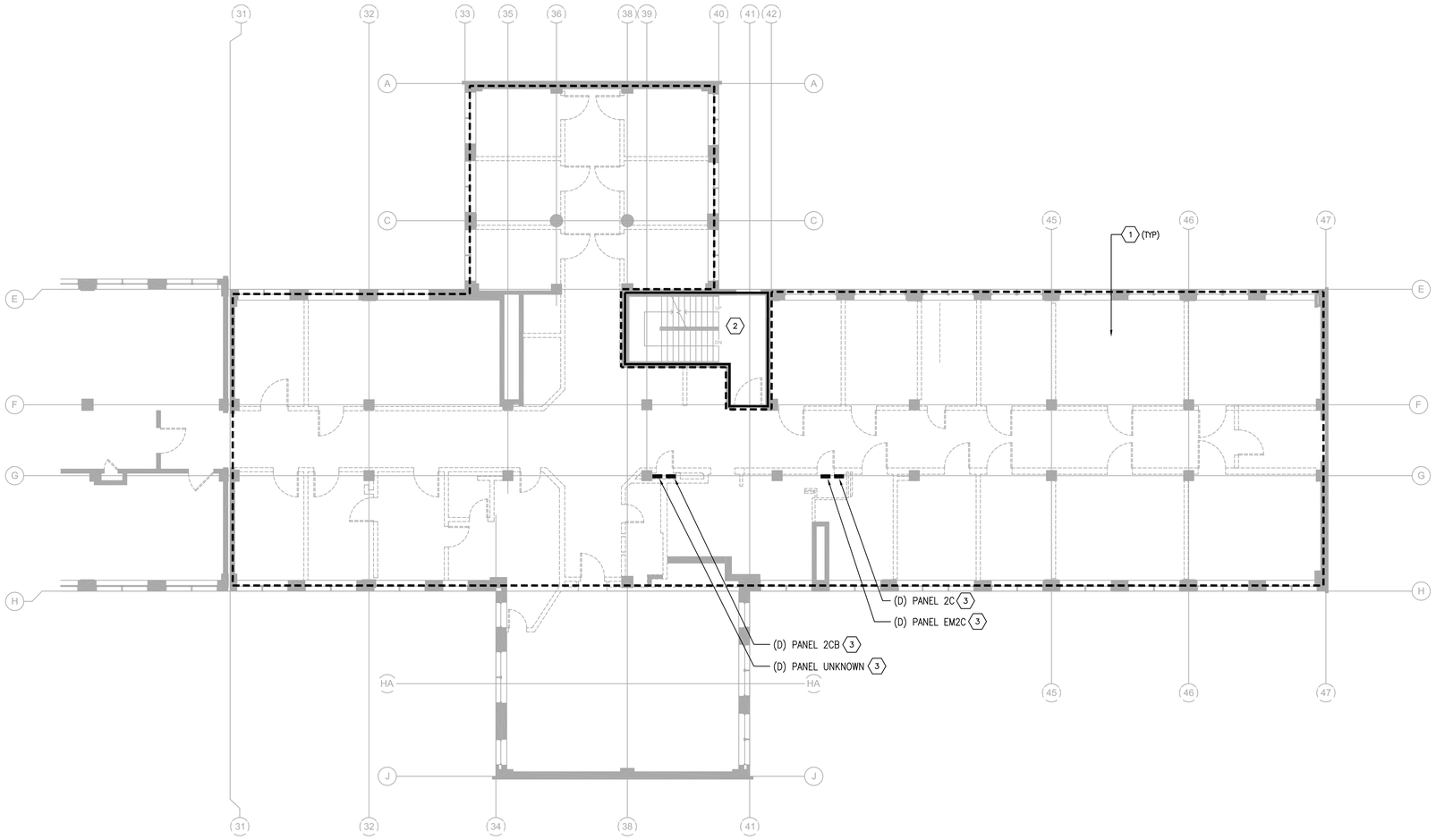

01 POWER DEMOLITION PLAN - 2ND FLOOR
SCALE: 1/8" = 1'-0"

0' 8' 16' 32' NORTH

FINAL BID DOCUMENTS

HILLIARD ARCHITECTS INC. COPYRIGHT 2008

Revisions:	Date
ISSUED AS 60% PROGRESS SET	11.01.2013

CONSULTANTS:

SYSKA HENNESSY GROUP
A member company of SH Group, Inc.

Syska Hennessy Group, Inc.
425 California Street
Suite 700
San Francisco, CA 94104
Tel: 415.288.9060
Fax: 415.835.0385
www.syska.com

REGISTERED PROFESSIONAL ENGINEER
VICTOR G. STEFEN
No. 11872
Exp.12/31/14
ELECTRICAL
STATE OF CALIFORNIA

ARCHITECT/ENGINEERS:

ESTABLISHED 1988 HILLIARD ARCHITECTS GOING GREEN

HILLIARD ARCHITECTS, INC
251 Post Street, Suite 620
San Francisco, CA 94108-5017
Tel 415 989 6400, Fax 415 989 3056
www.HilliardArchitects.com

Drawing Title: **POWER DEMOLITION PLAN - 2ND FLOOR**

Approved: Project Director

Project Title: **VA PA BLDG 6 LAB RENOVATION**

Location: **VAPAHCS - PALO ALTO CAMPUS 3801 MIRANDA AVE, PALO ALTO, CA 94304**

Date: **04.17.2014** | Checked: **HP** | Drawn: **RB**

Project Number: **640-13-121P**

Building Number: **6**

Drawing Number: **EPD102**

Dwg. - of -

Office of Construction and Facilities Management

Department of Veterans Affairs

VA FORM 08-6231

KEY NOTES:

1. CONTRACTOR SHALL DEMO EXHAUST FAN ON HVAC UNIT. AS-BUILT DEMOLISHED CONNECTION ON SINGLE LINE DIAGRAM SHEETS ON ELECTRICAL SET OF DRAWINGS.

SHEET NOTES:

1. -

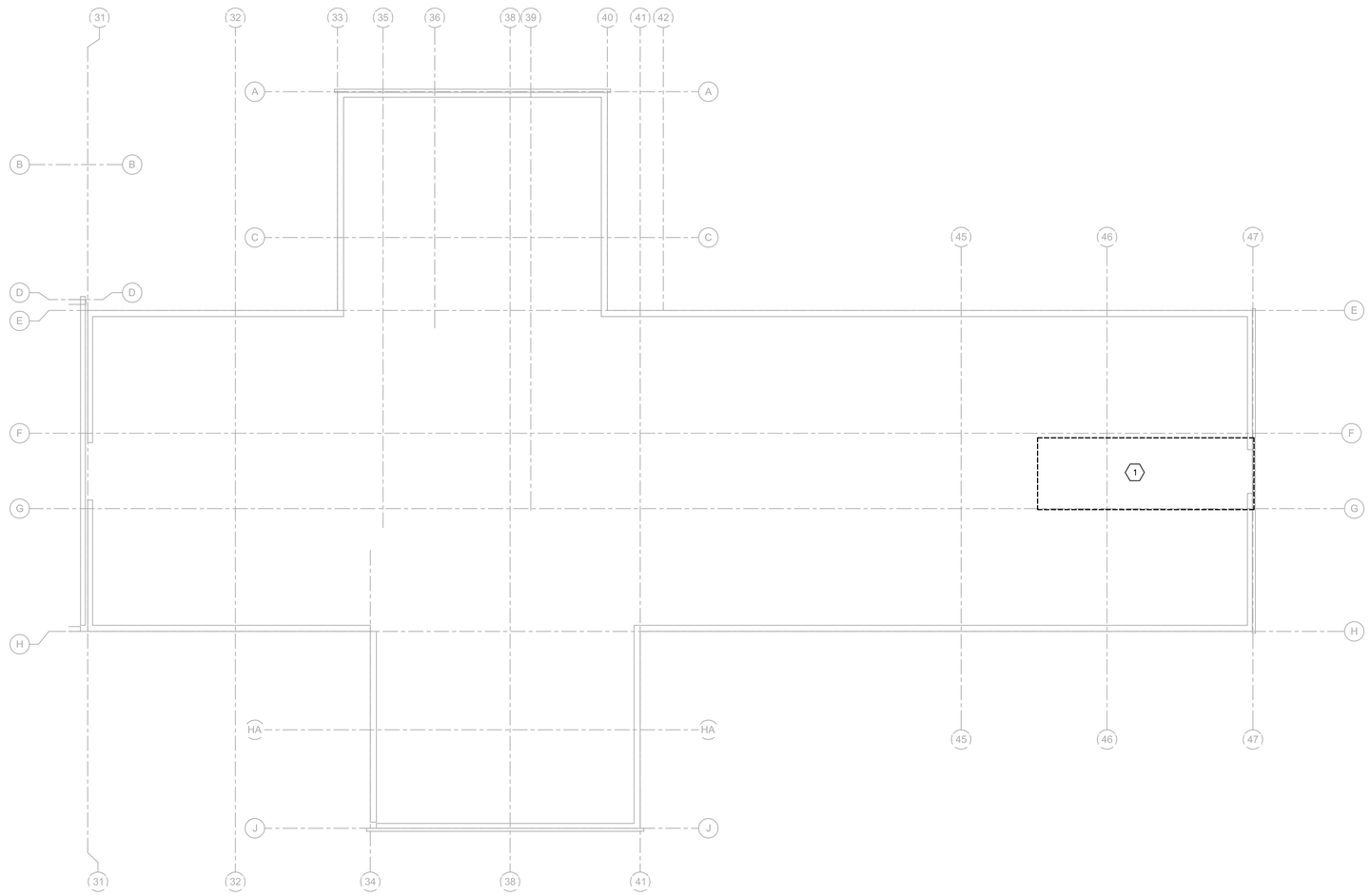

01 POWER DEMOLITION PLAN - ROOF
SCALE: 1/8" = 1'-0"

0' 8' 16' 32' NORTH

FINAL BID DOCUMENTS

Revisions:	Date
ISSUED AS 60% PROGRESS SET	11.01.2013

CONSULTANTS:

SYSKA HENNESSY GROUP
A member company of SH Group, Inc.

Syska Hennessy Group, Inc.
425 California Street
Suite 700
San Francisco, CA 94104
Tel: 415.288.9060
Fax: 415.835.0385
www.syska.com

REGISTERED PROFESSIONAL ENGINEER
VICTOR G. STEFFEN
No. 11872
Exp. 12/31/14
ELECTRICAL
STATE OF CALIFORNIA

ARCHITECT/ENGINEERS:

ESTABLISHED 1988 HILLIARD ARCHITECTS GOING GREEN

HILLIARD ARCHITECTS, INC
251 Post Street, Suite 620
San Francisco, CA 94108-5017
Tel 415 989 6400, Fax 415 989 3056
www.HilliardArchitects.com

Drawing Title: **POWER DEMOLITION PLAN - ROOF**

Approved: Project Director

Project Title: **VA PA BLDG 6 LAB RENOVATION**

Location: **VAPAHCS - PALO ALTO CAMPUS 3801 MIRANDA AVE, PALO ALTO, CA 94304**

Date: **04.17.2014** | Checked: **HP** | Drawn: **AF**

Project Number: **640-13-121P**

Building Number: **6**

Drawing Number: **EPD103**

Dwg. - of -

Office of Construction and Facilities Management

Department of Veterans Affairs

HILLIARD ARCHITECTS INC. COPYRIGHT 2008

VA FORM 08-6231

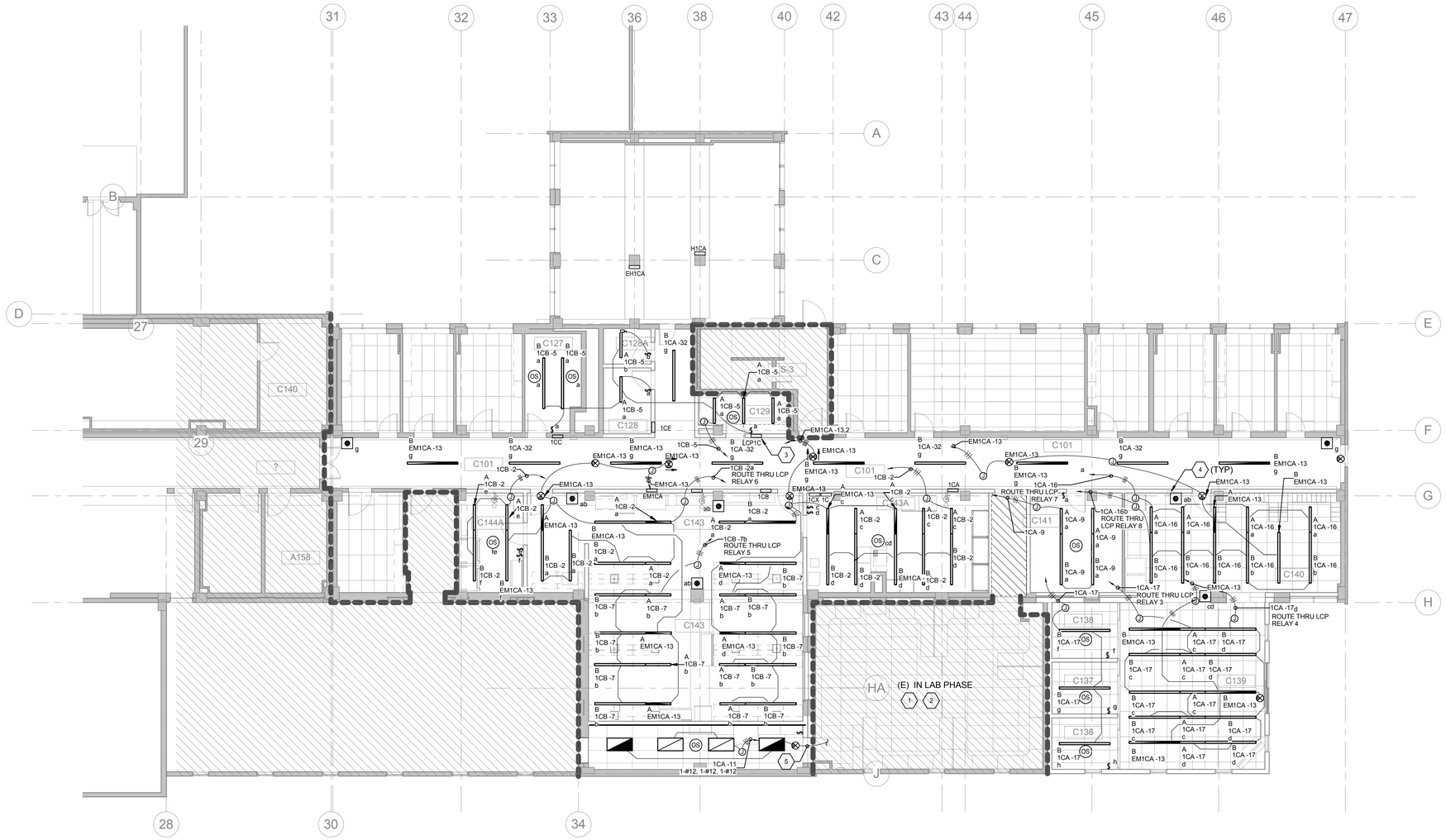

KEY NOTES:

1. (E) NORMAL LIGHTING CIRCUIT 1CA-8 SHALL BE ROUTED THROUGH THE LCP1C FOR LIGHTING CONTROLS, REFER TO LIGHTING CONTROL SCHEDULE. CIRCUIT 1CA-8 SERVES THE ADMIN AREA LIGHTING AS SHOWN IN HATCHED AREA.
2. CONTRACTOR SHALL CONNECT ALL EMERGENCY CIRCUIT IN THE HATCHED AREA TO PANEL EM1CA. CIRCUIT #34. REFER TO ADMIN PHASE ELECTRICAL DRAWINGS.
3. PROVIDE LIGHTING CONTROL PANEL WITH BUILT-IN TIME CLOCK. PROVIDE 8 RELAYS IN PANEL AND SHALL INCLUDE LOW VOLTAGE OVERRIDE SWITCHES FOR MANUAL CONTROLS OF THE LIGHTS.
4. LOW VOLTAGE PUSH BOTTON OVERRIDE SWITCHES FOR LIGHTING MANUAL CONTROLS WITHIN THE AREA.
5. CONTRACTOR SHALL CIRCUIT EMERGENCY LIGHT FIXTURE AND EXIT SIGN TO PANEL 1CA-8 WHICH SERVES THE ADMIN AREA.

SHEET NOTES:

1. REFER TO SHEET E501 DETAIL NUMBERS 1,4,5,6 FOR ZONES CONTROLLED BY LCP2C.
2. REFER TO LIGHTING CONTROL SCHEDULE FOR LIGHTING CONTROL COORDINATION.
3. OVERRIDE SWITCH SHALL CONTROL RELAYS IN LCP EACH MANUAL OVERRIDE SHALL LAST FOR 30MINS.
4. PROVIDE DUAL TECHNOLOGY OCCUPANCY SENSOR WITH ULTRASONIC AND INFRARED CAPABILITIES.
5. EXIT SIGN SHALL MATCH BUILDING STANDARD.

LIGHTING CONTROL SCHEDULE - LCP1C

RELAY NO.	PANEL 2CE CIRCUIT NO.	AREA CONTROLED
1	1CA-8b	ADMIN PHASE
2	1CA-8c	
3	1CA-17c	ZONE 1 REFER TO E501 DETAIL 1
4	1CA-17d	
5	1CB-7b	ZONE 2 REFER TO E501 DETAIL 4
6	1CB-2a	ZONE 3 REFER TO E501 DETAIL 5
7	1CA-16a	ZONE 4 REFER TO E501 DETAIL 6
8	1CA-16b	
9	1CA-32	HALLWAY C101

LIGHTING FIXTURES SCHEDULE

TYPE	DESCRIPTION	VOLTS	WATTS	LAMPS	MANUFACTURER:	CAT:
C	2'X4' LED TROFFER LENS	120V	45	2T5	COOPER LIGHTING	24EN-LD1-45-UNV-L835-CDI-U

0' 8' 16' 32'

NORTH

FINAL BID DOCUMENTS

HILLIARD ARCHITECTS INC. COPYRIGHT

Revisions:	Date

CONSULTANTS:

SYSKA HENNESSY GROUP
A member company of SH Group, Inc.

Syska Hennessy Group, Inc.
425 California Street
Suite 700
San Francisco, CA 94104
Tel: 415.288.9060
Fax: 415.835.0385
www.syska.com

REGISTERED PROFESSIONAL ENGINEER
VICTOR G. STEFFEN
No. 11872
Exp. 12/31/14
ELECTRICAL
STATE OF CALIFORNIA

ARCHITECT/ENGINEERS:

ESTABLISHED 1988 HILLIARD ARCHITECTS GOING GREEN

HILLIARD ARCHITECTS, INC
251 Post Street, Suite 620
San Francisco, CA 94108-5017
Tel 415 989 6400, Fax 415 989 3056
www.HilliardArchitects.com

Drawing Title: **LIGHTING PLAN - 1ST FLOOR**

Approved: Project Director

Project Title: **VA PA BLDG 6 LAB RENOVATION**

Location: **VAPAHCS, PALO ALTO CAMPUS 3801 MIRANDA AVE. PALO ALTO, CA 94304**

Date: **04.17.2014** | Checked: **HP** | Drawn: **HP**

Project Number: **640-13-121P**

Building Number: **6**

Drawing Number: **EL101**

Dwg. of

Office of Construction and Facilities Management

Department of Veterans Affairs

VA FORM 08-6231

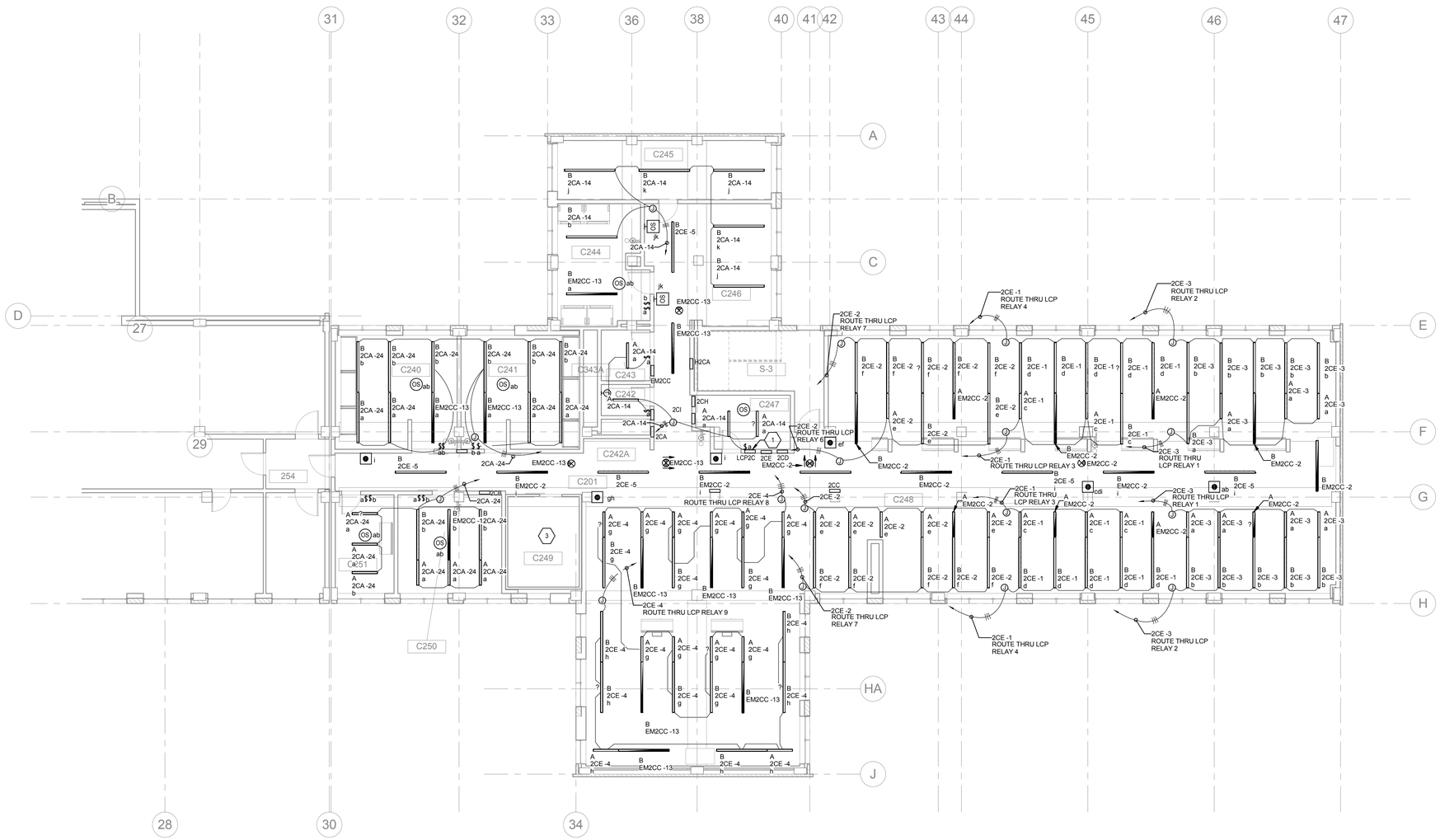

KEY NOTES:

1. PROVIDE LIGHTING CONTROL PANEL WITH BUILT-IN TIME CLOCK. IT SHALL INCLUDE LOW VOLTAGE OVERRIDE SWITCHES FOR MANUAL CONTROLS OF THE LIGHTS.
2. LOW VOLTAGE PUSH BOTTON OVERRIDE SWITCHES FOR LIGHTING MANUAL CONTROLS WITHIN THE AREA.
3. COLD ROOM IS PREFABRICATED. LIGHTING FIXTURES AND CONTROLS ARE BUILT-IN. REFER TO EP102 FOR ELECTRICAL POWER IN THE AREA.

SHEET NOTES:

1. REFER TO SHEET E501 DETAIL NUMBERS 7,8,9,10,11 FOR ZONES CONTROLLED BY LCP2C.
2. REFER TO LIGHTING CONTROL SCHEDULE FOR LIGHTING CONTROL COORDINATION.
3. OVERRIDE SWITCH SHALL CONTROL RELAYS IN LCP EACH MANUAL OVERRIDE SHALL LAST FOR 30MINS.
4. PROVIDE DUAL TECHNOLOGY OCCUPANCY SENSOR WITH ULTRASONIC AND INFRARED CAPABILITIES.
5. EXIT SIGN SHALL MATCH BUILDING STANDARD.
6. CONTRACTOR TO ROUTE ALL 2CE-5 CIRCUIT SERVING THE LIGHTS IN THE CORRIDOR THRU LCP RELAY 5.

LIGHTING CONTROL SCHEDULE - LCP2C

RELAY NO.	PANEL 2CE CIRCUIT NO.	AREA CONTROLED
1	2CE-3a	ZONE 1 DETAIL 7 REFER TO SHEET 501
2	2CE-3b	
3	2CE-1c	ZONE 2 DETAIL 8 REFER TO SHEET 501
4	2CE-1d	
5	2CE-5i	ZONE 5 DETAIL 9 REFER TO SHEET 501
6	2CE-2e	ZONE 3 DETAIL 10 REFER TO SHEET 501
7	2CE-2f	
8	2CE-4g	ZONE 4 DETAIL 11 REFER TO SHEET 501
9	2CE-4h	

LIGHTING FIXTURES SCHEDULE

TYPE	DESCRIPTION	VOLTS	WATTS	LAMPS	MANUFACTURER:	CAT:
A	PENDANT 4' FLUORESCENT	120V	30	1T5	FINELITE INC.	S12-ID-DCO-4'-2T5-SC-91W-OPEN-120-AC-FE-1
B	PENDANT 8' FLUORESCENT	120V	60	2T5	FINELITE INC.	S12-ID-DCO-8'-2T5-SC-91W-OPEN-120-AC-FE-1

0' 8' 16' 32'

NORTH

FINAL BID DOCUMENTS

HILLIARD ARCHITECTS INC. COPYRIGHT

Revisions:	Date

CONSULTANTS:

SYSKA HENNESSY GROUP
A member company of SH Group, Inc.

Syska Hennessy Group, Inc.
425 California Street
Suite 700
San Francisco, CA 94104
Tel: 415.288.9060
Fax: 415.835.0385
www.syska.com

REGISTERED PROFESSIONAL ENGINEER
VICTOR G. STEFFEN
No. 11872
Exp. 12/31/14
ELECTRICAL
STATE OF CALIFORNIA

ARCHITECT/ENGINEERS:

ESTABLISHED 1988 HILLIARD ARCHITECTS GOING GREEN

HILLIARD ARCHITECTS, INC
251 Post Street, Suite 620
San Francisco, CA 94108-5017
Tel 415 989 6400, Fax 415 989 3056
www.HilliardArchitects.com

Drawing Title: **LIGHTING PLAN - 2ND FLOOR**

Approved: Project Director

Project Title: **VA PA BLDG 6 LAB RENOVATION**

Location: **VAPAHCS, PALO ALTO CAMPUS 3801 MIRANDA AVE. PALO ALTO, CA 94304**

Date: **04.17.2014** | Checked: **HP** | Drawn: **HP**

Project Number: **640-13-121P**

Building Number: **6**

Drawing Number: **EL102**

Dwg. of

Office of Construction and Facilities Management

Department of Veterans Affairs

VA FORM 08-6231

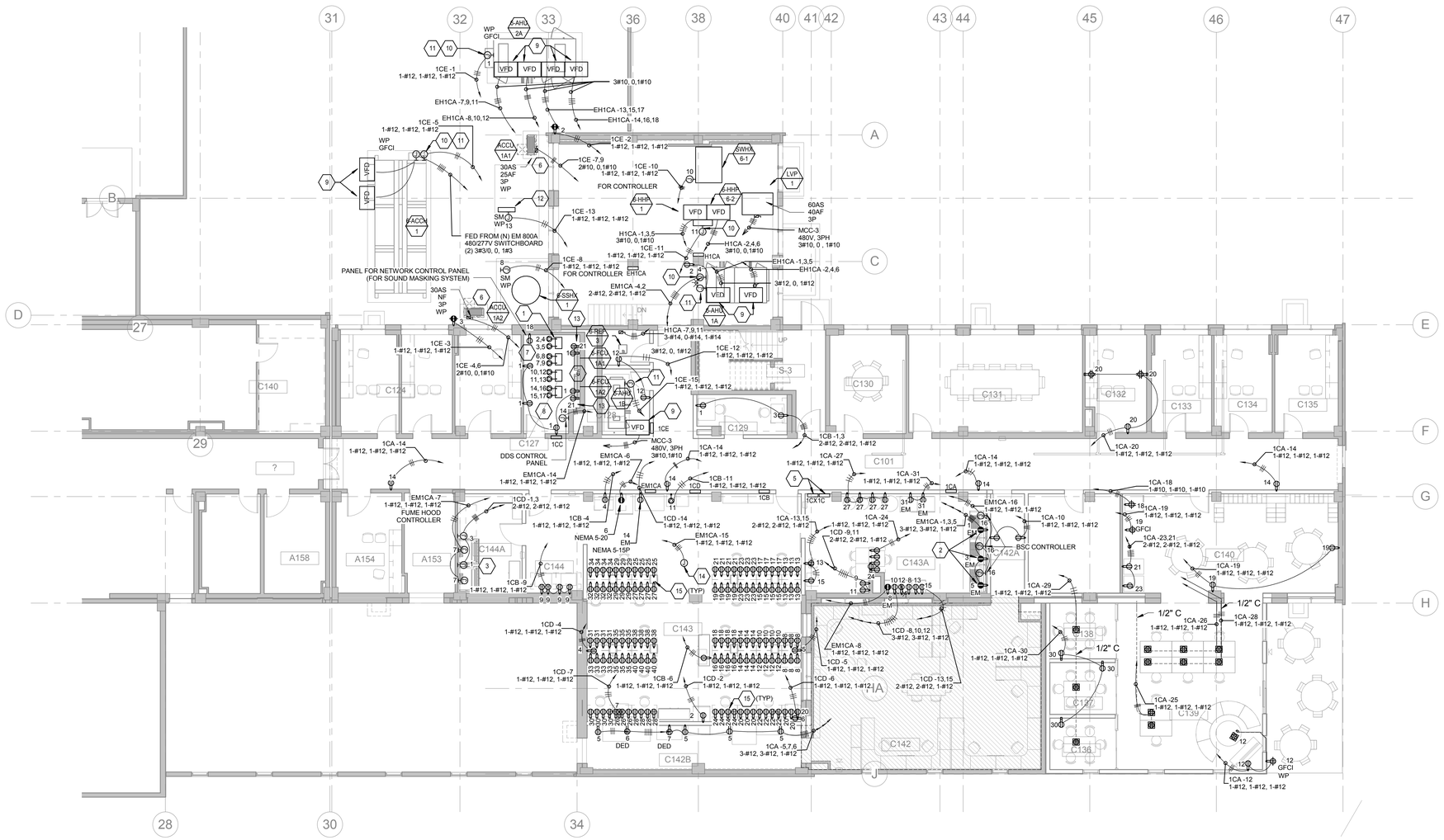

1 POWER PLAN - 1ST FLOOR
1/8" = 1'-0"

KEY NOTES:

1. PROVIDE L6-30R OUTLETS IN IT ROOMS AND OUTLETS SHALL BE MOUNTED ABOVE THE RACKS ON THE CABLE TRAY. COORDINATE WITH TELECOM CONTRACTOR FOR EXACT LOCATION. PROVIDE 2#10, 0, 1#10 WIRE AND 3/4"C.
2. BIOSAFETY CABINETS RECEPTACLES SHOULD BE MOUNTED CLOSE AS POSSIBLE TO THE RIGHT SIDE OF THE CABINET, AT A HEIGHT EVEN WITH OR HIGHER THAN, THE TOP OF THE BENCH OR STAND.
3. BUILT-IN JUNCTION BOX ON TOP OF THE FUME HOOD SHALL HAVE A SINGLE POINT CONNECTION (HARD WIRED) TO THE JUNCTION BOX AT THE WALL. PROVIDE MOTOR RATED SWITCH FOR DISCONECTING MEANS.
4. OUTLET BOXES AND CONDUIT STUB-UP ARE PRE-INSTALLED IN THE ADMIN PACKAGE. USE OUTLET BOXES AND INSTALL NEW OUTLETS.
5. PROVIDE NEW PANEL IC AND ICX. REPLACE EXISTING BREAKERS WITH A SIMILAR NEW BREAKERS AND REWIRE EXISTING TO REMAIN CIRCUITS TO THE NEW BREAKERS. CONTRACTOR TO COORDINATE.
6. 6-FCUC-1A1, AND 6-FCUC-1A2 SHALL HAVE A SINGLE POINT CONNECTION TO 6-ACCU-1A1, AND 6-ACCU-1A2, RESPECTIVELY. COORDINATE WITH MECHANICAL CONTRACTOR FOR EXACT CONNECTION. PROVIDE MOTOR RATED SWITCH AS DISCONNECTING MEANS. PROVIDE 3/4"C FOR CONNECTION AND 3/4"CO FOR COMMUNICATION BETWEEN UNITS.
7. PROVIDE 1#6 AWG GREEN GROUND WIRE. TIE TO THE NEAREST BUILDING STEEL AND COLD WATER PIPE. PROVIDE 1#6 AWG GREEN GROUND WIRE AND GROUND THE FOLLOWING: CABLE TRAY, RACKS, CABINET, AND OTHER TELECOM EQUIPMENT. REFER TO TECHNOLOGY FOR ADDITIONAL INFO. REFER TO SHEET E505 FOR DETAIL.
8. VA SHALL PROVIDE RACK MOUNTED UPS. UPS BATTERY SHALL BE SIZED TO PROVIDE 1 HOUR BATTERY RUNTIME.
9. VFD ASSOCIATED TO THE AIR HANDLING UNIT HAS A SINGLE POINT POWER CONNECTION. CONTRACTOR SHALL COORDINATE WITH MECHANICAL CONTRACTOR FOR EXACT TERMINATION POINT.
10. PROVIDE 120V POWER TO CONTROL PANEL. COORDINATE WITH MECHANICAL CONTRACTOR FOR PANEL LOCATION.
11. EXTEND WIRE TO POWER LIGHT FIXTURES INSIDE THE AIR HANDLING UNIT. CONTRACTOR TO FIELD VERIFY QUANTITY AND EXACT LOCATION.
12. BYPASS CONTROL VALVE FOR CHILLED WATER SYSTEM. PROVIDE 3/4"C.O. CONTRACTOR TO COORDINATE WITH MECHANICAL CONTRACTOR FOR EXACT LOCATION.
13. POWER FOR CONDENSATE PUMP. CONTRACTOR TO FIELD VERIFY CONNECTION AND MOUNTING HEIGHT. RECEPTACLE SHALL BE MOUNTED 8' AFF.
14. POWER FOR DDC CONTROLLER SERVING THE AREA. COORDINATE WITH MECHANICAL FOR EXACT LOCATION.
15. OUTLETS ARE BUILT-IN ON POWERSTRIP OF LAB BENCHES.

SHEET NOTES:

1. LAB BENCHES EQUIPED WITH A POWER STRIP IN THE OPEN LAB AREA SHALL BE PLUGGED INTO THE OVERHEAD SERVICE CARRIER. COORDINATE LENGTH AS NEEDED IN THE FEILD. REFER TO SHEET EP103 FOR BRANCH CIRCUIT WIRING.
2. ALL FLOOR MOUNTED RECEPTACLES SHALL BE PEDESTAL TYPE.
3. EMERGENCY RECEPTACLES SHALL BE SELF-ILLUMINATED TYPE IF THERE IS NO EMERGENCY LIGHTING IN THE AREA. REFER TO EL101.
4. MCC-3 IS LOCATED IN MAIN ELECTRICAL ROOM IN 1ST FLOOR A WING. USE EXISTING SPACE IN MCC-3. REFER TO SHEET E703 FOR CONNECTION.
5. CONTRACTOR TO REPAIR OR REPLACE BROKEN SURFACE MOUNTED RACEWAY AND OUTLETS.
6. PROVIDE RIGID STEEL CONDUIT FOR UNDERGROUND AND STUB UP CONDUIT.
7. RECEPTACLES THAT ARE FLOOR MOUNTED, PERFORM SAW CUTTING/TRENCHING TO ROUTE UNDERGROUND CONDUITS. ENSURE NO EXISTING PIPES OR OTHER ELEMENTS ARE OBSTRUCTING THE INSTALLATION.
8. CIRCUITS IN THE IT ROOM C127 ARE CIRCUITED FROM PANEL 1CC. REFER TO DRAWINGS FOR CIRCUIT NUMBER.
9. CONTRACTOR TO PROVIDE 3/4" C.O. TIE IN TO DDC CONTROL PANEL FROM THE FOLLOWING EQUIPMENT: 6-AHU-1A, 6-AHU-2A, 6-AHU-1B, 6-ACCU-1A1, 6-ACCU-1A2, 6-HHP-1, 6-HHP-2, AND 6-ACCH-1. COORDINATE WITH CONTROLS CONTRACTOR FOR EXACT TERMINATION POINT AND QUANTITY. LOW VOLTAGE WIRING SHALL BE PROVIDED BY CONTROLS CONTRACTOR.
10. VFD AND VENTRURI VALVE LOCATIONS SHALL BE FIELD COORDINATED WITH MECHANICAL CONTRACTOR. REFER TO SHEET EP103 FOR BRANCH CIRCUIT WIRING.
11. CONTRACTOR TO REFER TO MECHANICAL SCHEDULES FOR ELECTRICAL RATING OF ALL MECHANICAL EQUIPMENT.

0' 8' 16' 32'

NORTH

FINAL BID DOCUMENTS

HILLIARD ARCHITECTS INC. COPYRIGHT

Revisions:	Date

CONSULTANTS:

SYSKA HENNESSY GROUP
A member company of SH Group, Inc.

Syska Hennessy Group, Inc.
425 California Street
Suite 700
San Francisco, CA 94104
Tel: 415.288.9060
Fax: 415.835.0385
www.syska.com

REGISTERED PROFESSIONAL ENGINEER
VICTOR G. STEFFEN
No. 11872
Exp. 12/31/14
ELECTRICAL
STATE OF CALIFORNIA

ARCHITECT/ENGINEERS:

ESTABLISHED 1988 HILLIARD ARCHITECTS GOING GREEN

HILLIARD ARCHITECTS, INC
251 Post Street, Suite 620
San Francisco, CA 94108-5017
Tel 415 989 6400, Fax 415 989 3056
www.HilliardArchitects.com

Drawing Title: **POWER PLAN - 1ST FLOOR**

Approved: Project Director

Project Title: **VA PA BLDG 6 LAB RENOVATION**

Location: VAPAHCS, PALO ALTO CAMPUS, 3801 MIRANDA AVE. PALO ALTO, CA 94304

Date: 04.17.2014 | Checked: HP | Drawn: HP

Project Number: 640-13-121P

Building Number: 6

Drawing Number: EP101

Dwg. of

Office of Construction and Facilities Management

Department of Veterans Affairs

VA FORM 08-6231

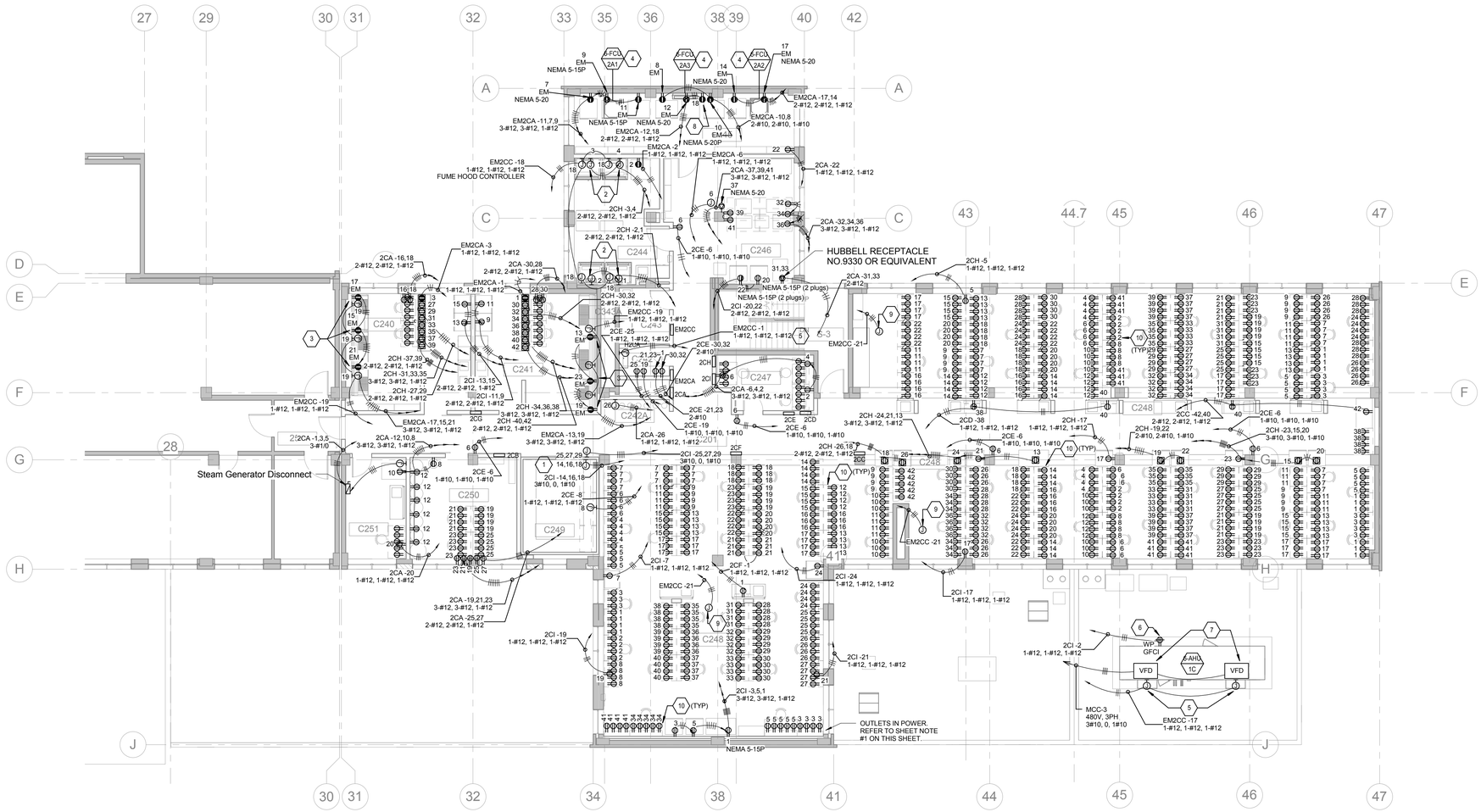

1 POWER PLAN - 2ND FLOOR
1/8" = 1'-0"

KEY NOTES:

1. COLD ROOM IS PREFABRICATED. JUNCTION BOXES SHALL PROVIDE POWER TO ELECTRICAL EQUIPMENT WITHIN THE COLD ROOM C249. CONTRACTOR SHALL PROVIDE GFCI OUTLETS AS NECESSARY.
2. BUILT-IN JUNCTION BOX ON TOP OF THE FUME HOOD SHALL HAVE A SINGLE POINT CONNECTION (HARD WIRED) TO THE JUNCTION BOX AT THE WALL. PROVIDE MOTOR RATED SWITCH FOR DISCONECTING MEANS.
3. BIOSAFETY CABINETS RECEPTACLES SHOULD BE MOUNTED CLOSE AS POSSIBLE TO THE RIGHT SIDE OF THE CABINET, AT A HEIGHT EVEN WITH OR HIGHER THAN, THE TOP OF THE BENCH OR STAND.
4. 6-FCU-2A1, 6-FCU-2A2, AND 6-FCU-2A3 SHALL HAVE A SINGLE POINT CONNECTION TO 6-ACCU-2A1, 6-ACCU-2A2, AND 6-ACCU-2A3, RESPECTIVELY. 6-FCU-2A1, 6-ACCU-2A2, AND 6-ACCU-2A3 ARE LOCATED ON THE ROOF. SEE SHEET EP107. PROVIDE MOTOR RATED SWITCH AS DISCONNECTING MEANS. COORDINATE WITH MECHANICAL CONTRACTOR FOR EXACT CONNECTION. PROVIDE 3/4"C FOR CONNECTION AND 3/4"CO FOR COMMUNICATION BETWEEN UNITS.
5. PROVIDE 120V POWER TO CONTROL PANEL. COORDINATE WITH MECHANICAL CONTRACTOR FOR PANEL LOCATION.
6. EXTEND WIRE TO POWER LIGHT FIXTURES INSIDE THE AIR HANDLING UNIT. CONTRACTOR TO FIELD VERIFY QUANTITY AND EXACT LOCATION.
7. VFD ASSOCIATED TO THE AIR HANDLING UNIT HAS A SINGLE POINT POWER CONNECTION. COORDINATE WITH MECHANICAL CONTRACTOR FOR EXACT TERMINATION POINT.
8. POWER FOR CONDENSATE PUMP. CONTRACTOR TO FIELD VERIFY CONNECTION AND MOUNTING HEIGHT. RECEPTACLE SHALL BE MOUNTED 7' AFF.
9. PROVIDE 1#12, 1#12, 1#12 WIRE TO POWER DDC CONTROLLER SERVING THE AREA. COORDINATE WITH MECHANICAL FOR EXACT LOCATION.
10. OUTLETS ARE BUILT-IN ON POWERSTRIP OF LAB BENCHES. REFER TO SHEET EP104 FOR BRANCH CIRCUIT WIRING.

SHEET NOTES:

1. LAB BENCHES EQUIPED WITH A POWER STRIP IN THE OPEN LAB AREA SHALL BE PLUGGED INTO THE OVERHEAD SERVICE CARRIER. COORDINATE LENGTH AS NEEDED IN THE FEILD.
2. ALL FLOOR MOUNTED RECEPTACLES SHALL BE PEDESTAL TYPE.
3. EMERGENCY RECEPTACLES SHALL BE SELF-ILLUMINATED TYPE IF THERE IS NO EMERGENCY LIGHTING IN THE AREA.
4. MCC-3 IS LOCATED IN MAIN ELECTRICAL ROOM IN 1ST FLOOR A WING. REFER TO SHEET E703 FOR CONNECTION.
5. CONTRACTOR TO PROVIDE 3/4" C.O. TIE IN TO DDC CONTROL PANEL FROM THE FOLLOWING EQUIPMENT: 6-AHU-1C, 6-ACCU-1B1, AND 6-ACCU-1B2. COORDINATE WITH CONTROLS CONTRACTOR FOR EXACT TERMINATION POINT. LOW VOLTAGE WIRING SHALL BE PROVIDED BY CONTROLS CONTRACTOR.
6. VFD AND VENTRURI VALVE LOCATIONS SHALL BE FIELD COORDINATED WITH MECHANICAL CONTRACTOR. REFER TO SHEET EP-104.
7. CONTRACTOR TO REFER TO MECHANICAL SCHEDULES FOR ELECTRICAL RATING OF ALL MECHANICAL EQUIPMENT.

0' 8' 16' 32'

NORTH

FINAL BID DOCUMENTS

HILLIARD ARCHITECTS INC. COPYRIGHT

Revisions:	Date

CONSULTANTS:

SYSKA HENNESSY GROUP
A member company of SH Group, Inc.

Syska Hennessy Group, Inc.
425 California Street
Suite 700
San Francisco, CA 94104
Tel: 415.288.9060
Fax: 415.835.0385
www.syska.com

REGISTERED PROFESSIONAL ENGINEER
VICTOR G. STIFFER
No. 11872
Exp. 12/31/14
ELECTRICAL
STATE OF CALIFORNIA

ARCHITECT/ENGINEERS:

ESTABLISHED 1988 HILLIARD ARCHITECTS GOING GREEN

HILLIARD ARCHITECTS, INC
251 Post Street, Suite 620
San Francisco, CA 94108-5017
Tel 415 989 6400, Fax 415 989 3056
www.HilliardArchitects.com

Drawing Title	POWER PLAN - 2ND FLOOR
Approved: Project Director	
Project Title	VA PA BLDG 6 LAB RENOVATION
Location	VAPAHCS, PALO ALTO CAMPUS 3801 MIRANDA AVE. PALO ALTO, CA 94304
Date	04.17.2014
Checked	HP
Drawn	HP
Project Number	640-13-121P
Building Number	6
Drawing Number	EP102
Dwg. of	

Office of Construction and Facilities Management

Department of Veterans Affairs

VA FORM 08-6231

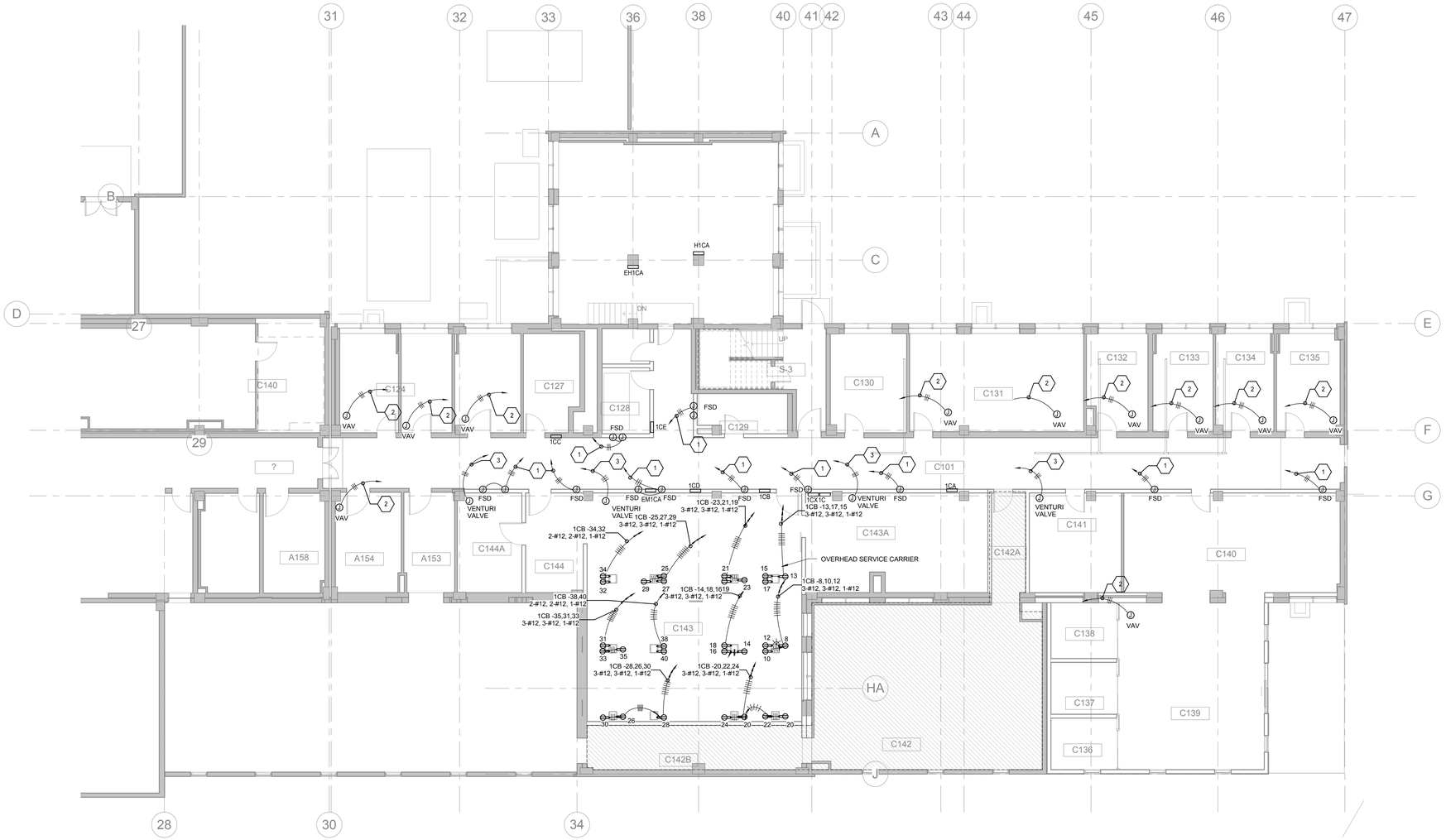

KEY NOTES:

1. FSD SHALL BE CIRCUITED FROM PANEL EM1CA CIRCUIT #11. PROVIDE 1#12, 1#12, 1#12 WIRE AND 3/4"C AND PROVIDE 3/4"C.O. TIE TO DUCT SMOKE DETECTION. SEE MECHANICAL DRAWING FOR EXACT LOCATION.
2. PROVIDE CONTROL TRANSFORMERS FOR VAV AND SHALL BE CIRCUITED FROM PANEL EM1CA CIRCUIT #9. PROVIDE 1#12, 1#12, 1#12 WIRE AND 3/4"C. CONTRACTOR SHALL PROVIDE LOW VOLTAGE POWER TO VAV TERMINAL UNIT FROM VAV TRANSFORMER. PROVIDE MOTOR RATED DISCONNECT SWITCH. COORDINATE WITH MECHANICAL CONTRACTOR FOR EXACT LOCATION.
3. PROVIDE CONTROL TRANSFORMERS FOR VENTURI CONTROL VALVE AND SHALL BE CIRCUITED FROM PANEL EM1CA CIRCUIT #10. PROVIDE 1#12, 1#12, 1 #12 WIRE AND 3/4"C. CONTRACTOR SHALL PROVIDE LOW VOLTAGE POWER TO VAV TERMINAL UNIT FROM VAV TRANSFORMER. PROVIDE MOTOR RATED DISCONNECT SWITCH. COORDINATE WITH MECHANICAL CONTRACTOR FOR EXACT LOCATION.

SHEET NOTES:

1. CONTRACTOR TO PROVIDE OUTLETS PER CIRCUIT ON EACH OVERHEAD SERVICE CARRIER.
2. REFER TO MECHANICAL DRAWINGS FOR EQUIPMENT SPECIFICATION AND LOCATION.

0' 8' 16' 32'

NORTH

FINAL BID DOCUMENTS

HILLIARD ARCHITECTS INC. COPYRIGHT

Revisions: Date

CONSULTANTS:

SYSKA HENNESSY GROUP
A member company of SH Group, Inc.

Syska Hennessy Group, Inc.
425 California Street
Suite 700
San Francisco, CA 94104
Tel: 415.288.9060
Fax: 415.835.0385
www.syska.com

REGISTERED PROFESSIONAL ENGINEER
VICTOR G. STEFFEN
No. 11872
Exp. 12/31/14
ELECTRICAL
STATE OF CALIFORNIA

ARCHITECT/ENGINEERS:

ESTABLISHED 1988 HILLIARD ARCHITECTS GOING GREEN

HILLIARD ARCHITECTS, INC
251 Post Street, Suite 620
San Francisco, CA 94108-5017
Tel 415 989 6400, Fax 415 989 3056
www.HilliardArchitects.com

Drawing Title: **OVERHEAD POWER PLAN - 1ST FLOOR**

Approved: Project Director

Project Title: **VA PA BLDG 6 LAB RENOVATION**

Location: **VAPAHCS, PALO ALTO CAMPUS 3801 MIRANDA AVE. PALO ALTO, CA 94304**

Date: **04.17.2014** | Checked: **HP** | Drawn: **HP**

Project Number: **640-13-121P**

Building Number: **6**

Drawing Number: **EP103**

Dwg. of

Office of Construction and Facilities Management

Department of Veterans Affairs

VA FORM 08-6231

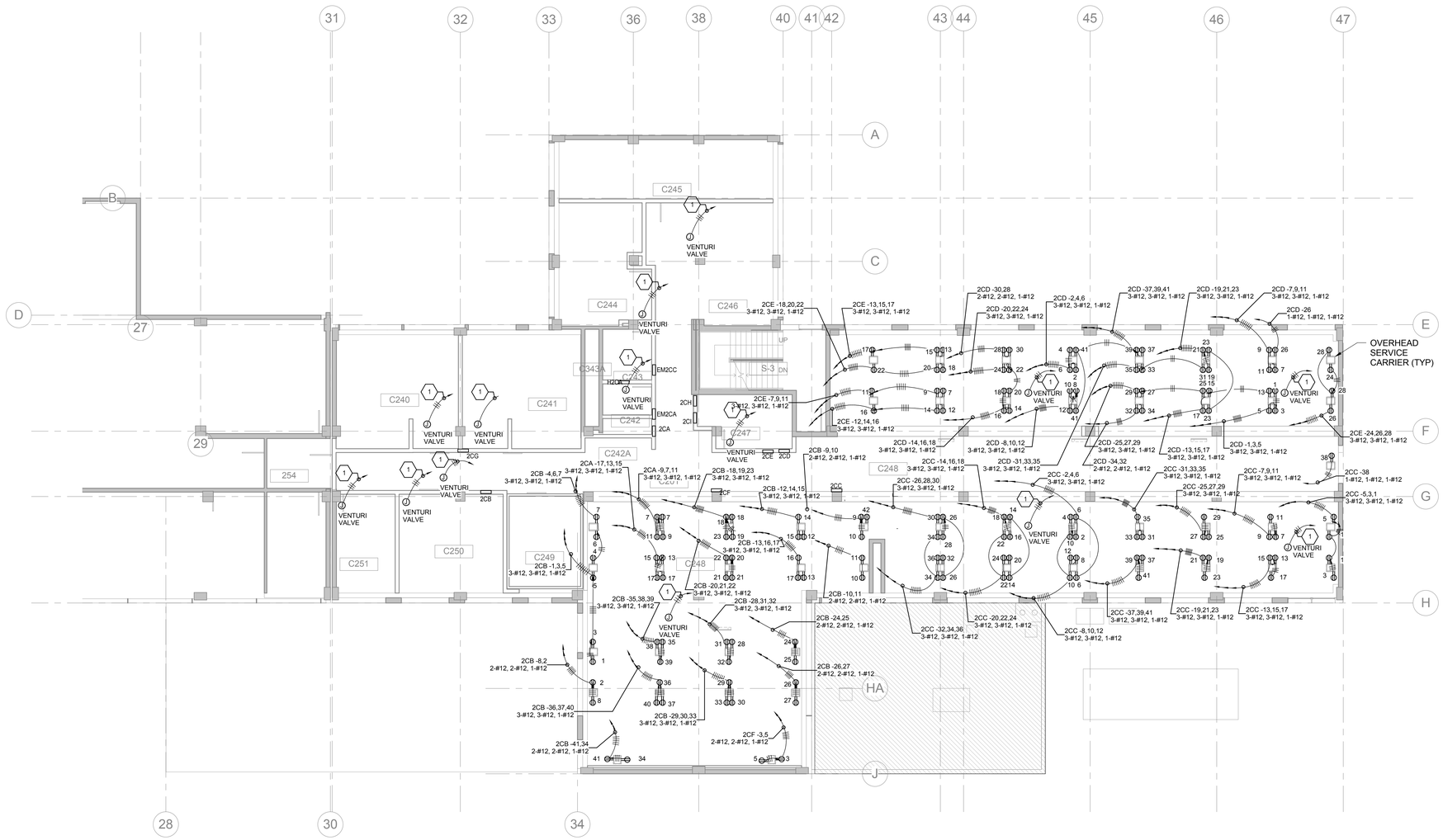

KEY NOTES:

1. PROVIDE CONTROL TRANSFORMERS FOR VENTURI CONTROL VALVE AND SHALL BE CIRCUITED FROM PANEL EM2CC CIRCUIT #15. PROVIDE 1#12, 1#12, 1#12 WIRE AND 3/4"C. CONTRACTOR SHALL PROVIDE LOW VOLTAGE POWER TO VAV TERMINAL UNIT FROM VAV TRANSFORMER. PROVIDE MOTOR RATED DISCONNECT SWITCH. COORDINATE WITH MECHANICAL CONTRACTOR FOR EXACT LOCATION.

SHEET NOTES:

1. CONTRACTOR TO PROVIDE OUTLETS PER CIRCUIT ON EACH OVERHEAD SERVICE CARRIER.
2. REFER TO MECHANICAL DRAWINGS FOR EQUIPMENT SPECIFICATION AND LOCATION.

0' 8' 16' 32'

NORTH

FINAL BID DOCUMENTS

HILLIARD ARCHITECTS INC. COPYRIGHT

Revisions:	Date

CONSULTANTS:

SYSKA HENNESSY GROUP
A member company of SH Group, Inc.

Syska Hennessy Group, Inc.
425 California Street
Suite 700
San Francisco, CA 94104
Tel: 415.288.9060
Fax: 415.835.0385
www.syska.com

REGISTERED PROFESSIONAL ENGINEER
VICTOR G. STEFFN
No. 11872
Exp. 12/31/14
ELECTRICAL
STATE OF CALIFORNIA

ARCHITECT/ENGINEERS:

ESTABLISHED 1988 HILLIARD ARCHITECTS GOING GREEN

HILLIARD ARCHITECTS, INC
251 Post Street, Suite 620
San Francisco, CA 94108-5017
Tel 415 989 6400, Fax 415 989 3056
www.HilliardArchitects.com

Drawing Title: **OVERHEAD POWER PLAN - 2ND FLOOR**

Approved: Project Director

Project Title: **VA PA BLDG 6 LAB RENOVATION**

Location: **VAPAHCS, PALO ALTO CAMPUS 3801 MIRANDA AVE. PALO ALTO, CA 94304**

Date: **04.17.2014** | Checked: **HP** | Drawn: **HP**

Project Number: **640-13-121P**

Building Number: **6**

Drawing Number: **EP104**

Dwg. of

Office of Construction and Facilities Management

Department of Veterans Affairs

VA FORM 08-6231

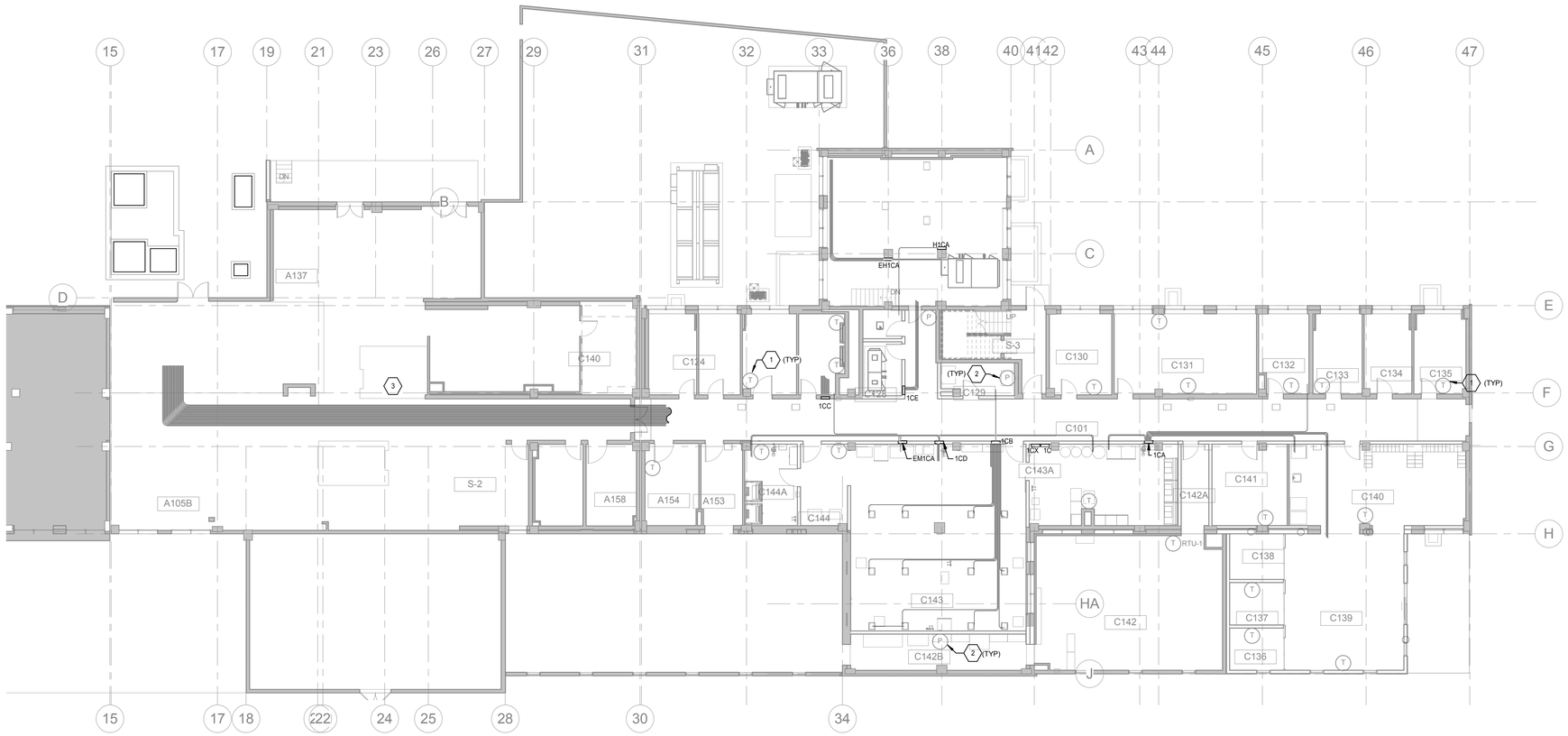

1 ROUTING POWER PLAN-1ST FLOOR
3/32" = 1'-0"

KEY NOTES:

1. CONTRACTOR TO PROVIDE 3/4" C.O. FOR THERMOSTAT. COORDINATE WITH MECHANICAL FOR EXACT LOCATION.
2. CONTRACTOR TO PROVIDE 3/4" C.O. FOR DIFFERENTIAL PRESSURE SENSOR. COORDINATE WITH MECHANICAL FOR EXACT LOCATION.
3. FEEDERS ARE COMING FROM ELECTRICAL ROOM. SEE SHEET 401 AND REFER TO E702. FOR CONNECTION.

SHEET NOTES:

0' 8' 16' 32'

NORTH

FINAL BID DOCUMENTS

HILLIARD ARCHITECTS INC. COPYRIGHT

Revisions:	Date

CONSULTANTS:

SYSKA HENNESSY GROUP
A member company of SH Group, Inc.

Syska Hennessy Group, Inc.
425 California Street
Suite 700
San Francisco, CA 94104
Tel: 415.288.9060
Fax: 415.835.0385
www.syska.com

REGISTERED PROFESSIONAL ENGINEER
VICTOR G. STEFFEN
No. 11872
Exp. 12/31/14
ELECTRICAL
STATE OF CALIFORNIA

ARCHITECT/ENGINEERS:

ESTABLISHED 1988 HILLIARD ARCHITECTS GOING GREEN

HILLIARD ARCHITECTS, INC
251 Post Street, Suite 620
San Francisco, CA 94108-5017
Tel 415 989 6400, Fax 415 989 3056
www.HilliardArchitects.com

Drawing Title	**ROUTING POWER PLAN - 1ST FLOOR**
Approved: Project Director	
Project Title	**VA PA BLDG 6 LAB RENOVATION**
Location	**VAPAHCS, PALO ALTO CAMPUS 3801 MIRANDA AVE. PALO ALTO, CA 94304**
Date	**04.17.2014**
Checked	**Author**
Drawn	**Author**
Project Number	**640-13-121P**
Building Number	**6**
Drawing Number	**EP105**
Dwg. of	

Office of Construction and Facilities Management

Department of Veterans Affairs

VA FORM 08-6231

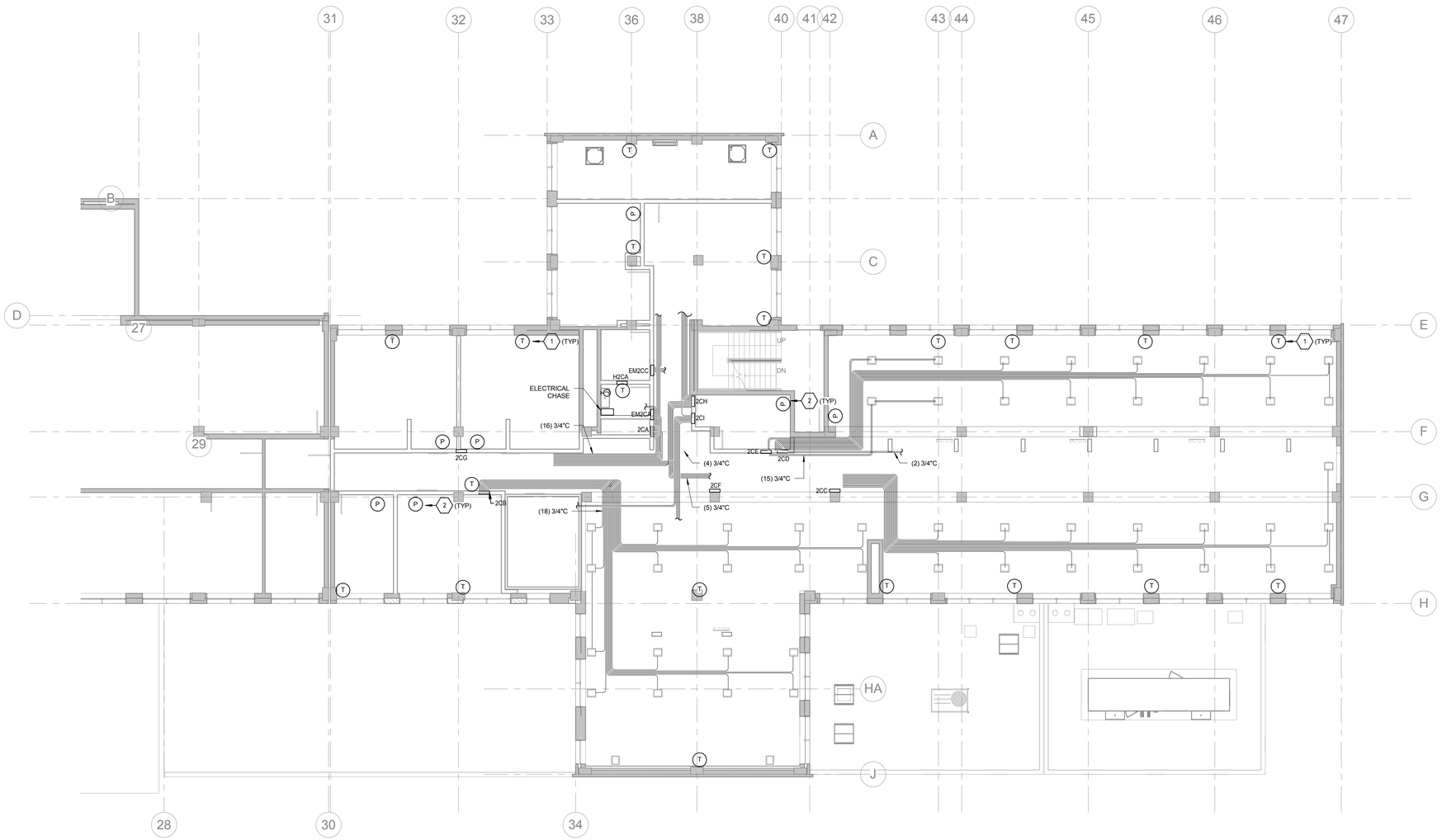

KEY NOTES:

1. CONTRACTOR TO PROVIDE 3/4" C.O. FOR THERMOSTAT. COORDINATE WITH MECHANICAL FOR EXACT LOCATION.
2. CONTRACTOR TO PROVIDE 3/4" C.O. FOR DIFFERENTIAL PRESSURE SENSOR. COORDINATE WITH MECHANICAL FOR EXACT LOCATION.

SHEET NOTES:

0' 8' 16' 32'

NORTH

FINAL BID DOCUMENTS

HILLIARD ARCHITECTS INC. COPYRIGHT

Revisions:	Date

CONSULTANTS:

SYSKA HENNESSY GROUP
A member company of SH Group, Inc.

Syska Hennessy Group, Inc.
425 California Street
Suite 700
San Francisco, CA 94104
Tel: 415.288.9060
Fax: 415.835.0385
www.syska.com

REGISTERED PROFESSIONAL ENGINEER
VICTOR G. STEFFIN
No. 11872
Exp. 12/31/14
ELECTRICAL
STATE OF CALIFORNIA

ARCHITECT/ENGINEERS:

ESTABLISHED 1988 HILLIARD ARCHITECTS GOING GREEN

HILLIARD ARCHITECTS, INC
251 Post Street, Suite 620
San Francisco, CA 94108-5017
Tel 415 989 6400, Fax 415 989 3056
www.HilliardArchitects.com

Drawing Title
ROUTING POWER PLAN - 2ND FLOOR

Approved: Project Director

Project Title
VA PA BLDG 6 LAB RENOVATION

Location
VAPAHCS, PALO ALTO CAMPUS
3801 MIRANDA AVE. PALO ALTO, CA 94304

Date **04.17.2014** | Checked **Author** | Drawn **Author**

Project Number **640-13-121P**

Building Number

Drawing Number **EP106**

Dwg. of

Office of Construction and Facilities Management

Department of Veterans Affairs

VA FORM 08-6231

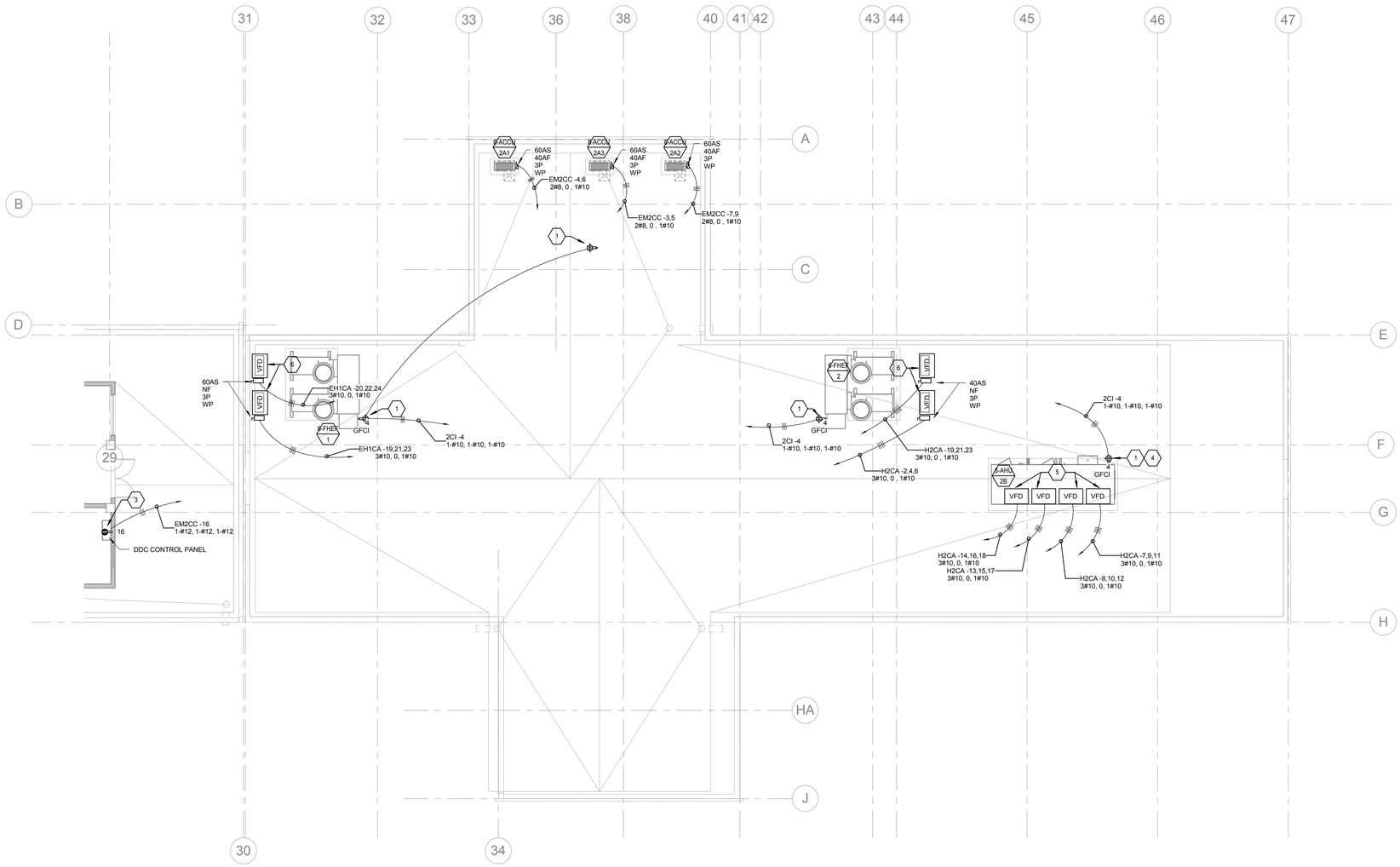

KEY NOTES:

1. PROVIDE WP GFCI 20A DUPLEX OUTLET AND NEMA3R WEATHERPROOF ENCLOSURE. RECEPTACLE SHALL BE MOUNTED ON A SUPPORT ASSEMBLY SHOWN IN E501A DETAIL# 3 AND 4.
2. PROVIDE UNISTRUT SUPPORT FOR PROTECTIVE EQUIPMENT AND DEVICE, IF NECESSARY.
3. PROVIDE 120V POWER TO CONTROL PANEL. COORDINATE WITH MECHANICAL CONTRACTOR FOR PANEL LOCATION.
4. EXTEND WIRE TO POWER LIGHT FIXTURES INSIDE THE AIR HANDLING UNIT. CONTRACTOR TO FIELD VERIFY QUANTITY AND EXACT LOCATION.
5. VFD ASSOCIATED TO THE AIR HANDLING UNIT HAS A SINGLE POINT POWER CONNECTION. COORDINATE WITH MECHANICAL CONTRACTOR FOR EXACT TERMINATION POINT.
6. VFD ASSOCIATED TO THE EXHAUST FAN HAS A SINGLE POINT OF CONNECTION. COORDINATE WITH MECHANICAL CONTRACTOR FOR EXACT TERMINATION POINT.

SHEET NOTES:

1. CIRCUITS ARE FED FROM 2ND FLOOR EM PANELS
2. CONTRACTOR TO PROVIDE 3/4" C.O. FOR DDC CONTROL TIE IN FOR THE FOLLOWING EQUIPMENT: 6-AHU-2B, 6-FHEF-1, 6-FHEF-2, 6-ACCU-2A1, 6-ACCU-2A2, AND 6-ACCU-2A3. COORDINATE WITH CONTROLS CONTRACTOR FOR EXACT TERMINATION POINT. LOW VOLTAGE WIRING SHALL BE PROVIDED BY CONTROLS CONTRACTOR.
3. ALL ROOF TOP CONDUITS SHALL BE EMT TYPE CONDUITS.

0' 8' 16' 32'

NORTH

FINAL BID DOCUMENTS

HILLIARD ARCHITECTS INC. COPYRIGHT

Revisions: Date

CONSULTANTS:

SYSKA HENNESSY GROUP
A member company of SH Group, Inc.

Syska Hennessy Group, Inc.
425 California Street
Suite 700
San Francisco, CA 94104
Tel: 415.288.9060
Fax: 415.835.0385
www.syska.com

REGISTERED PROFESSIONAL ENGINEER
VICTOR G. STEFFEN
No. 11872
Exp. 12/31/14
ELECTRICAL
STATE OF CALIFORNIA

ARCHITECT/ENGINEERS:

ESTABLISHED 1988 HILLIARD ARCHITECTS GOING GREEN

HILLIARD ARCHITECTS, INC
251 Post Street, Suite 620
San Francisco, CA 94108-5017
Tel 415 989 6400, Fax 415 989 3056
www.HilliardArchitects.com

Drawing Title	**POWER PLAN - ROOF**
Approved: Project Director	
Project Title	**VA PA BLDG 6 LAB RENOVATION**
Location	**VAPAHCS, PALO ALTO CAMPUS 3801 MIRANDA AVE. PALO ALTO, CA 94304**
Date	**04.17.2014**
Checked	**Author**
Drawn	**Author**
Project Number	**640-13-121P**
Building Number	**6**
Drawing Number	**EP107**
Dwg. of	

Office of Construction and Facilities Management

Department of Veterans Affairs

VA FORM 08-6231

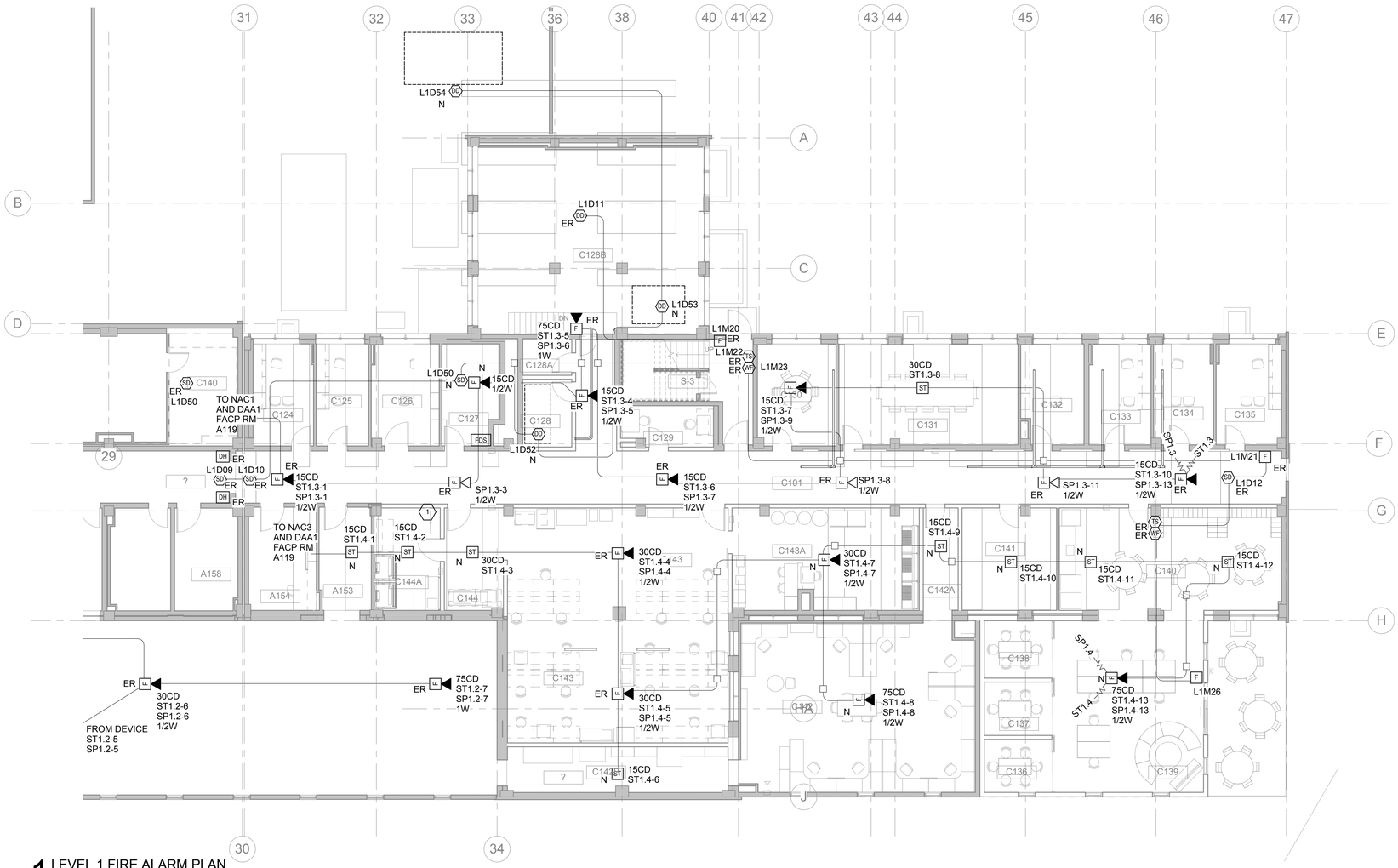

1 LEVEL 1 FIRE ALARM PLAN
1/8" = 1'-0"

KEY NOTES:

SHEET NOTES:

1. WIRE RUNS ON FLOOR PLANS ARE SHOWN DIAGRAMATICALLY. EXACT LOCATION OF ALL WIRE RUNS TO BE DETERMINED AND RECORDED AS AS BUILT IN FIELD.
2. MINIMUM 3/4" CONDUIT.
3. THE FIRE ALARM SYSTEM SHALL COMPLY WITH ARTICLE 760 OF NATIONAL ELECTRICAL CODE AND NFPA 72.
4. AN APPROVED SET OF FIRE ALARM SHOP DRAWINGS SHALL BE ON SITE AND USED FOR INSTALLATION.
5. UPON COMPLETION OF THE INSTALLATION OF THE FIRE ALARM SYSTEM. THE CONTRACTOR SHALL COORDINATE WITH OTHER TRADES TO TEST INTERCONNECTIONS OF THE FIRE ALRAM SYSTEM WITH OTHER BUILDING SYSTEMS AND VERIFY EQUIPMENT. ONCE ALL FUNCTIONS INDICATED IN THE FIRE ALARM SYSTEM SEQUENCE OPERATIONS HAVE BEEN VEIFIED THROUGH TESTING, AN ACCEPTANCE TEST MUST BE PERFORMED IN THE PRESENCE OF THE LIFE SAFETY ENGINEER OR REPRESENTATIVE.
6. THE BUILDING GENERATORS SHALL PROVIDE SECONDARY SOURE OF POWER FOR FIRE ALARM SYSTEM.
7. EXISTING INTERFACE TO FAN CONTROL/ELEVATOR CAPTURE TO BE REUSED.
8. FIRE ALARM NETWORK VOICE AND DATA TO BE FIBER OPTIC.
9. EXISTING DUCT DETECTOR LOCATION REUSED ASSUMED TO BE PROPERLY LOCATED.
10. ADDITIONAL NEW DUCT DETECTORS NOT SHOWN. SELECT AND EXTEND NEW CIRCUITS, PROVIDED VOLTAGE DROP AND BATTERY LOAD ARE ACCEPTABLE.
11. DURING FIRE, SHUTDOWN THE FOLLOWING:

SYMBOL NOMENCLATURE

ER = EXISTING DEVICE TO BE REUSED
N = NEW DEVICE
X = EXISTING DEVICE TO BE REMOVED
WP = WEATHERPOOF DEVICE

0' 8' 16' 32'

NORTH

FINAL BID DOCUMENTS

HILLIARD ARCHITECTS INC. COPYRIGHT

Revisions:	Date

CONSULTANTS:

SYSKA HENNESSY GROUP
A member company of SH Group, Inc.

Syska Hennessy Group, Inc.
425 California Street
Suite 700
San Francisco, CA 94104
Tel: 415.288.9060
Fax: 415.835.0385
www.syska.com

REGISTERED PROFESSIONAL ENGINEER
VICTOR G. STEFFEN
No. 11872
Exp. 12/31/14
ELECTRICAL
STATE OF CALIFORNIA

ARCHITECT/ENGINEERS:

ESTABLISHED 1988 HILLIARD ARCHITECTS GOING GREEN

HILLIARD ARCHITECTS, INC
251 Post Street, Suite 620
San Francisco, CA 94108-5017
Tel 415 989 6400, Fax 415 989 3056
www.HilliardArchitects.com

Drawing Title	**FIRE ALARM PLAN - 1ST FLOOR**
Approved: Project Director	
Project Title	**VA PA BLDG 6 LAB RENOVATION**
Location	**VAPAHCS, PALO ALTO CAMPUS 3801 MIRANDA AVE. PALO ALTO, CA 94304**
Date	**04.17.2014**
Checked	**Author**
Drawn	**Author**
Project Number	**640-13-121P**
Building Number	**6**
Drawing Number	**FA101**
Dwg. of	

Office of Construction and Facilities Management

Department of Veterans Affairs

VA FORM 08-6231

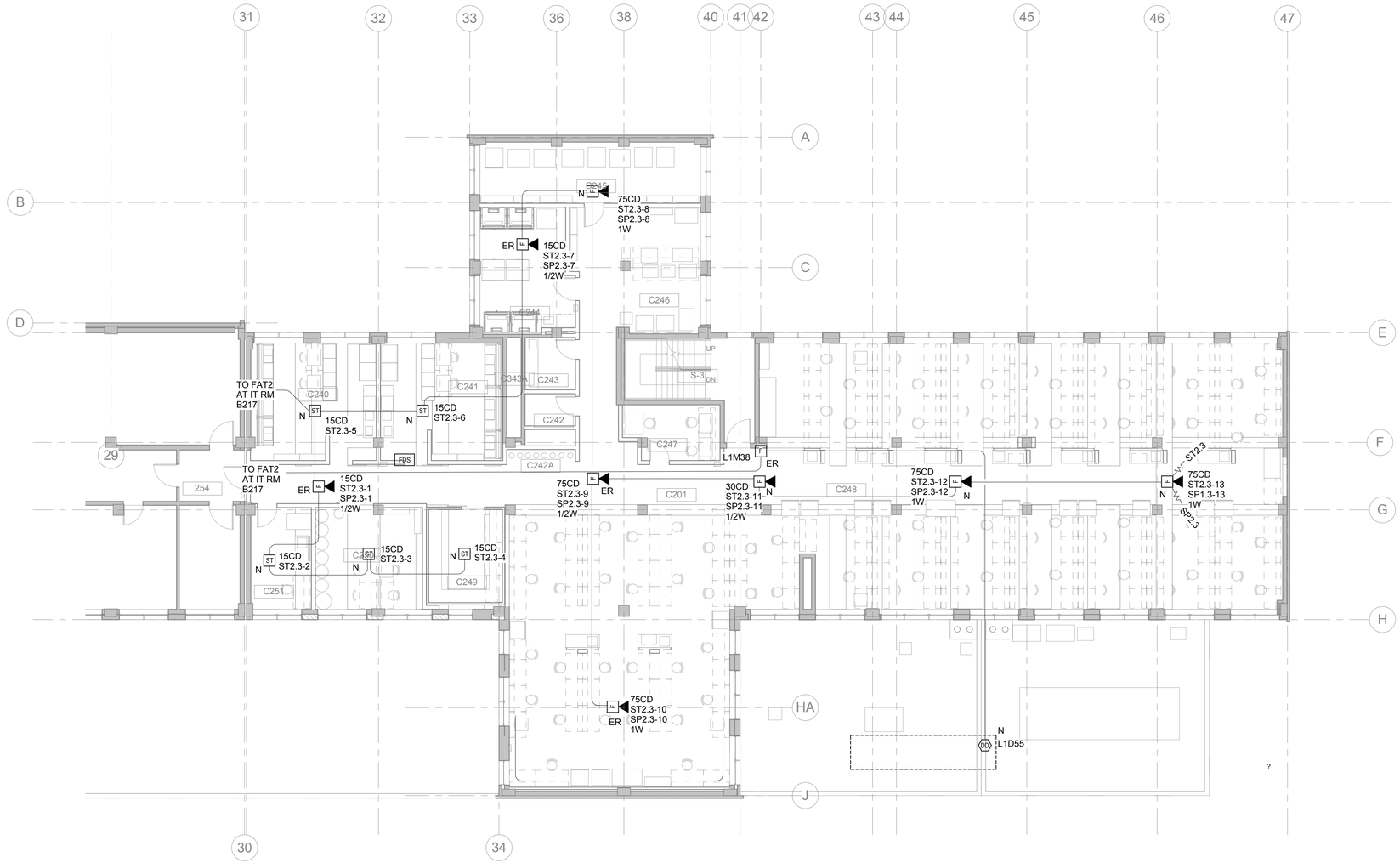

KEY NOTES:

SHEET NOTES:

1. WIRE RUNS ON FLOOR PLANS ARE SHOWN DIAGRAMATICALLY. EXACT LOCATICALLIF WIRE RUNS TO BE DETERMINED AND RECORDED AS AS BUILT IN FIELD.
2. MINIMUM 3/4" CONDUIT.
3. THE FIRE ALARM SYSTEM SHALL COMPLY WITH ARTICLE 760 OF NATIONAL ELECTRICAL CODE AND NFPA 72.
4. AN APPROVED SET OF FIRE ALARM SHOP DRAWINGS SHALL BE ON SITE AND USED FOR INSTALLATION.
5. UPON COMPLETION OF THE INSTALLATION OF THE FIRE ALARM SYSTEM. THE CONTRACTOR SHALL COORDINATE WITH OTHER TRADES TO TEST INTERCONNECTIONS OF THE FIRE ALARM SYSTEM WITH OTHER BUILDING SYSTEMS AND VERIFY EQUIPMENT. ONCE ALL FUNCTIONS INDICATED IN THE FIRE ALARM SYSTEM SEQUENCE OPERATIONS HAVE BEEN VEIFIED THROUGH TESTING, AN ACCEPTANCE TEST MUST BE PERFORMED IN THE PRESENCE OF THE LIFE SAFETY ENGINEER OR REPRESENTATIVE.
6. THE BUILDING GENERATORS SHALL PROVIDE SECONDARY SOURE OF POWER FOR FIRE ALARM SYSTEM.
7. EXISTING INTERFACE TO FAN CONTROL/ELEVATOR CAPTURE TO BE REUSED.
8. FIRE ALARM NETWORK VOICE AND DATA TO BE FIBER OPTIC.
9. EXISTING DUCT DETECTOR LOCATION REUSED ASSUMED TO BE PROPERLY LOCATED.
10. ADDITIONAL NEW DUCT DETECTORS NOT SHOWN. SELECT AND EXTEND NEW CIRCUITS, PROVIDED VOLTAGE DROP AND BATTERY LOAD ARE ACCEPTABLE.

SYMBOL NOMENCLATURE

ER = EXISTING DEVICE TO BE REUSED
N = NEW DEVICE
X = EXISTING DEVICE TO BE REMOVED
WP = WEATHERPOOF DEVICE

0' 8' 16' 32'

NORTH

FINAL BID DOCUMENTS

HILLIARD ARCHITECTS INC. COPYRIGHT

Revisions:	Date

CONSULTANTS:

SYSKA HENNESSY GROUP
A member company of SH Group, Inc.

Syska Hennessy Group, Inc.
425 California Street
Suite 700
San Francisco, CA 94104
Tel: 415.288.9060
Fax: 415.835.0385
www.syska.com

REGISTERED PROFESSIONAL ENGINEER
VICTOR G. STEFFIN
No. 11872
Exp. 12/31/14
ELECTRICAL
STATE OF CALIFORNIA

ARCHITECT/ENGINEERS:

ESTABLISHED 1988 HILLIARD ARCHITECTS GOING GREEN

HILLIARD ARCHITECTS, INC
251 Post Street, Suite 620
San Francisco, CA 94108-5017
Tel 415 989 6400, Fax 415 989 3056
www.HilliardArchitects.com

Drawing Title
FIRE ALARM PLAN - 2ND FLOOR

Approved: Project Director

Project Title
VA PA BLDG 6 LAB RENOVATION

Location
VAPAHCS, PALO ALTO CAMPUS
3801 MIRANDA AVE. PALO ALTO, CA 94304

Date **04.17.2014** | Checked **Author** | Drawn **Author**

Project Number **640-13-121P**

Building Number **6**

Drawing Number **FA102**

Dwg. of

Office of Construction and Facilities Management

Department of Veterans Affairs

VA FORM 08-6231

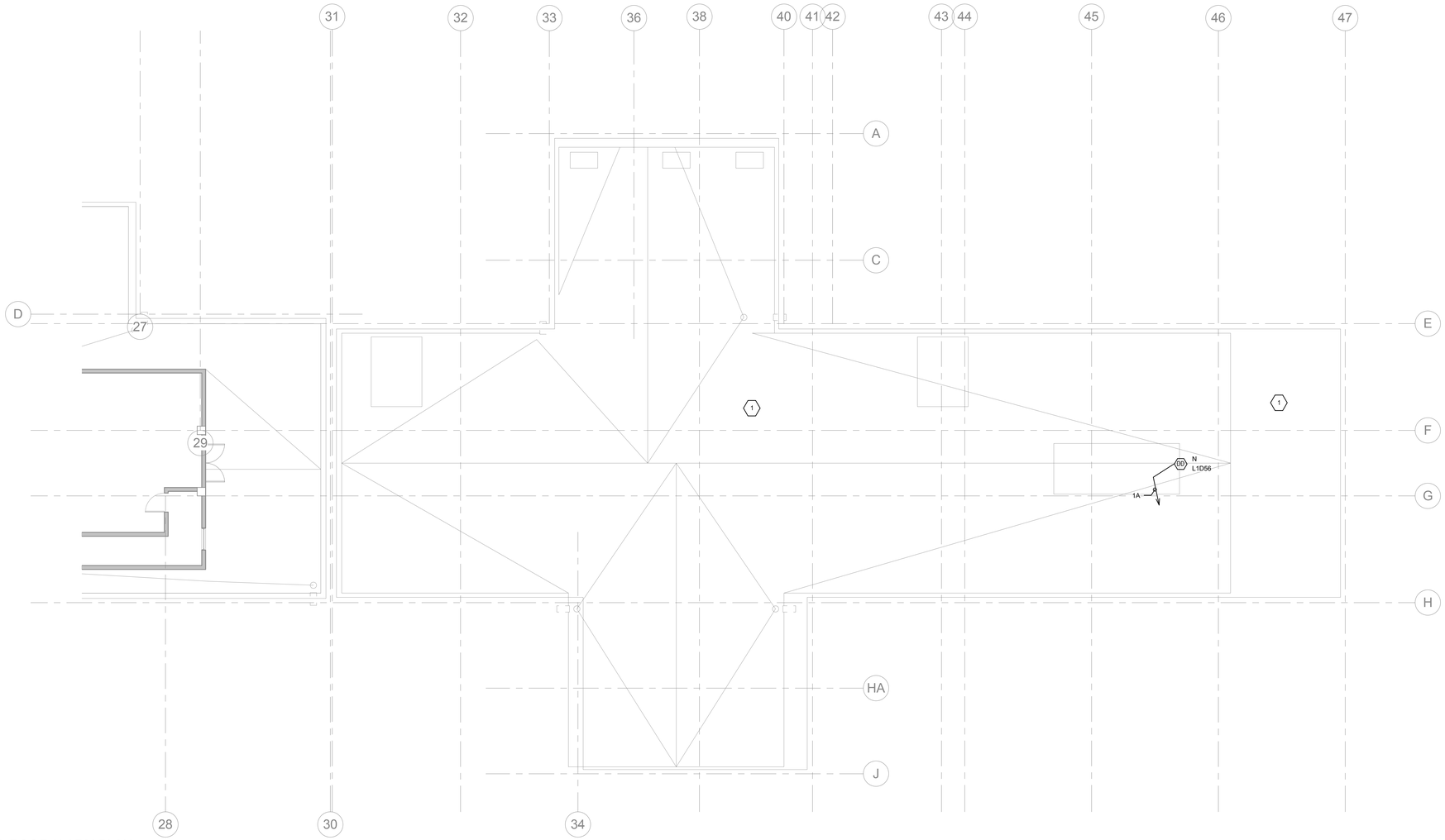

1 ROOF ALARM PLAN
1/8" = 1'-0"

KEY NOTES:

1. EXISTING TO REMAIN AIR HANDLING UNITS AND ASSOCIATED DUCT SMOKE DETECTORS ARE LOCATED IN THIS AREA, BUT NOT SHOWN IN NEW WORK PLAN.

SHEET NOTES:

SYMBOL NOMENCLATURE

ER = EXISTING DEVICE TO BE REUSED
N = NEW DEVICE
X = EXISTING DEVICE TO BE REMOVED
WP = WEATHERPOOF DEVICE

0' 8' 16' 32'

NORTH

FINAL BID DOCUMENTS

HILLIARD ARCHITECTS INC. COPYRIGHT

Revisions:	Date

CONSULTANTS:

REGISTERED PROFESSIONAL ENGINEER
VICTOR G. STEFFEN
No. 11872
Exp. 12/31/14
ELECTRICAL
STATE OF CALIFORNIA

ARCHITECT/ENGINEERS:

ESTABLISHED 1988 HILLIARD ARCHITECTS GOING GREEN

HILLIARD ARCHITECTS, INC
251 Post Street, Suite 620
San Francisco, CA 94108-5017
Tel 415 989 6400, Fax 415 989 3056
www.HilliardArchitects.com

Drawing Title: **FIRE ALARM PLAN - ROOF**

Approved: Project Director

Project Title: **VA PA BLDG 6 ADMINISTRATIVE EXPANSION**

Location: **VAPAHCS, PALO ALTO CAMPUS 3801 MIRANDA AVE. PALO ALTO, CA 94304**

Date: **04.17.2014** | Checked: **SHG** | Drawn: **Author**

Project Number: **640-13-121P**

Building Number: **6**

Drawing Number: **FA103**

Dwg. of

Office of Construction and Facilities Management

Department of Veterans Affairs

VA FORM 08-6231

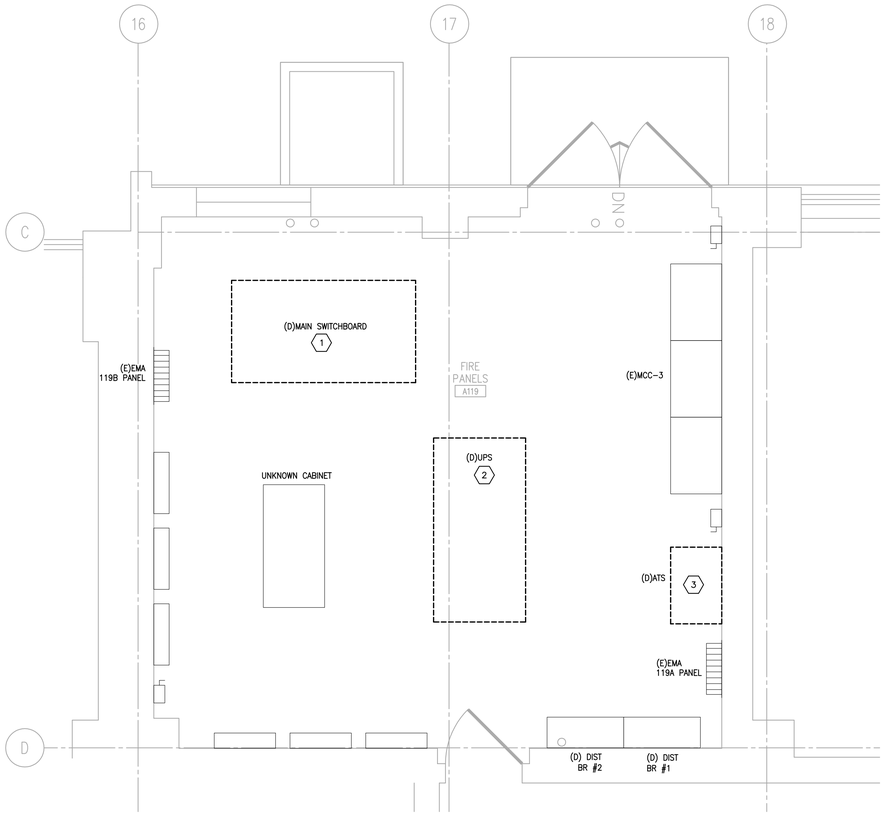

01 ENLARGED MAIN ELECTRICAL ROOM
POWER PLAN - DEMO
SCALE: 1/2" = 1'-0"

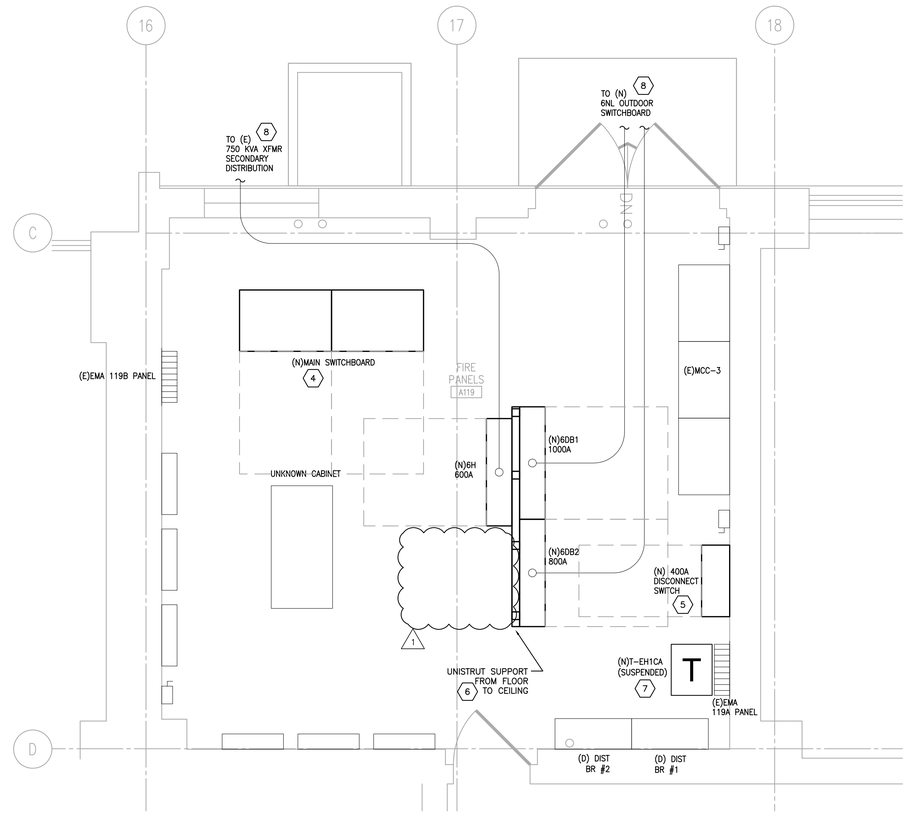

02 ENLARGED MAIN ELECTRICAL ROOM
POWER PLAN - NEW WORK
SCALE: 1/2" = 1'-0"

KEY NOTES:

1. (E) MAIN SWITCHBOARD TO BE DEMOLISHED.
2. (E) UPS SYSTEM TO BE DEMOLISHED.
3. (E) ATS TO BE DEMOLISHED.
4. (N) MAIN SWITCHBOARD. COORDINATE EXACT LOCATION IN THE FIELD TO ENSURE THAT FINAL INSTALLATION WILL ALLOW FOR THE REUSE OF (E) CONDUIT AND CONDUCTORS THAT HAVE BEEN DISCONNECTED AS A RESULT OF THE DEMOLITION OF THE (E) MAIN SWITCHBOARD.
5. (N) 400A DISCONNECT SWITCH. COORDINATE EXACT LOCATION IN THE FIELD SO THAT FINAL INSTALLATION WILL ALLOW FOR THE REUSE OF (E) CONDUIT AND CONDUCTORS SERVING DEMOLISHED ATS. INTERCEPT (E) CONDUIT AND CONDUCTORS.
6. COORDINATE EXACT REQUIREMENTS FOR UNISTRUT RACK WITH STRUCTURAL ENGINEER.
7. COORDINATE REQUIREMENTS FOR SUSPENDED TRANSFORMER ASSEMBLY AND HARDWARE WITH STRUCTURAL ENGINEER.
8. REFER TO ES100 FOR CONTINUATION.

SHEET NOTES:

1. CONTRACTOR TO CIRCUIT TRACE ALL EXISTING CIRCUITS RELATED TO ELECTRICAL EQUIPMENT SHOWN AS BEING DEMOLISHED.
2. REFER TO SINGLE LINE DIAGRAMS FOR ADDITIONAL INFORMATION.
3. REFER TO SHEET E505 FOR SWITCHBOARD ELEVATION DETAILS.

0' 2' 4' 8' NORTH

FINAL BID DOCUMENTS

HILLIARD ARCHITECTS INC. COPYRIGHT 2008

Revisions:	Date
Revision 1	05.02.2014

CONSULTANTS:

SYSKA HENNESSY GROUP
A member company of SH Group, Inc.
Syska Hennessy Group, Inc.
425 California Street
Suite 700
San Francisco, CA 94104
Tel: 415.288.9060
Fax: 415.835.0385
www.syska.com

REGISTERED PROFESSIONAL ENGINEER
VICTOR G. STUFFEN
No. 11872
Exp. 12/31/14
ELECTRICAL
STATE OF CALIFORNIA

ARCHITECT/ENGINEERS:

ESTABLISHED 1988 HILLIARD ARCHITECTS GOING GREEN
HILLIARD ARCHITECTS, INC
251 Post Street, Suite 620
San Francisco, CA 94108-5017
Tel 415 989 6400, Fax 415 989 3056
www.HilliardArchitects.com

Drawing Title	ENLARGED MAIN ELECTRICAL ROOM POWER PLAN
Approved: Project Director	
Project Title	VA PA BLDG 6 LAB RENOVATION
Location	VAPAHCS - PALO ALTO CAMPUS 3801 MIRANDA AVE, PALO ALTO, CA 94304
Date	04.17.14
Checked	HP
Drawn	AF
Project Number	640-13-121P
Building Number	6
Drawing Number	E401
Dwg. - of -	

Office of Construction and Facilities Management
Department of Veterans Affairs

VA FORM 08-6231

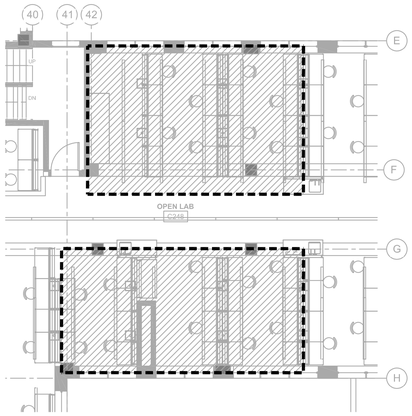

LIGHTING CONTROL ZONE 3 - 2ND FLOOR (10)

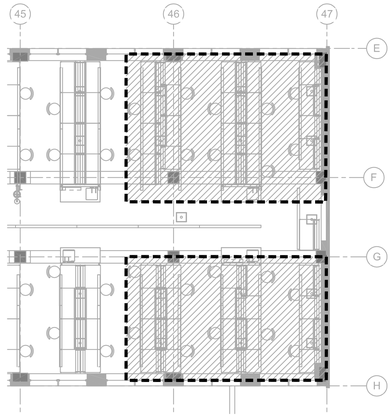

LIGHTING CONTROL ZONE 1 - 2ND FLOOR (7)

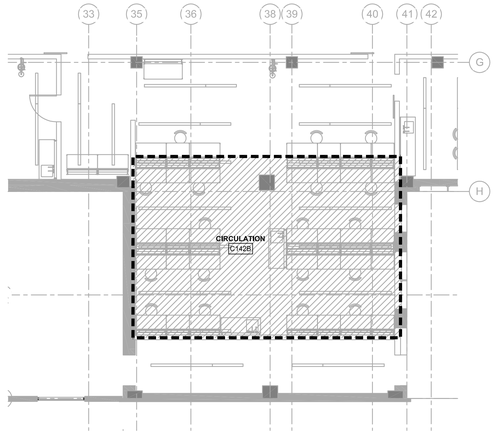

LIGHTING CONTROL ZONE 2 - 1ST FLOOR (4)

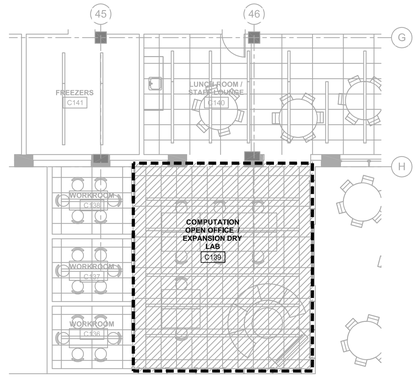

LIGHTING CONTROL ZONE 1 - 1ST FLOOR (1)

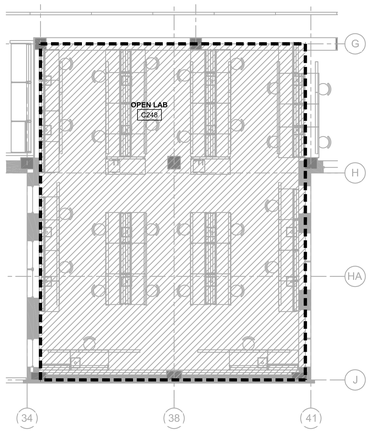

LIGHTING CONTROL ZONE 4 - 2ND FLOOR (11)

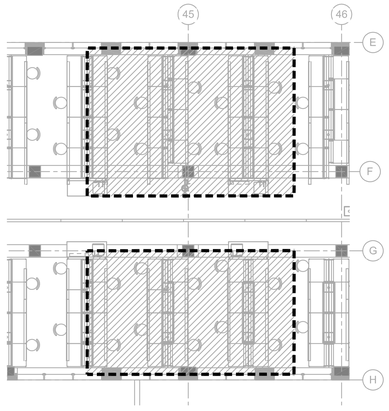

LIGHTING CONTROL ZONE 2 - 2ND FLOOR (8)

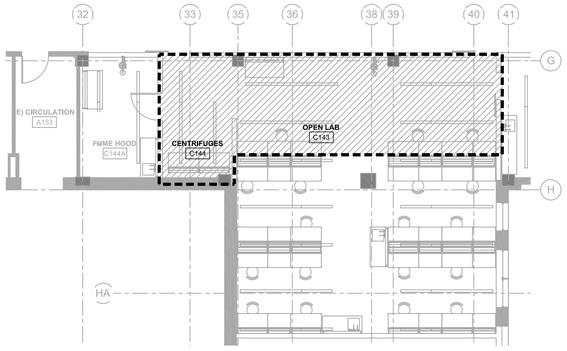

LIGHTING CONTROL ZONE 3 - 1ST FLOOR (5)

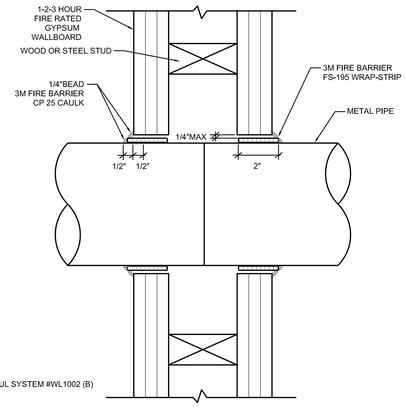

FIREPROOFING THROUGH GYPSUM WALL (2)

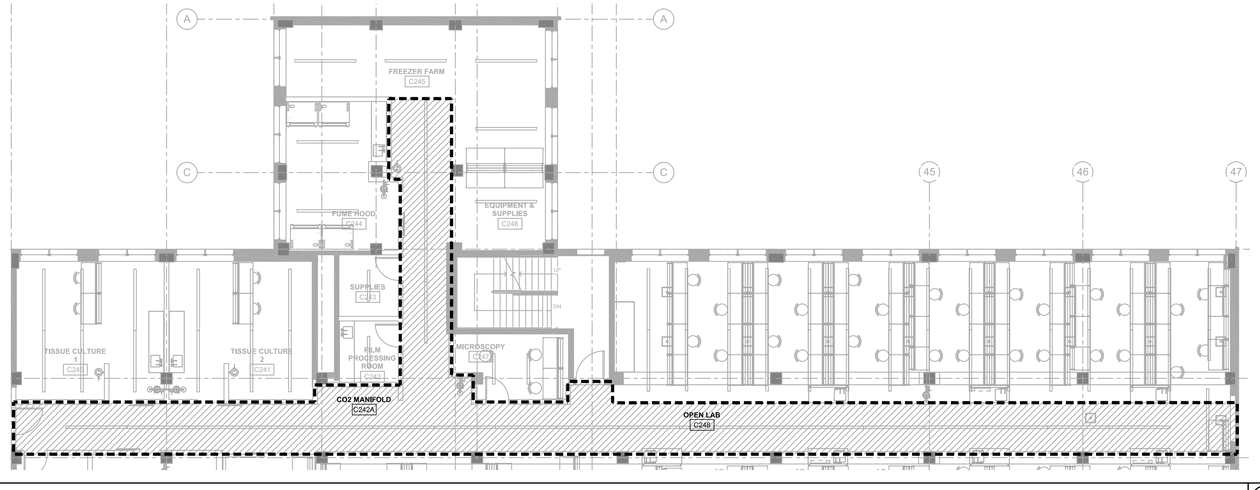

LIGHTING CONTROL ZONE 5 - 2ND FLOOR (9)

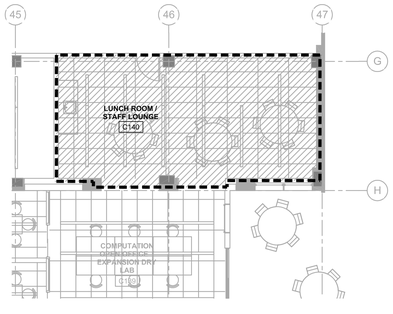

LIGHTING CONTROL ZONE 4 - 1ST FLOOR (6)

SPECIAL NOTE:
FIRE PUTTY IS NOT REQUIRED IF ONLY ONE BOX IS INSTALLED ON EITHER SIDE OF 100 SF OF WALL.

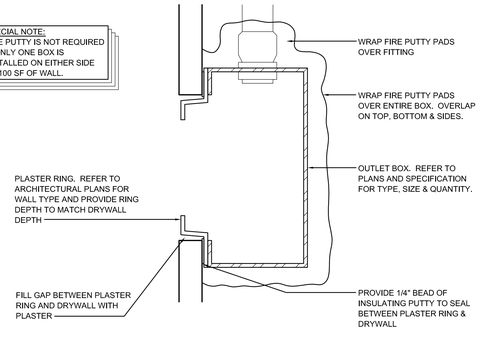

OUTLET BOX INSTALLATION IN FIRE RATED PARTITION (3)

FINAL BID DOCUMENTS

HILLIARD ARCHITECTS INC. COPYRIGHT 2008

ISSUED AS 60% PROGRESS SET	11.01.2013
Revisions:	Date

CONSULTANTS:

SYSKA HENNESSY GROUP
A member company of SH Group, Inc.

Syska Hennessy Group, Inc.
425 California Street
Suite 700
San Francisco, CA 94104
Tel: 415.288.9060
Fax: 415.835.0385
www.syska.com

REGISTERED PROFESSIONAL ENGINEER
VICTOR G. STUTEN
No. 11872
Exp. 12/31/14
ELECTRICAL
STATE OF CALIFORNIA

ARCHITECT/ENGINEERS:

ESTABLISHED 1988 HILLIARD ARCHITECTS GOING GREEN

HILLIARD ARCHITECTS, INC
251 Post Street, Suite 620
San Francisco, CA 94108-5017
Tel 415 989 6400, Fax 415 989 3056
www.HilliardArchitects.com

Drawing Title: **ELECTRICAL DETAILS**

Approved: Project Director

Project Title: **VA PA BLDG 6 LAB RENOVATION**

Project Number: **640-13-121P**

Building Number: **6**

Location: **VAPAHCS - PALO ALTO CAMPUS 3801 MIRANDA AVE, PALO ALTO, CA 94304**

Date: **04.17.2014** | Checked: **HP** | Drawn: **AF**

Drawing Number: **E501**

Dwg. - of -

Office of Construction and Facilities Management

Department of Veterans Affairs

VA FORM 08-6231

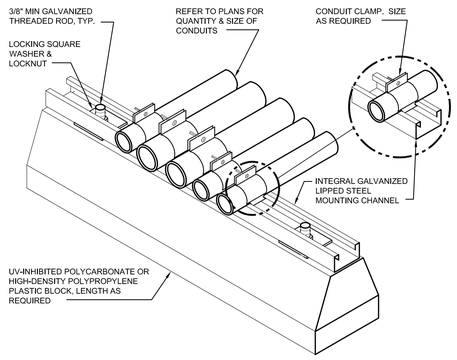

ROOF CONDUIT SUPPORT DETAIL (10)

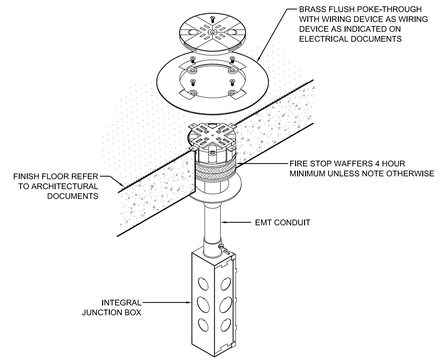

FIRE RATED POKE THRU INSTALLATION (7)

NOTES:

1. SWIVEL AND STEM HANGER AT FEED POINTS. SWIVEL TO PROVIDE 45 OF SWIVEL IN ANY DIRECTION.
2. PENDANT MOUNT FIXTURE.
3. UNIVERSAL SWIVEL AT FIXTURE TO PROVIDE 45° OF SWIVEL IN ANY DIRECTION.
4. OUTLET BOX AT FEED LOCATIONS. BOX TO BE SUPPORTED TO WITHSTAND LOADS DURING INSTALLATION AND RELAMPING. BOX TO BE SUPPORTED INDEPENDANTLY OF CEILING.
5. COORDINATE STEM LENGTH WITH FIXTURE MOUNTING HEIGHT AND CEILING HEIGHT.
6. THREADED ROD FOR SUPPLEMENTAL SUPORTS.
7. AIR CRAFT CABLE WHERE REQUIRED TO BE CONNECTED TO THREADED ROD BY CABLE RETAINER. CABLE TO HAVE ADJUSTABLE CABLE RETAINER FOR FINAL FIELD ADJUSTMENTS.

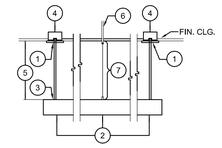

PENDANT FIXTURE INSTALLATION (4)

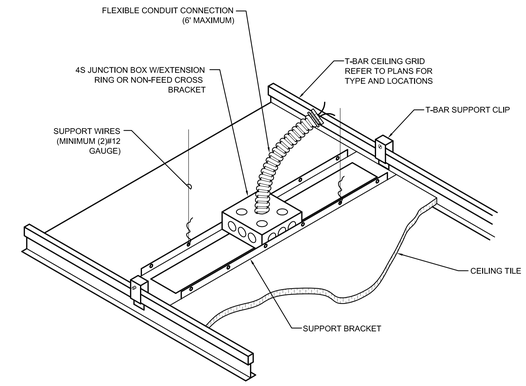

T-BAR CEILING OUTLET INSTALLATION (1)

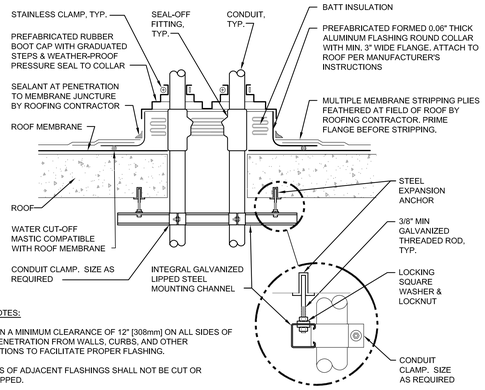

GENERAL NOTES:

1. MAINTAIN A MINIMUM CLEARANCE OF 12" [308mm] ON ALL SIDES OF ROOF PENETRATION FROM WALLS, CURBS, AND OTHER PROJECTIONS TO FACILITATE PROPER FLASHING.
2. FLANGES OF ADJACENT FLASHINGS SHALL NOT BE CUT OR OVERLAPPED.
3. VERIFY ROOF & STRUCTURAL SYSTEM WITH ARCHITECT.
4. COORDINATE FLASHING INSTALLATION WITH ROOFING CONTRACTOR TO ENSURE PROPER METHODS & MATERIALS ARE USED TO MAINTAIN ROOF WARRANTY.

ROOF PENETRATION DETAIL (11)

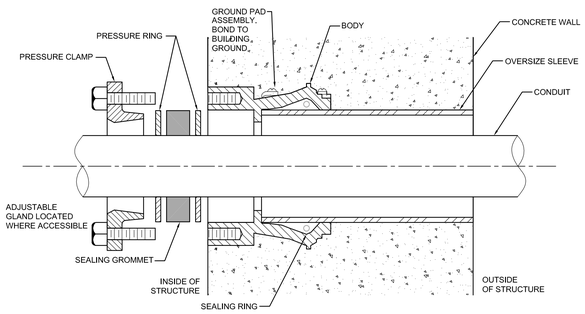

NOTE:
USE WATERTIGHT CONDUIT SEAL WHERE CONDUIT PENETRATIONS OF BUILDING EXTERIOR WALLS ARE BELOW GRADE AND FOR TUNNEL PENETRATIONS.

WATER TIGHT CONDUIT SEAL (8)

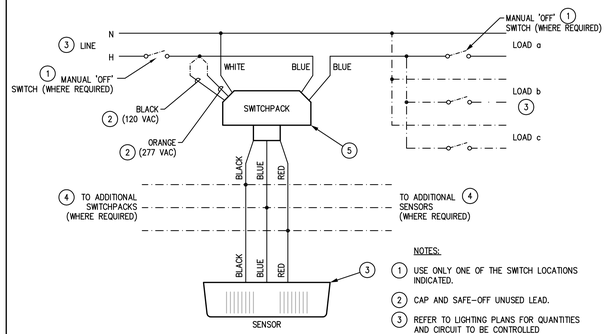

NOTES:

1. USE ONLY ONE OF THE SWITCH LOCATIONS INDICATED.
2. CAP AND SAFE-OFF UNUSED LEAD.
3. REFER TO LIGHTING PLANS FOR QUANTITIES AND CIRCUIT TO BE CONTROLLED
4. COORDINATE MAXIMUM ALLOWED WITH SUPPLIER.
5. PROVIDE A SWITCHPACK FOR EACH ADDITIONAL CIRCUIT TO BE CONTROLLED.

OCCUPANCY SENSOR WIRING DIAGRAM MULTIPLE SWITCHES (5)

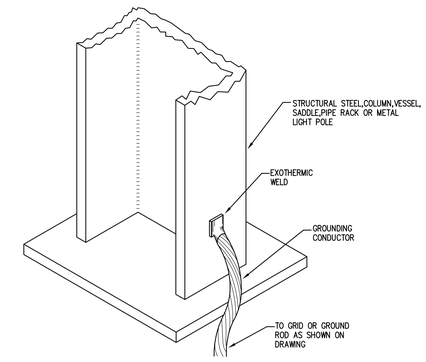

BUILDING STEEL GROUND (EXOTHERMIC) (2)

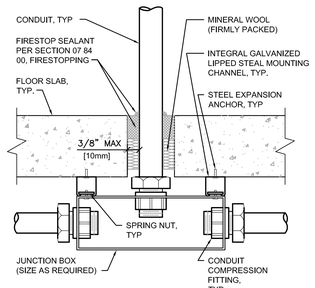

FLOOR STUB PENETRATION DETAIL (12)

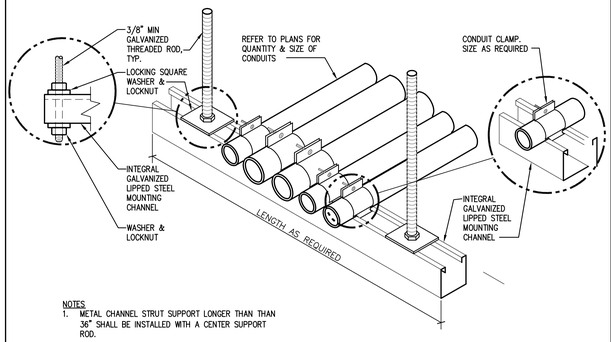

NOTES

1. METAL CHANNEL STRUT SUPPORT LONGER THAN THAN 36" SHALL BE INSTALLED WITH A CENTER SUPPORT ROD.
2. FASTEN THREADED ROD TO STRUCTURE BY APPROVED METHOD PER SPECIFICATION 26 0533, RACEWAYS AND BOXES FOR ELECTRICAL SYSTEMS. FIELD VERIFY EXACT CONDITIONS.
3. FOR TRAPEZE INSTALLATIONS IN SEISMIC AREAS REFER TO SPECIFICATION SECTION 10 05 41, SEISMIC RESTRAINT REQUIREMENTS FOR NON-STRUCTURAL COMPONENTS.

CONDUIT PRAPEZE MOUNTING DETAIL (9)

GENERAL NOTES

1. ALL HARDWARE SHOWN SHALL BE STAINLESS STEEL.
2. PROVIDE 1 MOUNTING POINT PER 12" OF BAR LENGTH.
3. HOLES MAY BE ADDED IF REQUIRED.

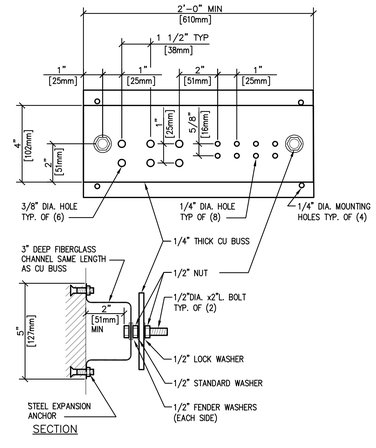

GROUNDING BAR DETAIL (6)

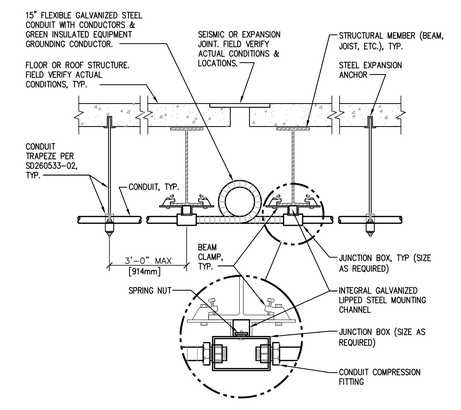

CONDUIT JOINT CROSSING DETAIL (3)

FINAL BID DOCUMENTS

HILLIARD ARCHITECTS INC. COPYRIGHT 2008

ISSUED AS 60% PROGRESS SET	11.01.2013
Revisions:	Date

CONSULTANTS:

SYSKA HENNESSY GROUP
A member company of SH Group, Inc.
Syska Hennessy Group, Inc.
425 California Street
Suite 700
San Francisco, CA 94104
Tel: 415.288.9060
Fax: 415.835.0385
www.syska.com

REGISTERED PROFESSIONAL ENGINEER VICTOR G. STUFFEN No. 11872 Exp.12/31/14 ELECTRICAL STATE OF CALIFORNIA

ARCHITECT/ENGINEERS:

ESTABLISHED 1988 HILLIARD ARCHITECTS GOING GREEN
HILLIARD ARCHITECTS, INC
251 Post Street, Suite 620
San Francisco, CA 94108-5017
Tel 415 989 6400, Fax 415 989 3056
www.HilliardArchitects.com

Drawing Title: ELECTRICAL DETAILS	Project Title: VA PA BLDG 6 LAB RENOVATION	Project Number: 640-13-121P	Office of Construction and Facilities Management
Approved: Project Director	Location: VAPAHCS - PALO ALTO CAMPUS, 3801 MIRANDA AVE, PALO ALTO, CA 94304	Building Number: 6	
	Date: 04.17.2014 / Checked: HP / Drawn: AF	Drawing Number: E502	Department of Veterans Affairs
		Dwg. - of -	

VA FORM 08-6231

BATTERY CALCULATIONS

FOR: VA PALO ALTO, BUILDING 6
PROJECT: 13-0021
Panel Number: NFS-3030

DESIGN PARAMETERS: Standby Hours - 24; Alarm Minutes - 5

Qty	Description	STANDBY CURRENT EACH		STANDBY CURRENT TOTAL	Qty	ALARM CURRENT EACH		ALARM CURRENT TOTAL
	CONTROL PANEL							
1	CPU2-3030D	x 0.120	=	0.12	1	x 0.120	=	0.12
1	with display and keyboard	x 0.220	=	0.22	1	x 0.220	=	0.22
1	UDACT	x 0.040	=	0.04	1	x 0.100	=	0.1
1	LCD-160	x 0.300	=	0.3	1	x 0.325	=	0.325
1	HS-NCM-SF	x 0.400	=	0.4	1	x 0.400	=	0.4
1	DVC-EM	x 0.440	=	0.44	1	x 0.440	=	0.44
1	CMIC-1	x 0.020	=	0.02	1	x 0.060	=	0.06
1	LEM-320	x 0.100	=	0.1	1	x 0.100	=	0.1
1	LCM-320	x 0.130	=	0.13	1	x 0.130	=	0.13
						Sub-Total	a	1.895
	INITIATING DEVICES							
31	FSP-851 SMOKE DETECTOR	x 0.000300	=	0.00930	31	x 0.006500	=	0.2015
6	DNR DUCT DETECTOR	x 0.000570	=	0.00342	6	x 0.013000	=	0.078
3	FST-851 HEAT DETECTOR	x 0.000300	=	0.00090	3	x 0.006500	=	0.0195
18	NBG-12LX PULL STATION	x 0.000375	=	0.00675	18	x 0.000500	=	0.009
16	FMM-1 MONITOR MODULE(E)	x 0.000375	=	0.006	16	x 0.005100	=	0.0816
7	FRM-1 RELAY CONTROL MODULE	x 0.000270	=	0.00189	7	x 0.006500	=	0.0455
1	FCM-1 CONTROL MODULE	x 0.000390	=	0.00039	1	x 0.006500	=	0.0065
		x 0.000000	=	0	0	x 0.000000	=	0
						Sub-Total	b	0.4416
	OUTPUT DEVICES							
						Sub-Total	c	0
	NOTIFICATION APPLIANCES							
0		x	=	0	0	x 0.040	=	0
0		x	=	0	0	x 0.000	=	0
						Sub-Total	d	0
	Misc. Devices							
	ELECTROMAGNETIC DOOR HOLDERS	x 0.02	=	0	0	x	=	0
0	END OF LINE RELAYS	x 0.015	=	0	0	x 0.015	=	0
						Sub-Total	e	0

Total Standby Current 1.79865
Standby Hours x 24
Standby AH Required 43.1676

Total Panel Component Alarm Current a 1.895
Total Initiating Devices b 0.4416
Total Output Device Alarm Current c 0
Total Indicating Appliance Alarm Current d 0
Total Miscellaneous Device Alarm Current e 0
Total Alarm Current 2.3366

Alarm Hours(5 min. ÷ 60 min.) x 0.08333333

Alarm AH Required 0.194717 <-------- 0.19471667
Standby AH Required + 43.1676
Total Current Needs = 43.36233
Derate by 20% x 1.2
Battery Size Required = 52.03478 Amp Hours

INTREPID will provide (a minimum of) two: 12 V 55 Ampere Hour Batteryes NFS-3030

BATTERY CALCULATIONS

FOR: FCPS#1, VA Bldg 6 1st floor
PROJECT: 13-0021
Panel Number: Power Supply - FCPS-24S8

DESIGN PARAMETERS: Standby Hours - 24; Alarm Minutes - 5

Qty	Description	STANDBY CURRENT EACH		STANDBY CURRENT TOTAL	Qty	ALARM CURRENT EACH		ALARM CURRENT TOTAL
	Power Supply							
1	FCPS-24S8	x 0.091	=	0.0910	1	x 0.145	=	0.145
						Sub-Total	a	0.145
	INITIATING DEVICES - SLC LOOP							
0		x 0.000000	=	0.0000	0	x 0.000000	=	0
						Sub-Total	b	0
	OUTPUT DEVICES							
0		x 0.000390	=	0.0000	0	x 0.006500	=	0
						Sub-Total	c	0
	INDICATING APPLIANCE							
27	System Sensor Strobe 15cd	x	=	0.0000	27	x 0.066	=	1.782
5	System Sensor Strobe 30cd	x	=	0.0000	5	x 0.094	=	0.47
4	System Sensor Strobe 75cd	x	=	0.0000	4	x 0.158	=	0.632
1	System Sensor Strobe 110cd	x	=	0.0000	1	x 0.202	=	0.202
						Sub-Total	d	3.086
	Misc. Devices							
2	ELECTROMAGNETIC DOOR HOLDERS	x 0.02	=	0.0400	2	x	=	0
						Sub-Total	e	0

Total Standby Current 0.1310
Standby Hours x 24.0000
Standby AH Required 3.1440

Total Panel Component Alarm Current a 0.145
Total Initiating Devices b 0
Total Output Device Alarm Current c 0
Total Indicating Appliance Alarm Current d 3.086
Total Miscellaneous Device Alarm Current e 0
Total Alarm Current 3.231

Alarm Hours(5 min. ÷ 60 min.) x 0.08333333

Alarm AH Required 0.26925 <-------- 0.26925
Standby AH Required + 3.144
Total Current Needs = 3.41325
Derate by 20% x 1.2
Battery Size Required = 4.0959 Amp Hours

Intrepid will provide (a minimum of) two: 12v 12 Amp Hour Batt's @ Panel: Power Supply - FCPS-24S8

BATTERY CALCULATIONS

FOR: FCPS#2, VA Bldg 6 2nd floor
PROJECT: 13-0021
Panel Number: Power Supply - FCPS-24S8

DESIGN PARAMETERS: Standby Hours - 24; Alarm Minutes - 5

Qty	Description	STANDBY CURRENT EACH		STANDBY CURRENT TOTAL	Qty	ALARM CURRENT EACH		ALARM CURRENT TOTAL
	Power Supply							
1	FCPS-24S8	x 0.091	=	0.0910	1	x 0.145	=	0.145
						Sub-Total	a	0.145
	INITIATING DEVICES - SLC LOOP							
0		x 0.000000	=	0.0000	0	x 0.000000	=	0
						Sub-Total	b	0
	OUTPUT DEVICES							
0		x 0.000390	=	0.0000	0	x 0.006500	=	0
						Sub-Total	c	0
	INDICATING APPLIANCE							
31	System Sensor Strobe 15cd	x	=	0.0000	31	x 0.066	=	2.046
5	System Sensor Strobe 30cd	x	=	0.0000	5	x 0.094	=	0.47
4	System Sensor Strobe 75cd	x	=	0.0000	4	x 0.158	=	0.632
						Sub-Total	d	3.148
	Misc. Devices							
2	ELECTROMAGNETIC DOOR HOLDERS	x 0.02	=	0.0400	2	x	=	0
						Sub-Total	e	0

Total Standby Current 0.1310
Standby Hours x 24.0000
Standby AH Required 3.1440

Total Panel Component Alarm Current a 0.145
Total Initiating Devices b 0
Total Output Device Alarm Current c 0
Total Indicating Appliance Alarm Current d 3.148
Total Miscellaneous Device Alarm Current e 0
Total Alarm Current 3.293

Alarm Hours(5 min. ÷ 60 min.) x 0.08333333

Alarm AH Required 0.274417 <-------- 0.27441667
Standby AH Required + 3.144
Total Current Needs = 3.418417
Derate by 20% x 1.2
Battery Size Required = 4.1021 Amp Hours

Intrepid will provide (a minimum of) two: 12v 12 Amp Hour Batt's @ Panel: Power Supply - FCPS-24S8

BATTERY CALCULATIONS

FOR: FCPS#3, VA Bldg 6 3rd floor
PROJECT: 13-0021
Panel Number: Power Supply - FCPS-24S8

DESIGN PARAMETERS: Standby Hours - 24; Alarm Minutes - 5

Qty	Description	STANDBY CURRENT EACH		STANDBY CURRENT TOTAL	Qty	ALARM CURRENT EACH		ALARM CURRENT TOTAL
	Power Supply							
1	FCPS-24S8	x 0.091	=	0.0910	1	x 0.145	=	0.145
						Sub-Total	a	0.145
	INITIATING DEVICES - SLC LOOP							
0		x 0.000000	=	0.0000	0	x 0.000000	=	0
						Sub-Total	b	0
	OUTPUT DEVICES							
0		x 0.000390	=	0.0000	0	x 0.006500	=	0
						Sub-Total	c	0
	INDICATING APPLIANCE							
28	System Sensor Strobe 15cd	x	=	0.0000	28	x 0.066	=	1.848
1	System Sensor Strobe 30cd	x	=	0.0000	1	x 0.094	=	0.094
2	System Sensor Strobe 75cd	x	=	0.0000	2	x 0.158	=	0.316
1	System Sensor Strobe 135cd	x	=	0.0000	1	x 0.228	=	0.228
						Sub-Total	d	2.486
	Misc. Devices							
2	ELECTROMAGNETIC DOOR HOLDERS	x 0.02	=	0.0400	2	x	=	0
						Sub-Total	e	0

Total Standby Current 0.1310
Standby Hours x 24.0000
Standby AH Required 3.1440

Total Panel Component Alarm Current a 0.145
Total Initiating Devices b 0
Total Output Device Alarm Current c 0
Total Indicating Appliance Alarm Current d 2.486
Total Miscellaneous Device Alarm Current e 0
Total Alarm Current 2.631

Alarm Hours(5 min. ÷ 60 min.) x 0.08333333

Alarm AH Required 0.21925 <-------- 0.21925
Standby AH Required + 3.144
Total Current Needs = 3.36325
Derate by 20% x 1.2
Battery Size Required = 4.0359 Amp Hours

Intrepid will provide (a minimum of) two: 12v 12 Amp Hour Batt's @ Panel: Power Supply - FCPS-24S8

BATTERY CALCULATIONS

FOR: VAPA Building 6, DAA-1-3
PROJECT: 13-0021
Panel Number: DAA-5070 Digital Audio Amplifier

DESIGN PARAMETERS: Standby Hours - 24; Alarm Minutes - 15

Qty	Description	STANDBY CURRENT EACH		STANDBY CURRENT TOTAL	Qty	ALARM CURRENT EACH		ALARM CURRENT TOTAL
	Power Supply							
3	DAA	x 0.350	=	1.0500	3	x 0.600	=	1.8
						Sub-Total	a	1.8
	SPEAKERS							
103	1/2 WATT	x	=	0.0000	103	x 0.032	=	3.296
7	1 WATT	x	=	0.0000	7	x 0.064	=	0.448
1	2 WATT	x	=	0.0000	1	x 0.132	=	0.132
						Sub-Total	b	3.876
	Misc. Devices							
	END OF LINE RELAYS	x 0.015	=	0.0000	0	x 0.015	=	0
						Sub-Total	c	0

Total Standby Current 1.0500
Standby Hours x 24.0000
Standby AH Required 25.2000

Total Panel Component Alarm Current a 1.8
Total Speakers Alarm Current b 3.876
Total Miscellaneous Device Alarm Current c 0
Total Alarm Current 5.676

Alarm Hours(15 min. ÷ 60 min.) x 0.25

Alarm AH Required 1.419 <-------- 1.419
Standby AH Required + 25.2
Total Current Needs = 26.619
Derate by 20% x 1.2
Battery Size Required = 31.9428 Amp Hours

Intrepid will provide (a minimum of) two: 55 Amp Hour Batt's @ Panel: DAA-5070 Digital Audio Amplifier

HILLIARD ARCHITECTS INC. COPYRIGHT 2008

FINAL BID DOCUMENTS

Revisions:	Date
ISSUED AS 60% PROGRESS SET	11.01.2013

CONSULTANTS:

SYSKA HENNESSY GROUP
A member company of SH Group, Inc.

Syska Hennessy Group, Inc.
425 California Street
Suite 700
San Francisco, CA 94104
Tel: 415.288.9060
Fax: 415.835.0385
www.syska.com

REGISTERED PROFESSIONAL ENGINEER — VICTOR G. STEFFEN — No. 11872 — Exp. 12/31/14 — ELECTRICAL — STATE OF CALIFORNIA

ARCHITECT/ENGINEERS:

HILLIARD ARCHITECTS — ESTABLISHED 1988 — GOING GREEN

HILLIARD ARCHITECTS, INC
251 Post Street, Suite 620
San Francisco, CA 94108-5017
Tel 415 989 6400, Fax 415 989 3056
www.HilliardArchitects.com

Drawing Title: **ELECTRICAL DETAILS**

Approved: Project Director

Project Title: **VA PA BLDG 6 LAB RENOVATION**

Location: VAPAHCS - PALO ALTO CAMPUS, 3801 MIRANDA AVE, PALO ALTO, CA 94304

Date: 04.17.2014 | Checked: HP | Drawn: AF

Project Number: 640-13-121P
Building Number: 6
Drawing Number: E503
Dwg. - of -

Office of Construction and Facilities Management
Department of Veterans Affairs

VA FORM 08-6231

Voltage Drop Calculations

VOLTAGE DROP FOR A GIVEN LENGTH OF CONDUCTOR = I x FEET X 21.6 / C.M

WHERE: I = AMPERES PER TERMINAL OF LOAD

FEET = ONE WAY DISTANCE IN FEET MEASURED FROM SOURCE OF SUPPLY TO LOAD

21.6 = CONSTANT (RESISTANCE OF CONDUCTOR @ 10.8 OHMS L.M. FOR TWICE THE LENGTH

C.M. = CROSS SECTION AREA IS RECTANGULAR MILS (SEE CHART BELOW)

WIRE SIZE (AWS)	14	16	18	20
CIRCULAR MILS (C.M.)	4110	2580	1620	1020

SYSTEM SENSOR

Circuit Number	Circuit Description	STROBE 15cd 0.066	30cd 0.094	75cd 0.158	110cd 0.202	135cd 0.228	Total Dev.	Distance / foot	12 AWS WIRE	Volts dropped	Volts at End	% Volt Drop
ST1.1	Bldg 6 1st Floor	9	2	2	1		1.300	535	6530	2.301	21.699	9.59%
ST1.2	Bldg 6 1st Floor	10	2	1			1.006	410	6530	1.364	22.636	5.68%
ST1.3	**Bldg 6 1st Floor**	**8**	1	**1**			**0.780**	**490**	**6530**	**1.264**	**22.736**	**5.27%**
ST1.4	**Bldg 6 1st Floor**	**8**	4	**1**			**1.062**	**500**	**6530**	**1.756**	**22.244**	**7.32%**
ST2.1	Bldg 6 2nd Floor	12	4				1.168	575	6530	2.222	21.778	9.26%
ST2.2	Bldg 6 2nd Floor	11					0.726	380	6530	0.913	23.087	3.80%
ST2.3	**Bldg 6 2nd Floor**	**8**	1	**4**			**1.254**	**525**	**6530**	**2.178**	**21.822**	**9.07%**
ST3.1	Bldg 6 3rd Floor	8		1			0.686	435	6530	0.987	23.013	4.11%
ST3.2	Bldg 6 3rd Floor	9					0.594	330	6530	0.648	23.352	2.70%
ST3.3	Bldg 6 3rd Floor	11	1	1			0.978	615	6530	1.990	22.010	8.29%
ST3.4	Bldg 6 penthouse					1	0.228	525	6530	0.396	23.604	1.65%

VOLTAGE DROP CALCULATION SPEAKER CIRCUIT SP1.3

QTY	MODEL #	DESCRIPTION	CURRENT DRAW EACH	CURRENT DRAW TOTAL
		DEVICES		
13	SPEAKER --1/2W	SPEAKER TAPPED @1/2 WATT	0.032	0.416
1	SPEAKER --1W	SPEAKER TAPPED @1 WATT	0.064	0.064
Total	7 1/2 W	TOTAL CIRCUIT CURRENT		0.48
		DISTANCE TO LAST DEVICE IN CIRCUIT(FEET)		490
		WIRE GAUGE		16
		TOTAL CIRCUIT VOLTAGE DROP(FORMULA: V=IP)		2.39
		CIRCUIT VOLTAGE		70
		PERCENT VOLTAGE DROP		3.41%

VOLTAGE DROP CALCULATION SPEAKER CIRCUIT SP1.4

QTY	MODEL #	DESCRIPTION	CURRENT DRAW EACH	CURRENT DRAW TOTAL
		DEVICES		
13	SPEAKER --1/2W	SPEAKER TAPPED @1/2 WATT	0.032	0.416
Total	7 1/2 W	TOTAL CIRCUIT CURRENT		0.416
		DISTANCE TO LAST DEVICE IN CIRCUIT(FEET)		490
		WIRE GAUGE		16
		TOTAL CIRCUIT VOLTAGE DROP(FORMULA: V=IP)		2.07
		CIRCUIT VOLTAGE		70
		PERCENT VOLTAGE DROP		2.96%

VOLTAGE DROP CALCULATION SPEAKER CIRCUIT SP2.3

QTY	MODEL #	DESCRIPTION	CURRENT DRAW EACH	CURRENT DRAW TOTAL
		DEVICES		
9	SPEAKER --1/2W	SPEAKER TAPPED @1/2 WATT	0.032	0.288
4	SPEAKER --1W	SPEAKER TAPPED @1 WATT	0.064	0.256
Total	6.5 W	TOTAL CIRCUIT CURRENT		0.544
		DISTANCE TO LAST DEVICE IN CIRCUIT(FEET)		650
		WIRE GAUGE		16
		TOTAL CIRCUIT VOLTAGE DROP(FORMULA: V=IP)		3.59
		CIRCUIT VOLTAGE		70
		PERCENT VOLTAGE DROP		5.13%

BUILDING 6, - SEQUENCE OF OPERATION (EXISTING)

INPUT \ OUTPUT	Indicate alarm signal at FACP, Bldg 100 Police Office, Bldg 40 and Bldg 41	Indicate trouble signal at FACP, Bldg 100 police Office, Bldg 40 and Bldg 41	Indicate supervisory signal at FACP, Bldg 100 police Office, Bldg 40 and Bldg 41	Activate audible alarm throughout building	activate strobes throughout building	Transmit signal to central station monitoring service (Supervisory, Trouble as appropriate) through UDACT at Police station	Close smoke barrier doors on the floor of alarm origin	Close associated fire door being held open	Shut down associated air handler	Close associated dampers	Recall elevator to primary floor	Recall elevator to alternate floor	Flash elevator warning lamp
Manuel Fire Alarm Station	●			●	●	●	●						
Sprinkler Waterflow / Pressure Switch	●			●	●	●	●						
Tamper Switch/PIV			●										
Area Smoke Detector	●			●	●	●	●						
Door Release Smoke Detector	●			●	●	●	●	●		●			
Duct Smoke Detector			●			●			●	●			
Smoke Detector at Primary Recall Floor Elevator Lobby	●			●	●	●	●					●	
Smoke Detector at Elevator Lobby Other Than at Primary Floor	●			●	●	●	●				●		
Elevator Machine Room Smoke Detector	●			●	●	●	●				●		●
Loss of Power to FACP		●				●							
Wiring Short or Open Circuit		●				●							
General System Trouble		●				●							

Voice message will be preceded by a tone alert. No less than three rounds of voice message will be used for staff notification.

Manual operation of the voice system will override all automatic voice messages.

HILLIARD ARCHITECTS INC. COPYRIGHT 2008

FINAL BID DOCUMENTS

Revisions:	Date
ISSUED AS 60% PROGRESS SET	11.01.2013

CONSULTANTS:

SYSKA HENNESSY GROUP
A member company of SH Group, Inc.

Syska Hennessy Group, Inc.
425 California Street
Suite 700
San Francisco, CA 94104
Tel: 415.288.9060
Fax: 415.835.0385
www.syska.com

REGISTERED PROFESSIONAL ENGINEER
VICTOR G. STEFFEN
No. 11872
Exp. 12/31/14
ELECTRICAL
STATE OF CALIFORNIA

ARCHITECT/ENGINEERS:

ESTABLISHED 1988 HILLIARD ARCHITECTS GOING GREEN

HILLIARD ARCHITECTS, INC
251 Post Street, Suite 620
San Francisco, CA 94108-5017
Tel 415 989 6400, Fax 415 989 3056
www.HilliardArchitects.com

Drawing Title: **ELECTRICAL DETAILS**

Approved: Project Director

Project Title: **VA PA BLDG 6 LAB RENOVATION**

Location: VAPAHCS - PALO ALTO CAMPUS, 3801 MIRANDA AVE, PALO ALTO, CA 94304

Date: 04.17.2014 | Checked: HP | Drawn: AF

Project Number: 640-13-121P

Building Number: 6

Drawing Number: E504

Dwg. - of -

Office of Construction and Facilities Management

Department of Veterans Affairs

VA FORM 08-6231

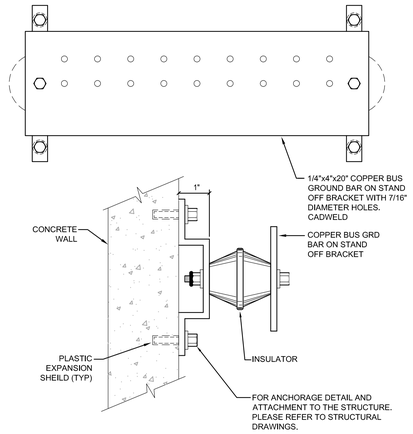

TECHNICAL GROUND BUS MOUNTING TO CONCRETE (7)

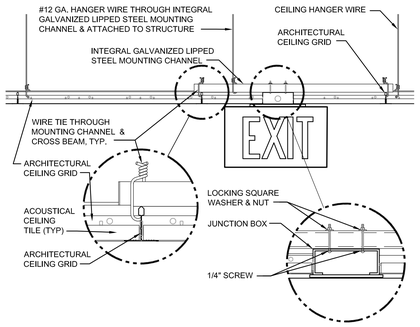

EXIT SIGN MOUNTING - LAY-IN CEILING (4)

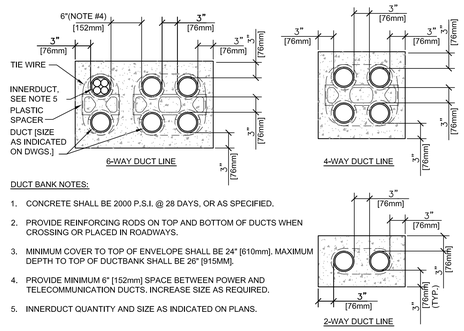

DUCT BANK NOTES:

1. CONCRETE SHALL BE 2000 P.S.I. @ 28 DAYS, OR AS SPECIFIED.
2. PROVIDE REINFORCING RODS ON TOP AND BOTTOM OF DUCTS WHEN CROSSING OR PLACED IN ROADWAYS.
3. MINIMUM COVER TO TOP OF ENVELOPE SHALL BE 24" [610mm]. MAXIMUM DEPTH TO TOP OF DUCTBANK SHALL BE 26" [915MM].
4. PROVIDE MINIMUM 6" [152mm] SPACE BETWEEN POWER AND TELECOMMUNICATION DUCTS. INCREASE SIZE AS REQUIRED.
5. INNERDUCT QUANTITY AND SIZE AS INDICATED ON PLANS.

DUCT BANK DETAILS (1)

(10)

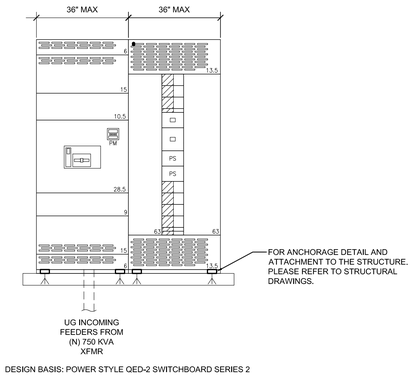

DESIGN BASIS: POWER STYLE QED-2 SWITCHBOARD SERIES 2

6 NL OUTDOOR NEMA 3R SWITCHBOARD ELEVATION (8)

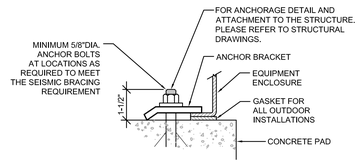

ANCHOR BOLT DETAIL

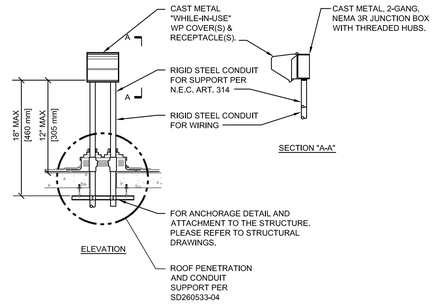

RECEPTACLE ROOF MOUNTING RETAIL (2)

(11)

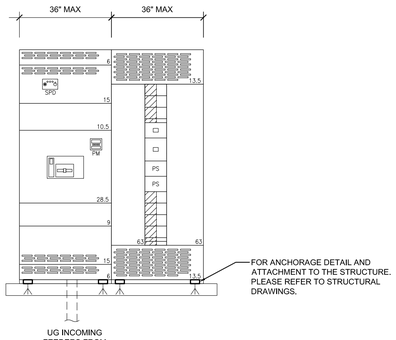

DESIGN BASIS: POWER STYLE QED-2 SWITCHBOARD SERIES 2

INDOOR MAIN SWITCHBOARD ELEVATION (9)

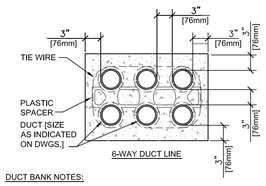

DUCT BANK NOTES:

1. CONCRETE SHALL BE 2000 P.S.I. @ 28 DAYS, OR AS SPECIFIED.
2. PROVIDE REINFORCING RODS ON TOP AND BOTTOM OF DUCTS WHEN CROSSING OR PLACED IN ROADWAYS.
3. MINIMUM COVER TO TOP OF ENVELOPE SHALL BE 24" [610mm]. MAXIMUM DEPTH TO TOP OF DUCTBANK SHALL BE 26" [915MM].

DUCT BANK SECTION - (N) 750 KVA XFMR TO (N) 6NL SWITCHBOARD (6)

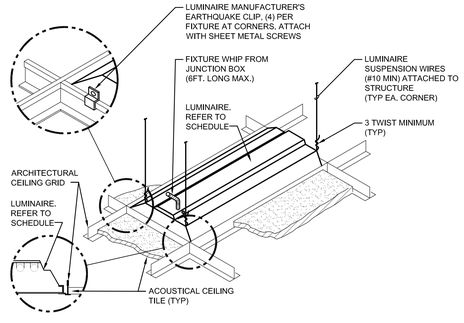

LUMINAIRE MOUNTING - LAY-IN CEILING (3)

(12)

HILLIARD ARCHITECTS INC. COPYRIGHT 2008

FINAL BID DOCUMENTS

ISSUED AS 60% PROGRESS SET	11.01.2013
Revisions:	Date

CONSULTANTS:

SYSKA HENNESSY GROUP
A member company of SH Group, Inc.

Syska Hennessy Group, Inc.
425 California Street
Suite 700
San Francisco, CA 94104
Tel: 415.288.9060
Fax: 415.835.0385
www.syska.com

REGISTERED PROFESSIONAL ENGINEER — VICTOR G. STUFFEN — No. 11872 — Exp. 12/31/14 — ELECTRICAL — STATE OF CALIFORNIA

ARCHITECT/ENGINEERS:

ESTABLISHED 1988 HILLIARD ARCHITECTS GOING GREEN

HILLIARD ARCHITECTS, INC
251 Post Street, Suite 620
San Francisco, CA 94108-5017
Tel 415 989 6400, Fax 415 989 3056
www.HilliardArchitects.com

Drawing Title: **ELECTRICAL DETAILS**

Approved: Project Director

Project Title: **VA PA BLDG 6 LAB RENOVATION**

Location: **VAPAHCS - PALO ALTO CAMPUS 3801 MIRANDA AVE, PALO ALTO, CA 94304**

Date: **04.17.2014** | Checked: **HP** | Drawn: **AF**

Project Number: **640-13-121P**

Building Number: **6**

Drawing Number: **E505**

Dwg. - of -

Office of Construction and Facilities Management

Department of Veterans Affairs

VA FORM 08-6231

Branch Panel: 1CE

Location: Space 136
Supply From:
Mounting: Recessed
Enclosure: Type 1

Volts: 120/208 Wye
Phases: 3
Wires: 4

A.I.C. Rating: 10,000
Mains Type: MLO
Mains Rating: 100 A
MCB Rating:

Notes: REFER TO SINGLE LINE DIAGRAM

CKT	Circuit Description	Trip	Poles	A		B		C		Poles	Trip	Circuit Description	CKT
1	FAN AHU-2A	20 A	1	1000	180 VA					1	20 A	CONV OUTLET	2
3	ACCH CONV RECEP	20 A	1			180 VA	1580			2	30 A	ACCU - 1A2	4
5	ACCH CONTROL PANEL	20 A	1					1000	1580	--	--	--	6
7	ACCU - 1A1	25 A	2	1580	360 VA					1	20 A	SSHX CONTROLLER	8
9	--	--	--			1580	360 VA			1	20 A	SWHX CONTROL PANEL	10
11	HHP-1 AND HHP-2 CTRL PNL	20 A	1					360 VA	360 VA	1	20 A	STORAGE AND MECH ROOM	12
13	BYPASS CONTROL VALVE	20 A	1	360 VA	0 VA					1	0 A	Spare	14
15	AHU1B LIGHTS	20 A	1			360 VA	0 VA			1	0 A	Spare	16
17	Spare	0 A	1					0 VA	0 VA	1	0 A	Spare	18
19	Spare	0 A	1	0 VA	0 VA					--	--	Space	20
21	Spare	0 A	1			0 VA	0 VA			--	--	Space	22
23	Spare	0 A	1					0 VA	0 VA	--	--	Space	24
25	Space	--	--	0 VA	0 VA					--	--	Space	26
27	Space	--	--			0 VA	0 VA			--	--	Space	28
29	Space	--	--					0 VA	0 VA	--	--	Space	30
31													32
33													34
35													36
37													38
39													40
41													42
			Total Load:	3480 VA		4060 VA		3300 VA					
			Total Amps:	29 A		34 A		28 A					

Legend:

Load Classification	Connected Load	Demand Factor	Estimated Demand	Panel Totals	
Receptacle	0 VA	0.00%	0 VA		
Lighting	0 VA	0.00%	0 VA	**Total Conn. Load:**	10840 VA
HVAC	0 VA	0.00%	0 VA	**Total Est. Demand:**	10840 VA
Kitchen Equipment - Non-Dwelling Unit	0 VA	0.00%	0 VA	**Total Conn.:**	30 A
Equipment	6320 VA	100.00%	6320 VA	**Total Est. Demand:**	30 A
Motor	0 VA	0.00%	0 VA		
Transformer	0 VA	0.00%	0 VA		
Power	4520 VA	100.00%	4520 VA		
Spare	0 VA	0.00%	0 VA		

Notes:

Branch Panel: 1CC

Location: Space 131
Supply From:
Mounting: Recessed
Enclosure: Type 1

Volts: 120/208 Wye
Phases: 3
Wires: 4

A.I.C. Rating: 10,000
Mains Type: MLO
Mains Rating: 150 A
MCB Rating:

Notes: REFER TO SINGLE LINE DIAGRAM

CKT	Circuit Description	Trip	Poles	A		B		C		Poles	Trip	Circuit Description	CKT
1	IT ROOM CONV C127	20 A	1	900 VA	750 VA					2	30 A	IT RACK RECEPTACLE C127	2
3	IT RACK RECEPTACLE C127	30 A	2			750 VA	750 VA			--	--	--	4
5	--	--	--					750 VA	750 VA	2	30 A	IT RACK RECEPTACLE C127	6
7	IT RACK RECEPTACLE C127	30 A	2	750 VA	750 VA					--	--	--	8
9	--	--	--			750 VA	750 VA			2	30 A	IT RACK RECEPTACLE C127	10
11	IT RACK RECEPTACLE C127	30 A	2					750 VA	750 VA	--	--	--	12
13	--	--	--	750 VA	750 VA					2	30 A	IT RACK RECEPTACLE C127	14
15	IT RACK RECEPTACLE C127	30 A	2			750 VA	750 VA			--	--	--	16
17	--	--	--					750 VA	180 VA	1	20 A	SOUND MASKING SYSTEM	18
19					0 VA					1	0 A	Spare	20
21	FCUC 1A1 AND 1A2 CONDENSATE PUMP	20 A	1			1000	0 VA			1	0 A	Spare	22
23	Spare	0 A	1					0 VA	0 VA	1	0 A	Spare	24
25	Spare	0 A	1	0 VA	0 VA					1	0 A	Spare	26
27	Spare	0 A	1			0 VA	0 VA			1	0 A	Spare	28
29	Spare	0 A	1					0 VA	0 VA	1	0 A	Spare	30
31	Spare	0 A	1	0 VA	0 VA					1	0 A	Spare	32
33	Spare	0 A	1			0 VA	0 VA			1	0 A	Spare	34
35	Spare	0 A	1					0 VA	0 VA	1	0 A	Spare	36
37	Spare	0 A	1	0 VA	0 VA					1	0 A	Spare	38
39	Spare	0 A	1			0 VA	0 VA			1	0 A	Spare	40
41	Spare	0 A	1					0 VA	0 VA	1	0 A	Spare	42
			Total Load:	4650 VA		5500 VA		3930 VA					
			Total Amps:	40 A		47 A		33 A					

Legend:

Load Classification	Connected Load	Demand Factor	Estimated Demand	Panel Totals	
Receptacle	0 VA	0.00%	0 VA		
Lighting	0 VA	0.00%	0 VA	**Total Conn. Load:**	14080 VA
HVAC	0 VA	0.00%	0 VA	**Total Est. Demand:**	14080 VA
Kitchen Equipment - Non-Dwelling Unit	0 VA	0.00%	0 VA	**Total Conn.:**	39 A
Equipment	0 VA	0.00%	0 VA	**Total Est. Demand:**	39 A
Motor	0 VA	0.00%	0 VA		
Transformer	0 VA	0.00%	0 VA		
Power	14080 VA	100.00%	14080 VA		
Spare	0 VA	0.00%	0 VA		

Notes:

Branch Panel: 1CA

Location: Space 184
Supply From:
Mounting: Recessed
Enclosure: Type 1

Volts: 120/208 Wye
Phases: 3
Wires: 4

A.I.C. Rating: 10,000
Mains Type: MLO
Mains Rating: 225 A
MCB Rating:

Notes: REFER TO SINGLE LINE DIAGRAM

CKT	Circuit Description	Trip	Poles	A		B		C		Poles	Trip	Circuit Description	CKT
1	ADMIN C142	20 A	1	1080	1080					1	20 A	ADMIN C142	2
3	ADMIN C142	20 A	1			900 VA	1080			1	20 A	ADMIN C142	4
5	CIRCULATION RECEP C142B	20 A	1					720 VA	180 VA	1	20 A	PLOTTER DED C142B	6
7	DED RECEP C142B	20 A	1	180 VA	1152					1	20 A	ADMIN LIGHTING C142	8
9	LIGHTING POWER C141, C142A	20 A	1			456 VA	360 VA			1	20 A	HALLWAY C142A	10
11	LIGHTING POWER C142B	20 A	1					192 VA	1040	1	20 A	C139 TV OUTLET	12
13	WATER BATH C143A	20 A	1	500 VA	720 VA					1	20 A	HALLWAY RECEPTACLES	14
15	CENTRIFUGE 5804R C143A	20 A	1			1920	840 VA			1	20 A	LTG C132, C140	16
17	LTG C136 - C139	20 A	1					1500	1620	1	25 A	REFRIGERATOR -20 DEGREE C140	18
19	LUNCH ROOM/LOUNGE C140 CONV	20 A	1	540 VA	900 VA					1	20 A	OFFICE C132 OUTLET	20
21	VENDING MACHINE C140	20 A	1			1000	180 VA			1	20 A	RTU-1 ROOFTOP RECEPTACLE	22
23	VENDING MACHINE C140	20 A	1					1000	720 VA	1	20 A	WORKSTATION C143A	24
25	OPEN OFFICE C139	20 A	1	720 VA	1080					1	20 A	OPEN OFFICE C139	26
27	TISSUE CULTURE C143A	20 A	1			720 VA	1080			1	20 A	OPEN OFFICE C139	28
29	WORKROOM C136, C137, C138 RECEP	20 A	1					1080	540 VA	1	20 A	CONFERENCE CONV RECEP	30
31	FREEZER C143A	20 A	1	3100	600 VA					1	20 A	LTG HALLWAY C101	32
33	Spare	0 A	1			0 VA	0 VA			1	0 A	Spare	34
35	Spare	0 A	1					0 VA	0 VA	1	0 A	Spare	36
37	Spare	0 A	1	0 VA	0 VA					1	0 A	Spare	38
39	Spare	0 A	1			0 VA	0 VA			1	0 A	Spare	40
41	Spare	0 A	1					0 VA	0 VA	1	0 A	Spare	42
			Total Load:	11652 VA		8536 VA		8592 VA					
			Total Amps:	97 A		71 A		72 A					

Legend:

Load Classification	Connected Load	Demand Factor	Estimated Demand	Panel Totals	
Receptacle	0 VA	0.00%	0 VA		
Lighting	1440 VA	100.00%	1440 VA	**Total Conn. Load:**	28780 VA
HVAC	0 VA	0.00%	0 VA	**Total Est. Demand:**	28780 VA
Kitchen Equipment - Non-Dwelling Unit	0 VA	0.00%	0 VA	**Total Conn.:**	80 A
Equipment	0 VA	0.00%	0 VA	**Total Est. Demand:**	80 A
Motor	0 VA	0.00%	0 VA		
Transformer	0 VA	0.00%	0 VA		
Power	24040 VA	100.00%	24040 VA		
Spare	0 VA	0.00%	0 VA		

Notes:
LOADS IN PANEL SHOWS NEW LOAD IN ADMIN WORK AND FUTURE LAB WORK. CONTRACTOR TO REFER AND COORDINATE WITH THE FLOOR PLAN FOR RELATED WORK.

Branch Panel: H1CA

Location: Space 123
Supply From:
Mounting: Surface
Enclosure: Type 1

Volts: 480/277 Wye
Phases: 3
Wires: 4

A.I.C. Rating: 14,000
Mains Type: MCB
Mains Rating: 125 A
MCB Rating: 70 A

Notes: REFER TO SINGLE LINE DIAGRAM

CKT	Circuit Description	Trip	Poles	A		B		C		Poles	Trip	Circuit Description	CKT
1	6-VFD-HHP1	20 A	3	3322	3322					3	20 A	6-VFD-HHP2	2
3	--	--	--			3322	3322			--	--	--	4
5	--	--	--					3322	3322	--	--	--	6
7	6-REF-3	15 A	3	100 VA	0 VA					1	0 A	Spare	8
9	--	--	--			100 VA	0 VA			1	0 A	Spare	10
11	--	--	--					100 VA	0 VA	1	0 A	Spare	12
13	Spare	0 A	1	0 VA	0 VA					1	0 A	Spare	14
15	Spare	0 A	1			0 VA	0 VA			1	0 A	Spare	16
17	Spare	0 A	1					0 VA	0 VA	1	0 A	Spare	18
19	Spare	0 A	1	0 VA	0 VA					1	0 A	Spare	20
21	Spare	0 A	1			0 VA	0 VA			1	0 A	Spare	22
23	Spare	0 A	1					0 VA	0 VA	1	0 A	Spare	24
25	Spare	0 A	1	0 VA	0 VA					1	0 A	Spare	26
27	Spare	0 A	1			0 VA	0 VA			1	0 A	Spare	28
29	Spare	0 A	1					0 VA	0 VA	1	0 A	Spare	30
31													32
33													34
35													36
37													38
39													40
41													42
			Total Load:	6743 VA		6743 VA		6743 VA					
			Total Amps:	24 A		24 A		24 A					

Legend:

Load Classification	Connected Load	Demand Factor	Estimated Demand	Panel Totals	
Receptacle	0 VA	0.00%	0 VA		
Lighting	0 VA	0.00%	0 VA	**Total Conn. Load:**	20230 VA
HVAC	0 VA	0.00%	0 VA	**Total Est. Demand:**	20230 VA
Kitchen Equipment - Non-Dwelling Unit	0 VA	0.00%	0 VA	**Total Conn.:**	24 A
Equipment	0 VA	0.00%	0 VA	**Total Est. Demand:**	24 A
Motor	0 VA	0.00%	0 VA		
Transformer	0 VA	0.00%	0 VA		
Power	20230 VA	100.00%	20230 VA		
Spare	0 VA	0.00%	0 VA		

Notes:

Branch Panel: 1CD

Location: Space 136
Supply From:
Mounting: Recessed
Enclosure: Type 1

Volts: 120/208 Wye
Phases: 3
Wires: 4

A.I.C. Rating: 10,000
Mains Type: MLO
Mains Rating: 225 A
MCB Rating:

Notes: REFER TO SINGLE LINE DIAGRAM

CKT	Circuit Description	Trip	Poles	A		B		C		Poles	Trip	Circuit Description	CKT
1	FUME HOOD C144A	20 A	1	1000	1550					1	20 A	FRIDGE/FREEZER C143	2
3	FUME HOOD C144A	20 A	1			1000	960 VA			1	20 A	UC FRIDGE OPEN LAB C143	4
5	UC FRIDGE OPEN LAB C143	20 A	1					960 VA	960 VA	1	20 A	UC FRIDGE OPEN LAB C143	6
7	UC FRIDGE OPEN LAB C143	20 A	1	960 VA	1152					1	20 A	CO2 INCUBATOR	8
9	CO2 INCUBATOR	20 A	1			1152	1152			1	20 A	CO2 INCUBATOR C143A	10
11	CO2 INCUBATOR C143A	20 A	1					1152	1152	1	20 A	CO2 INCUBATOR	12
13	CO2 INCUBATOR C143A	20 A	1	1152	1104					1	20 A	DELI FRIDGE C143	14
15	CO2 INCUBATOR	20 A	1			1152	0 VA			1	0 A	Spare	16
17	Spare	0 A	1					0 VA	0 VA	1	0 A	Spare	18
19	Spare	0 A	1	0 VA	0 VA					1	0 A	Spare	20
21	Spare	0 A	1			0 VA	0 VA			1	0 A	Spare	22
23	Spare	0 A	1					0 VA	0 VA	1	0 A	Spare	24
25	Spare	0 A	1	0 VA	0 VA					1	0 A	Spare	26
27	Spare	0 A	1			0 VA	0 VA			1	0 A	Spare	28
29	Space	--	--					0 VA	0 VA	--	--	Space	30
31	Space	--	--	0 VA	0 VA					--	--	Space	32
33	Space	--	--			0 VA	0 VA			--	--	Space	34
35	Space	--	--					0 VA	0 VA	--	--	Space	36
37	Space	--	--	0 VA	0 VA					--	--	Space	38
39	Space	--	--			0 VA	0 VA			--	--	Space	40
41	Space	--	--					0 VA	0 VA	--	--	Space	42
			Total Load:	6918 VA		5416 VA		4224 VA					
			Total Amps:	59 A		47 A		35 A					

Legend:

Load Classification	Connected Load	Demand Factor	Estimated Demand	Panel Totals	
Receptacle	0 VA	0.00%	0 VA		
Lighting	0 VA	0.00%	0 VA	**Total Conn. Load:**	16558 VA
HVAC	0 VA	0.00%	0 VA	**Total Est. Demand:**	16558 VA
Kitchen Equipment - Non-Dwelling Unit	0 VA	0.00%	0 VA	**Total Conn.:**	46 A
Equipment	0 VA	0.00%	0 VA	**Total Est. Demand:**	46 A
Motor	0 VA	0.00%	0 VA		
Transformer	0 VA	0.00%	0 VA		
Power	16558 VA	100.00%	16558 VA		
Spare	0 VA	0.00%	0 VA		

Notes:

Branch Panel: 1CB

Location: Space 136
Supply From:
Mounting: Recessed
Enclosure: Type 1

Volts: 120/208 Wye
Phases: 3
Wires: 4

A.I.C. Rating: 10,000
Mains Type: MLO
Mains Rating: 225 A
MCB Rating:

Notes: REFER TO SINGLE LINE DIAGRAM

CKT	Circuit Description	Trip	Poles	A		B		C		Poles	Trip	Circuit Description	CKT
1	MICROSCOPE C129	20 A	1	180 VA	1620					1	20 A	LTG. C143, C143A, C144A, C144	2
3	MICROSCOPE C129	20 A	1			180 VA	1725			1	20 A	BD FACSCALIBUR C143	4
5	LTG. C126, C127, C128, C129	20 A	1					540 VA	1920	1	20 A	GW OPEN LAB C143	6
7	LTG. OPEN LAB C143	20 A	1	1380	1080					1	20 A	WORKSTATION OPEN LAB C143	8
9	CENTRIFUGES C144 AND POWER STRIP	20 A	1			720 VA	720 VA			1	20 A	WORKSTATION OPEN LAB C143	10
11	ICE MACHINE	20 A	1					1320	720 VA	1	20 A	WORKSTATION OPEN LAB C143	12
13	WORKSTATION OPEN LAB C143	20 A	1	1080	1080					1	20 A	WORKSTATION OPEN LAB C143	14
15	WORKSTATION OPEN LAB C143	20 A	1			720 VA	720 VA			1	20 A	WORKSTATION OPEN LAB C143	16
17	WORKSTATION OPEN LAB C143	20 A	1					720 VA	720 VA	1	20 A	WORKSTATION OPEN LAB C143	18
19	WORKSTATION OPEN LAB C143	20 A	1	720 VA	1080					1	20 A	WORKSTATION OPEN LAB C143	20
21	WORKSTATION OPEN LAB C143	20 A	1			720 VA	720 VA			1	20 A	WORKSTATION OPEN LAB C143	22
23	WORKSTATION OPEN LAB C143	20 A	1					1080	720 VA	1	20 A	WORKSTATION OPEN LAB C143	24
25	WORKSTATION OPEN LAB C143	20 A	1	720 VA	540 VA					1	20 A	WORKSTATION OPEN LAB C143	26
27	WORKSTATION OPEN LAB C143	20 A	1			720 VA	720 VA			1	20 A	WORKSTATION OPEN LAB C143	28
29	WORKSTATION OPEN LAB C143	20 A	1					1080	720 VA	1	20 A	WORKSTATION OPEN LAB C143	30
31	WORKSTATION OPEN LAB C143	20 A	1	720 VA	720 VA					1	20 A	WORKSTATION OPEN LAB C143	32
33	WORKSTATION OPEN LAB C143	20 A	1			720 VA	720 VA			1	20 A	WORKSTATION OPEN LAB C143	34
35	WORKSTATION OPEN LAB C143	20 A	1					1080	0 VA	1	0 A	Spare	36
37	Spare	0 A	1	0 VA	720 VA					1	20 A	WORKSTATION OPEN LAB C143	38
39	Spare	0 A	1			0 VA	720 VA			1	20 A	WORKSTATION OPEN LAB C143	40
41	Spare	0 A	1					0 VA	0 VA	1	0 A	Spare	42
			Total Load:	11640 VA		9825 VA		10620 VA					
			Total Amps:	98 A		82 A		90 A					

Legend:

Load Classification	Connected Load	Demand Factor	Estimated Demand	Panel Totals	
Power	28545 VA	100.00%	28545 VA		
				Total Conn. Load:	32085 VA
				Total Est. Demand:	32085 VA
				Total Conn.:	89 A
				Total Est. Demand:	89 A

Notes:

HILLIARD ARCHITECTS INC. COPYRIGHT

FINAL BID DOCUMENTS

Revision 1	**05.02.2014**
Revisions:	Date

CONSULTANTS:

SYSKA HENNESSY GROUP
A member company of SH Group, Inc.

Syska Hennessy Group, Inc.
425 California Street
Suite 700
San Francisco, CA 94104
Tel: 415.288.9060
Fax: 415.835.0385
www.syska.com

REGISTERED PROFESSIONAL ENGINEER
VICTOR G. STEFFEN
No. 11872
Exp. 12/31/14
ELECTRICAL
STATE OF CALIFORNIA

ARCHITECT/ENGINEERS:

ESTABLISHED 1988 HILLIARD ARCHITECTS GOING GREEN

HILLIARD ARCHITECTS, INC
251 Post Street, Suite 620
San Francisco, CA 94108-5017
Tel 415 989 6400, Fax 415 989 3056
www.HilliardArchitects.com

Drawing Title: **PANEL SCHEDULES - 1ST FLOOR**

Approved: Project Director

Project Title: **VA PA BLDG 6 LAB RENOVATION**

Location: **VAPAHCS, PALO ALTO CAMPUS 3801 MIRANDA AVE. PALO ALTO, CA 94304**

Date: **04.17.14** | Checked: **HP** | Drawn: **HP**

Project Number: **640-13-121P**

Building Number: **6**

Drawing Number: **E601**

Dwg. of

Office of Construction and Facilities Management

Department of Veterans Affairs

VA FORM 08-6231

Branch Panel: 2CC

Location: OPEN LAB C248
Supply From:
Mounting: Surface
Enclosure: Type 1

Volts: 120/208 Wye
Phases: 3
Wires: 4

A.I.C. Rating: 10,000
Mains Type: MLO
Mains Rating: 225 A
MCB Rating:

Notes: REFER TO SINGLE LINE DIAGRAM

CKT	Circuit Description	Trip	Poles	A		B		C		Poles	Trip	Circuit Description	CKT
1	WORKSTATION OPEN LAB C248	20 A	1	1080	720 VA					1	20 A	WORKSTATION OPEN LAB C248	2
3	WORKSTATION OPEN LAB C248	20 A	1			720 VA	720 VA			1	20 A	WORKSTATION OPEN LAB C248	4
5	WORKSTATION OPEN LAB C248	20 A	1					720 VA	1080	1	20 A	WORKSTATION OPEN LAB C248	6
7	WORKSTATION OPEN LAB C248	20 A	1	720 VA	720 VA					1	20 A	WORKSTATION OPEN LAB C248	8
9	WORKSTATION OPEN LAB C248	20 A	1			720 VA	1080			1	20 A	WORKSTATION OPEN LAB C248	10
11	WORKSTATION OPEN LAB C248	20 A	1					1080	720 VA	1	20 A	WORKSTATION OPEN LAB C248	12
13	WORKSTATION OPEN LAB C248	20 A	1	720 VA	1080					1	20 A	WORKSTATION OPEN LAB C248	14
15	WORKSTATION OPEN LAB C248	20 A	1			720 VA	720 VA			1	20 A	WORKSTATION OPEN LAB C248	16
17	WORKSTATION OPEN LAB C248	20 A	1					1080	720 VA	1	20 A	WORKSTATION OPEN LAB C248	18
19	WORKSTATION OPEN LAB C248	20 A	1	720 VA	720 VA					1	20 A	WORKSTATION OPEN LAB C248	20
21	WORKSTATION OPEN LAB C248	20 A	1			720 VA	1080			1	20 A	WORKSTATION OPEN LAB C248	22
23	WORKSTATION OPEN LAB C248	20 A	1					1080	720 VA	1	20 A	WORKSTATION OPEN LAB C248	24
25	WORKSTATION OPEN LAB C248	20 A	1	720 VA	1080					1	20 A	WORKSTATION OPEN LAB C248	26
27	WORKSTATION OPEN LAB C248	20 A	1			720 VA	720 VA			1	20 A	WORKSTATION OPEN LAB C248	28
29	WORKSTATION OPEN LAB C248	20 A	1					1080	720 VA	1	20 A	WORKSTATION OPEN LAB C248	30
31	WORKSTATION OPEN LAB C248	20 A	1	720 VA	720 VA					1	20 A	WORKSTATION OPEN LAB C248	32
33	WORKSTATION OPEN LAB C248	20 A	1			720 VA	1080			1	20 A	WORKSTATION OPEN LAB C248	34
35	WORKSTATION OPEN LAB C248	20 A	1					1080	720 VA	1	20 A	WORKSTATION OPEN LAB C248	36
37	WORKSTATION OPEN LAB C248	20 A	1	720 VA	720 VA					1	20 A	WORKSTATION OPEN LAB C248	38
39	WORKSTATION OPEN LAB C248	20 A	1			720 VA	1920			1	20 A	GW OPEN LAB C248	40
41	WORKSTATION OPEN LAB C248	20 A	1					1080	1440	1	20 A	FR-05 OPEN LAB C248	42
			Total Load:	11160 VA		12360 VA		13320 VA					
			Total Amps:	93 A		105 A		113 A					

Legend:

Load Classification	Connected Load	Demand Factor	Estimated Demand	Panel Totals	
Receptacle	0 VA	0.00%	0 VA		
Lighting	0 VA	0.00%	0 VA	**Total Conn. Load:**	36840 VA
HVAC	0 VA	0.00%	0 VA	**Total Est. Demand:**	36840 VA
Kitchen Equipment - Non-Dwelling Unit	0 VA	0.00%	0 VA	**Total Conn.:**	102 A
Equipment	0 VA	0.00%	0 VA	**Total Est. Demand:**	102 A
Motor	0 VA	0.00%	0 VA		
Transformer	0 VA	0.00%	0 VA		
Power	36840 VA	100.00%	36840 VA		
Spare	0 VA	0.00%	0 VA		

Notes:

Branch Panel: 2CA

Location: Space 6
Supply From:
Mounting: Recessed
Enclosure: Type 1

Volts: 120/208 Wye
Phases: 3
Wires: 4

A.I.C. Rating: 10,000
Mains Type: MLO
Mains Rating: 400 A
MCB Rating:

Notes: REFER TO SINGLE LINE DIAGRAM

CKT	Circuit Description	Trip	Poles	A		B		C		Poles	Trip	Circuit Description	CKT
1	STERILIZER STEAM GENERATOR	125 A	3	9980	720 VA					1	20 A	WORKSTAION RECEP C247	2
3	--	--	--			9980	720 VA			1	20 A	WORKSTATION RECEP C247	4
5	--	--	--					9980	720 VA	1	20 A	MICROCOPE C247	6
7	WORKSTATION OPEN LAB C248	20 A	1	1080	180 VA					1	20 A	LIQUID NITROGEN C250	8
9	WORKSTATION OPEN LAB C248	20 A	1			720 VA	1116			1	20 A	STERILIZER C251	10
11	WORKSTATION OPEN LAB C248	20 A	1					720 VA	1080	1	20 A	LIQUID NITROGEN FREEZER C250	12
13	WORKSTATION OPEN LAB C248	20 A	1	720 VA	960 VA					1	20 A	LTG C242, C243, C247, C244, C240, C245	14
15	WORKSTATION OPEN LAB C248	20 A	1			720 VA	720 VA			1	20 A	WORKSTATION RECEP C240	16
17	WORKSTATION OPEN LAB C248	20 A	1					1080	720 VA	1	20 A	WORKSTATION RECEP C240	18
19	WORKSTATION RECEP C250	20 A	1	720 VA	180 VA					1	20 A	WORKSTATION C251	20
21	WORKSTATION RECEP C250	20 A	1			720 VA	800 VA			1	20 A	FLOOR SHAKING INCUBRATOR C245	22
23	WORKSTATION RECEP C250	20 A	1					720 VA	1800	1	20 A	LTG C240, C241, C250, C251	24
25	WORKSTATION RECEP C250	20 A	1	720 VA	1000					1	20 A	CO2 MANIFOLD	26
27	MICROSCOPE INNOVATIS C250	20 A	1			295 VA	720 VA			1	20 A	WORKSTATION RECEP C241	28
29	Spare	0 A	1					0 VA	720 VA	1	20 A	WORKSTATION RECEP C241	30
31	SORVALL RC28S C246	20 A	2	2496	1725					1	20 A	FLOW CYTOMETER C246	32
33	--	--	--			2496	1800			1	20 A	SORVALL RT 6000B C246	34
35	Spare	0 A	1					0 VA	1920	1	20 A	CENTRIFUGE EPPENDURF C246	36
37	ICE MACHINE C246	20 A	1	1320	0 VA					1	0 A	Spare	38
39	MESO SCALE C246	20 A	1			420 VA	0 VA			1	0 A	Spare	40
41	CENTRIFUGE BECKMAN C246	20 A	1					1560	0 VA	1	0 A	Spare	42
			Total Load:	21801 VA		21227 VA		21020 VA					
			Total Amps:	182 A		177 A		175 A					

Legend:

Load Classification	Connected Load	Demand Factor	Estimated Demand	Panel Totals	
Power	61287 VA	100.00%	61287 VA		
				Total Conn. Load:	64047 VA
				Total Est. Demand:	64047 VA
				Total Conn.:	178 A
				Total Est. Demand:	178 A

Notes:

Branch Panel: EM1CA

Location: Space 136
Supply From:
Mounting: Recessed
Enclosure: Type 1

Volts: 120/208 Wye
Phases: 3
Wires: 4

A.I.C. Rating: 10,000
Mains Type: MLO
Mains Rating: 225 A
MCB Rating:

Notes: REFER TO SINGLE LINE DIAGRAM

CKT	Circuit Description	Trip	Poles	A		B		C		Poles	Trip	Circuit Description	CKT
1	BIOSAFETY CABINET C143A	20 A	1	1560	680 VA					1	20 A	AHU-1A CONV RECEP AND LIGHTS	2
3	BIOSAFETY CABINET C143A	20 A	1			1560	360 VA			1	20 A	AHU-1A CONTROL PANEL	4
5	BIOSAFETY CABINET C143A	20 A	1					1560	1840	1	20 A	FREEZER C143 LAB	6
7	FUME HOOD CONTROLLER	20 A	1	360 VA	1140					1	20 A	CO2 INCUBATOR	8
9	VAV XFMR	20 A	1			450 VA	720 VA			1	20 A	VENTURI CONTROL VALVE XFMR	10
11	FSD	20 A	1					700 VA	692 VA	1	20 A	ADMIN EMERGENCY POWER	12
13	LTG. 1ST FLOOR	20 A	1	1895	180 VA					1	20 A	DDC CONTROLLER	14
15	DDC CONTROLLER IN LAB AREA	20 A	1			180 VA	540 VA			1	20 A	BSC CONTROLLER	16
17	Spare	0 A	1					0 VA	0 VA	--	--	Space	18
19	Spare	0 A	1	0 VA	0 VA					--	--	Space	20
21	Spare	0 A	1			0 VA	0 VA			--	--	Space	22
23	Spare	0 A	1					0 VA	0 VA	--	--	Space	24
25													26
27													28
29													30
31													32
33													34
35													36
37													38
39													40
41													42
			Total Load:	5815 VA		3810 VA		4792 VA					
			Total Amps:	50 A		32 A		41 A					

Legend:

Load Classification	Connected Load	Demand Factor	Estimated Demand	Panel Totals	
Receptacle	0 VA	0.00%	0 VA		
Lighting	0 VA	0.00%	0 VA	**Total Conn. Load:**	14417 VA
HVAC	0 VA	0.00%	0 VA	**Total Est. Demand:**	14417 VA
Kitchen Equipment - Non-Dwelling Unit	0 VA	0.00%	0 VA	**Total Conn.:**	40 A
Equipment	0 VA	0.00%	0 VA	**Total Est. Demand:**	40 A
Motor	0 VA	0.00%	0 VA		
Transformer	0 VA	0.00%	0 VA		
Power	12522 VA	100.00%	12522 VA		
Spare	0 VA	0.00%	0 VA		

Notes:

Branch Panel: 2CD

Location: Space 6
Supply From:
Mounting: Recessed
Enclosure: Type 1

Volts: 120/208 Wye
Phases: 3
Wires: 4

A.I.C. Rating: 10,000
Mains Type: MLO
Mains Rating: 225 A
MCB Rating:

Notes: REFER TO SINGLE LINE DIAGRAM

CKT	Circuit Description	Trip	Poles	A		B		C		Poles	Trip	Circuit Description	CKT
1	WORKSTATION OPEN LAB C248	20 A	1	720 VA	720 VA					1	20 A	WORKSTATION OPEN LAB C248	2
3	WORKSTATION OPEN LAB C248	20 A	1			720 VA	720 VA			1	20 A	WORKSTATION OPEN LAB C248	4
5	WORKSTATION OPEN LAB C248	20 A	1					720 VA	720 VA	1	20 A	WORKSTATION OPEN LAB C248	6
7	WORKSTATION OPEN LAB C248	20 A	1	720 VA	720 VA					1	20 A	WORKSTATION OPEN LAB C248	8
9	WORKSTATION OPEN LAB C248	20 A	1			720 VA	720 VA			1	20 A	WORKSTATION OPEN LAB C248	10
11	WORKSTATION OPEN LAB C248	20 A	1					720 VA	720 VA	1	20 A	WORKSTATION OPEN LAB C248	12
13	WORKSTATION OPEN LAB C248	20 A	1	720 VA	720 VA					1	20 A	WORKSTATION OPEN LAB C248	14
15	WORKSTATION OPEN LAB C248	20 A	1			720 VA	720 VA			1	20 A	WORKSTATION OPEN LAB C248	16
17	WORKSTATION OPEN LAB C248	20 A	1					720 VA	720 VA	1	20 A	WORKSTATION OPEN LAB C248	18
19	WORKSTATION OPEN LAB C248	20 A	1	720 VA	720 VA					1	20 A	WORKSTATION OPEN LAB C248	20
21	WORKSTATION OPEN LAB C248	20 A	1			720 VA	720 VA			1	20 A	WORKSTATION OPEN LAB C248	22
23	WORKSTATION OPEN LAB C248	20 A	1					1080	720 VA	1	20 A	WORKSTATION OPEN LAB C248	24
25	WORKSTATION OPEN LAB C248	20 A	1	720 VA	720 VA					1	20 A	WORKSTATION OPEN LAB C248	26
27	WORKSTATION OPEN LAB C248	20 A	1			720 VA	720 VA			1	20 A	WORKSTATION OPEN LAB C248	28
29	WORKSTATION OPEN LAB C248	20 A	1					720 VA	720 VA	1	20 A	WORKSTATION OPEN LAB C248	30
31	WORKSTATION OPEN LAB C248	20 A	1	720 VA	720 VA					1	20 A	WORKSTATION OPEN LAB C248	32
33	WORKSTATION OPEN LAB C248	20 A	1			720 VA	720 VA			1	20 A	WORKSTATION OPEN LAB C248	34
35	WORKSTATION OPEN LAB C248	20 A	1					720 VA					36
37	WORKSTATION OPEN LAB C248	20 A	1	720 VA	1920					1	20 A	GW OPEN LAB C248	38
39	WORKSTATION OPEN LAB C248	20 A	1			720 VA	1920			1	20 A	GW OPEN LAB C248	40
41	WORKSTATION OPEN LAB C248	20 A	1					1080					42
			Total Load:	11280 VA		11280 VA		9360 VA					
			Total Amps:	96 A		96 A		78 A					

Legend:

Load Classification	Connected Load	Demand Factor	Estimated Demand	Panel Totals	
Power	31920 VA	100.00%	31920 VA		
				Total Conn. Load:	31920 VA
				Total Est. Demand:	31920 VA
				Total Conn.:	89 A
				Total Est. Demand:	89 A

Notes:

Branch Panel: 2CB

Location: Space 6
Supply From:
Mounting: Recessed
Enclosure: Type 1

Volts: 120/208 Wye
Phases: 3
Wires: 4

A.I.C. Rating: 10,000
Mains Type: MLO
Mains Rating: 225 A
MCB Rating:

Notes: REFER TO SINGLE LINE DIAGRAM

CKT	Circuit Description	Trip	Poles	A		B		C		Poles	Trip	Circuit Description	CKT
1	WORKSTATION OPEN LAB C248	20 A	1	720 VA	720 VA					1	20 A	WORKSTATION OPEN LAB C248	2
3	WORKSTATION OPEN LAB C248	20 A	1			540 VA	720 VA			1	20 A	WORKSTATION OPEN LAB C248	4
5	WORKSTATION OPEN LAB C248	20 A	1					720 VA	720 VA	1	20 A	WORKSTATION OPEN LAB C248	6
7	WORKSTATION OPEN LAB C248	20 A	1	720 VA	720 VA					1	20 A	WORKSTATION OPEN LAB C248	8
9	WORKSTATION OPEN LAB C248	20 A	1			720 VA	1080			1	20 A	WORKSTATION OPEN LAB C248	10
11	WORKSTATION OPEN LAB C248	20 A	1					720 VA	720 VA	1	20 A	WORKSTATION OPEN LAB C248	12
13	WORKSTATION OPEN LAB C248	20 A	1	720 VA	720 VA					1	20 A	WORKSTATION OPEN LAB C248	14
15	WORKSTATION OPEN LAB C248	20 A	1			720 VA	1080			1	20 A	WORKSTATION OPEN LAB C248	16
17	WORKSTATION OPEN LAB C248	20 A	1					720 VA	1080	1	20 A	WORKSTATION OPEN LAB C248	18
19	WORKSTATION OPEN LAB C248	20 A	1	720 VA	720 VA					1	20 A	WORKSTATION OPEN LAB C248	20
21	WORKSTATION OPEN LAB C248	20 A	1			1080	720 VA			1	20 A	WORKSTATION OPEN LAB C248	22
23	WORKSTATION OPEN LAB C248	20 A	1					720 VA	720 VA	1	20 A	WORKSTATION OPEN LAB C248	24
25	WORKSTATION OPEN LAB C248	20 A	1	720 VA	720 VA					1	20 A	WORKSTATION OPEN LAB C248	26
27	WORKSTATION OPEN LAB C248	20 A	1			720 VA	720 VA			1	20 A	WORKSTATION OPEN LAB C248	28
29	WORKSTATION OPEN LAB C248	20 A	1					720 VA	720 VA	1	20 A	WORKSTATION OPEN LAB C248	30
31	WORKSTATION OPEN LAB C248	20 A	1	720 VA	720 VA					1	20 A	WORKSTATION OPEN LAB C248	32
33	WORKSTATION OPEN LAB C248	20 A	1			720 VA	900 VA			1	20 A	Power	34
35	WORKSTATION OPEN LAB C248	20 A	1					720 VA	720 VA	1	20 A	WORKSTATION OPEN LAB C248	36
37	WORKSTATION OPEN LAB C248	20 A	1	720 VA	720 VA					1	20 A	WORKSTATION OPEN LAB C248	38
39	WORKSTATION OPEN LAB C248	20 A	1			720 VA	720 VA			1	20 A	WORKSTATION OPEN LAB C248	40
41	WORKSTATION OPEN LAB C248	20 A	1					720 VA	900 VA	1	20 A	WORKSTATION OPEN LAB C248	42
			Total Load:	10080 VA		11160 VA		10620 VA					
			Total Amps:	84 A		94 A		89 A					

Legend:

Load Classification	Connected Load	Demand Factor	Estimated Demand	Panel Totals	
Power	31860 VA	100.00%	31860 VA		
				Total Conn. Load:	31860 VA
				Total Est. Demand:	31860 VA
				Total Conn.:	88 A
				Total Est. Demand:	88 A

Notes:

Branch Panel: EH1CA

Location: Space 123
Supply From:
Mounting: Surface
Enclosure: Type 1

Volts: 480/277 Wye
Phases: 3
Wires: 4

A.I.C. Rating: 14,000
Mains Type: MCB
Mains Rating: 125 A
MCB Rating: 70 A

Notes: REFER TO SINGLE LINE DIAGRAM

CKT	Circuit Description	Trip	Poles	A		B		C		Poles	Trip	Circuit Description	CKT
1	6-AHU-1A	15 A	3	2214	0 VA					3	15 A	6-AHU-1A (STAND BY)	2
3	--	--	--			2214	0 VA			--	--	--	4
5	--	--	--					2214	0 VA	--	--	--	6
7	6-AHU-2A	15 A	3	1107	1107					3	15 A	6-AHU-2A	8
9	--	--	--			1107	1107			--	--	--	10
11	--	--	--					1107	1107	--	--	--	12
13	6-AHU-2A	15 A	3	1107	0 VA					3	15 A	6-AHU-2A (STAND BY)	14
15	--	--	--			1107	0 VA			--	--	--	16
17	--	--	--					1107	0 VA	--	--	--	18
19	6-FHEF-1 - ROOF	30 A	3	6300	0 VA					3	30 A	6-FHEF-1 - ROOF (STAND BY)	20
21	--	--	--			6300	0 VA			--	--	--	22
23	--	--	--					6300	0 VA	--	--	--	24
25													26
27													28
29													30
31													32
33													34
35													36
37													38
39													40
41													42
			Total Load:	11836 VA		11836 VA		11836 VA					
			Total Amps:	43 A		43 A		43 A					

Legend:

Load Classification	Connected Load	Demand Factor	Estimated Demand	Panel Totals	
Receptacle	0 VA	0.00%	0 VA		
Lighting	0 VA	0.00%	0 VA	**Total Conn. Load:**	35508 VA
HVAC	0 VA	0.00%	0 VA	**Total Est. Demand:**	35508 VA
Kitchen Equipment - Non-Dwelling Unit	0 VA	0.00%	0 VA	**Total Conn.:**	43 A
Equipment	0 VA	0.00%	0 VA	**Total Est. Demand:**	43 A
Motor	0 VA	0.00%	0 VA		
Transformer	0 VA	0.00%	0 VA		
Power	35508 VA	100.00%	35508 VA		
Spare	0 VA	0.00%	0 VA		

Notes:

HILLIARD ARCHITECTS INC. COPYRIGHT

FINAL BID DOCUMENTS

Revision 1	**05.02.2014**
Revisions:	Date

CONSULTANTS:

SYSKA HENNESSY GROUP
A member company of SH Group, Inc.

Syska Hennessy Group, Inc.
425 California Street
Suite 700
San Francisco, CA 94104
Tel: 415.288.9060
Fax: 415.835.0385
www.syska.com

REGISTERED PROFESSIONAL ENGINEER
VICTOR G. STIFFAR
No. 11872
Exp. 12/31/14
ELECTRICAL
STATE OF CALIFORNIA

ARCHITECT/ENGINEERS:

ESTABLISHED 1988 HILLIARD ARCHITECTS GOING GREEN

HILLIARD ARCHITECTS, INC
251 Post Street, Suite 620
San Francisco, CA 94108-5017
Tel 415 989 6400, Fax 415 989 3056
www.HilliardArchitects.com

Drawing Title: **PANEL SCHEDULES - 1ST AND 2ND FLOOR**

Approved: Project Director

Project Title: **VA PA BLDG 6 LAB RENOVATION**

Location: **VAPAHCS, PALO ALTO CAMPUS 3801 MIRANDA AVE. PALO ALTO, CA 94304**

Date: **04.17.14** | Checked: **HP** | Drawn: **HP**

Project Number: **640-13-121P**

Building Number: **6**

Drawing Number: **E602**

Dwg. of

Office of Construction and Facilities Management

Department of Veterans Affairs

VA FORM 08-6231

Branch Panel: 2CI

Location: Space 6
Supply From:
Mounting: Recessed
Enclosure: Type 1

Volts: 120/208 Wye
Phases: 3
Wires: 4

A.I.C. Rating: 10,000
Mains Type: MLO
Mains Rating: 225 A
MCB Rating:

Notes: REFER TO SINGLE LINE DIAGRAM

CKT	Circuit Description	Trip	Poles	A		B		C		Poles	Trip	Circuit Description	CKT
1	DELI FRIDGE OPEN LAB C248	20 A	1	1104	180 VA					1	20 A	AHU-1C RECEPT GFCI	2
3	REFRIGERATOR/ FREEZER OPEN LAB C248	20 A	1			1128	720 VA			1	20 A	CONV GFCI OUTLET - ROOF	4
5	REFRIGERATOR/ FREEZER OPEN LAB C248	20 A	1					1128	0 VA	1	0 A	Spare	6
7	REVCO FIDGE UGL2320A C248	20 A	1	1550	0 VA					1	0 A	Spare	8
9	REVCO REL2304A FRIDGE C241	20 A	1			1620	0 VA			1	0 A	Spare	10
11	REVCO REL2304A FRIDGE C241	20 A	1					1620	0 VA	1	0 A	Spare	12
13	REVCO REL2304A FRIDGE C240	20 A	1	1620	1667					3	20 A	COLD ROOM C249	14
15	REVCO REL2304A FRIDGE C240	20 A	1			1620	1667			--	--	--	16
17	UC ULT430A C248	20 A	1					960 VA	1667	--	--	--	18
19	UC ULT430A C248	20 A	1	960 VA	1620					1	20 A	FR MC20SS-SAEE-TS C246	20
21	UC ULT430A C248	20 A	1			960 VA	1620			1	20 A	FR MC20SS-SAEE-TS C246	22
23	Spare	0 A	1					0 VA	1550	1	20 A	REVCO FIDGE UGL2320A C248	24
25	COLD ROOM CONTROL CONSOLE	20 A	3	167 VA	0 VA					1	0 A	Spare	26
27	--	--	--			167 VA	0 VA			1	0 A	Spare	28
29	--	--	--					167 VA	0 VA	1	0 A	Spare	30
31	Spare	0 A	1	0 VA	0 VA					1	0 A	Spare	32
33	Spare	0 A	1			0 VA	0 VA			1	0 A	Spare	34
35	Spare	0 A	1					0 VA	0 VA	1	0 A	Spare	36
37	Spare	0 A	1	0 VA	0 VA					1	0 A	Spare	38
39	Spare	0 A	1			0 VA	0 VA			1	0 A	Spare	40
41	Spare	0 A	1					0 VA	0 VA	1	0 A	Spare	42
			Total Load:	8867 VA		9501 VA		7091 VA					
			Total Amps:	76 A		81 A		59 A					

Legend:

Load Classification	Connected Load	Demand Factor	Estimated Demand	Panel Totals	
Receptacle	0 VA	0.00%	0 VA		
Lighting	0 VA	0.00%	0 VA	**Total Conn. Load:**	25460 VA
HVAC	0 VA	0.00%	0 VA	**Total Est. Demand:**	25460 VA
Kitchen Equipment - Non-Dwelling Unit	0 VA	0.00%	0 VA	**Total Conn.:**	71 A
Equipment	0 VA	0.00%	0 VA	**Total Est. Demand:**	71 A
Motor	0 VA	0.00%	0 VA		
Transformer	0 VA	0.00%	0 VA		
Power	25460 VA	100.00%	25460 VA		
Spare	0 VA	0.00%	0 VA		

Notes:

Branch Panel: 2CG

Location: Space 88
Supply From:
Mounting: Recessed
Enclosure: Type 1

Volts: 120/208 Wye
Phases: 3
Wires: 4

A.I.C. Rating: 10,000
Mains Type: MLO
Mains Rating: 150 A
MCB Rating:

Notes: REFER TO SINGLE LINE DIAGRAM

CKT	Circuit Description	Trip	Poles	A		B		C		Poles	Trip	Circuit Description	CKT
1	Spare	0 A	1	0 VA	0 VA					1	0 A	Spare	2
3	Spare	0 A	1			0 VA	0 VA			1	0 A	Spare	4
5	Spare	0 A	1					0 VA	0 VA	1	0 A	Spare	6
7	Spare	0 A	1	0 VA	0 VA					1	0 A	Spare	8
9	Spare	0 A	1			0 VA	0 VA			1	0 A	Spare	10
11	Spare	0 A	1					0 VA	0 VA	1	0 A	Spare	12
13	Spare	0 A	1	0 VA	0 VA					1	0 A	Spare	14
15	Spare	0 A	1			0 VA	0 VA			1	0 A	Spare	16
17	Spare	0 A	1					0 VA	0 VA	1	0 A	Spare	18
19	Spare	0 A	1	0 VA	0 VA					1	0 A	Spare	20
21	Spare	0 A	1			0 VA	0 VA			1	0 A	Spare	22
23	Spare	0 A	1					0 VA	0 VA	1	0 A	Spare	24
25	Spare	0 A	1	0 VA	0 VA					1	0 A	Spare	26
27	Spare	0 A	1			0 VA	0 VA			1	0 A	Spare	28
29	Spare	0 A	1					0 VA	0 VA	1	0 A	Spare	30
31	Spare	0 A	1	0 VA	0 VA					1	0 A	Spare	32
33	Spare	0 A	1			0 VA	0 VA			1	0 A	Spare	34
35	Spare	0 A	1					0 VA	0 VA	1	0 A	Spare	36
37	Spare	0 A	1	0 VA	0 VA					1	0 A	Spare	38
39	Spare	0 A	1			0 VA	0 VA			1	0 A	Spare	40
41	Spare	0 A	1					0 VA	0 VA	1	0 A	Spare	42
			Total Load:	0 VA		0 VA		0 VA					
			Total Amps:	0 A		0 A		0 A					

Legend:

Load Classification	Connected Load	Demand Factor	Estimated Demand	Panel Totals	
Receptacle	0 VA	0.00%	0 VA		
Lighting	0 VA	0.00%	0 VA	**Total Conn. Load:**	0 VA
HVAC	0 VA	0.00%	0 VA	**Total Est. Demand:**	0 VA
Kitchen Equipment - Non-Dwelling Unit	0 VA	0.00%	0 VA	**Total Conn.:**	0 A
Equipment	0 VA	0.00%	0 VA	**Total Est. Demand:**	0 A
Motor	0 VA	0.00%	0 VA		
Transformer	0 VA	0.00%	0 VA		
Power	0 VA	0.00%	0 VA		
Spare	0 VA	0.00%	0 VA		

Notes:

Branch Panel: 2CE

Location: Space 6
Supply From:
Mounting: Recessed
Enclosure: Type 1

Volts: 120/208 Wye
Phases: 3
Wires: 4

A.I.C. Rating: 10,000
Mains Type: MLO
Mains Rating: 100 A
MCB Rating:

Notes: REFER TO SINGLE LINE DIAGRAM

CKT	Circuit Description	Trip	Poles	A		B		C		Poles	Trip	Circuit Description	CKT
1	LTG OPEN LAB C248	20 A	1	1620	1800					1	20 A	LTG OPEN LAB C248	2
3	LTG OPEN LAB C248	20 A	1			1740	1920			1	20 A	LTG OPEN LAB C248	4
5	LTG. HALLWAY	20 A	1					720 VA	900 VA	1	20 A	HALLWAY RECEPTACLES	6
7	WORKSTATION OPEN LAB C248	20 A	1	720 VA	0 VA					1	20 A	COLD ROOM OUTLETS C249	8
9	WORKSTATION OPEN LAB C248	20 A	1			720 VA							10
11	WORKSTATION OPEN LAB C143	20 A	1					720 VA	720 VA	1	20 A	WORKSTATION OPEN LAB C248	12
13	WORKSTATION OPEN LAB C248	20 A	1	720 VA	720 VA					1	20 A	WORKSTATION OPEN LAB C248	14
15	WORKSTATION OPEN LAB C248	20 A	1			720 VA	720 VA			1	20 A	WORKSTATION OPEN LAB C143	16
17	WORKSTATION OPEN LAB C143	20 A	1					720 VA	720 VA	1	20 A	WORKSTATION OPEN LAB C248	18
19	WATER SOFTENER C242	30 A	1	2400	720 VA					1	20 A	WORKSTATION OPEN LAB C248	20
21	CENTRA R200 DI/D0	30 A	2			2080	720 VA			1	20 A	WORKSTATION OPEN LAB C143	22
23	--	--	--					2080	720 VA	1	20 A	WORKSTATION OPEN LAB C248	24
25	LEAK DETECTOR C242	20 A	1	180 VA	720 VA					1	20 A	WORKSTATION OPEN LAB C248	26
27	Spare	0 A	1			0 VA	1080			1	20 A	WORKSTATION OPEN LAB C248	28
29	Spare	0 A	1					0 VA	2080	2	30 A	LOOP BOOST PUMP C242	30
31	Spare	0 A	1	0 VA	2080					--	--	--	32
33	Spare	0 A	1			0 VA	0 VA			1	0 A	Spare	34
35	Spare	0 A	1					0 VA	0 VA	1	0 A	Spare	36
37	Spare	0 A	1	0 VA	0 VA					1	0 A	Spare	38
39	Spare	0 A	1			0 VA	0 VA			1	0 A	Spare	40
41	Spare	0 A	1					0 VA	0 VA	1	0 A	Spare	42
			Total Load:	11680 VA		9700 VA		9380 VA					
			Total Amps:	98 A		81 A		78 A					

Legend:

Load Classification	Connected Load	Demand Factor	Estimated Demand	Panel Totals	
Receptacle	0 VA	0.00%	0 VA		
Lighting	0 VA	0.00%	0 VA	**Total Conn. Load:**	30760 VA
HVAC	0 VA	0.00%	0 VA	**Total Est. Demand:**	30760 VA
Kitchen Equipment - Non-Dwelling Unit	0 VA	0.00%	0 VA	**Total Conn.:**	85 A
Equipment	0 VA	0.00%	0 VA	**Total Est. Demand:**	85 A
Motor	0 VA	0.00%	0 VA		
Transformer	0 VA	0.00%	0 VA		
Power	22960 VA	100.00%	22960 VA		
Spare	0 VA	0.00%	0 VA		

Notes:

Branch Panel: H2CA

Location: Space 76
Supply From:
Mounting: Recessed
Enclosure: Type 1

Volts: 480/277 Wye
Phases: 3
Wires: 4

A.I.C. Rating: 14,000
Mains Type: MLO
Mains Rating: 225 A
MCB Rating:

Notes: REFER TO SINGLE LINE DIAGRAM

CKT	Circuit Description	Trip	Poles	A		B		C		Poles	Trip	Circuit Description	CKT
1	Spare	0 A	1	0 VA	4800					3	30 A	6-VFD-FHEF-2- ROOF	2
3	Spare	0 A	1			0 VA	4800			--	--	--	4
5	Spare	0 A	1					0 VA	4800	--	--	--	6
7	6-VFD-SF2B1 - ROOF	20 A	3	1094	1094					3	20 A	6-VFD-SF2B2 - ROOF	8
9	--	--	--			1094	1094			--	--	--	10
11	--	--	--					1094	1094	--	--	--	12
13	6-VFD-SF2B3 - ROOF	20 A	3	1094	1094					3	20 A	6-VFD-SF2B4 - ROOF	14
15	--	--	--			1094	1094			--	--	--	16
17	--	--	--					1094	1094	--	--	--	18
19	6-VFD-FHEF-2- ROOF	25 A	3	4800	0 VA					--	--	Space	20
21	--	--	--			4800	0 VA			--	--	Space	22
23	--	--	--					4800	0 VA	--	--	Space	24
25	Space	--	--	0 VA	0 VA					--	--	Space	26
27	Space	--	--			0 VA	0 VA			--	--	Space	28
29	Space	--	--					0 VA	0 VA	--	--	Space	30
31													32
33													34
35													36
37													38
39													40
41													42
			Total Load:	13977 VA		13977 VA		13977 VA					
			Total Amps:	50 A		50 A		50 A					

Legend:

Load Classification	Connected Load	Demand Factor	Estimated Demand	Panel Totals	
Receptacle	0 VA	0.00%	0 VA		
Lighting	0 VA	0.00%	0 VA	**Total Conn. Load:**	41932 VA
HVAC	0 VA	0.00%	0 VA	**Total Est. Demand:**	41932 VA
Kitchen Equipment - Non-Dwelling Unit	0 VA	0.00%	0 VA	**Total Conn.:**	50 A
Equipment	0 VA	0.00%	0 VA	**Total Est. Demand:**	50 A
Motor	0 VA	0.00%	0 VA		
Transformer	0 VA	0.00%	0 VA		
Power	41932 VA	100.00%	41932 VA		
Spare	0 VA	0.00%	0 VA		

Notes:

Branch Panel: 2CH

Location: Space 101
Supply From:
Mounting: Recessed
Enclosure: Type 1

Volts: 120/208 Wye
Phases: 3
Wires: 4

A.I.C. Rating: 10,000
Mains Type: MLO
Mains Rating: 225 A
MCB Rating:

Notes: REFER TO SINGLE LINE DIAGRAM

CKT	Circuit Description	Trip	Poles	A		B		C		Poles	Trip	Circuit Description	CKT
1	FUME HOOD C244	20 A	1	1000	1000					1	20 A	FUME HOOD C244	2
3	FUME HOOD C244	20 A	1			1000	1000			1	20 A	FUME HOOD C244	4
5	UC ULT430A C248	20 A	1					960 VA	0 VA	1	0 A	Spare	6
7	Spare	0 A	1	0 VA	0 VA					1	0 A	Spare	8
9	Spare	0 A	1			0 VA	0 VA			1	0 A	Spare	10
11	Spare	0 A	1					0 VA	0 VA	1	0 A	Spare	12
13	DELI RLR4304A C248	20 A	1	1104	0 VA					1	0 A	Spare	14
15	REVCO FIDGE UGL2320A C248	20 A	1			1620	0 VA			1	0 A	Spare	16
17	REVCO FIDGE UGL2320A C248	20 A	1					1550	1620	1	20 A	REVCO FIDGE UGL2320A C248	18
19	REVCO FIDGE UGL2320A C248	20 A	1	1620	1620					1	20 A	REVCO FIDGE UGL2320A C248	20
21	REVCO FIDGE UGL2320A C248	20 A	1			1550	1620			1	20 A	REVCO FIDGE UGL2320A C248	22
23	REVCO FIDGE UGL2320A C248	20 A	1					1550	1620	1	20 A	REVCO FIDGE UGL2320A C248	24
25	Spare	0 A	1	0 VA	1620					1	20 A	REVCO FIDGE UGL2320A C248	26
27	INC-1 INCUBATOR C240	20 A	1			1152	0 VA			1	0 A	Spare	28
29	INC-1 INCUBATOR C240	20 A	1					1152	1152	1	20 A	INC-1 INCUBATOR C241	30
31	INC-1 INCUBATOR C240	20 A	1	1152	1152					1	20 A	INC-1 INCUBATOR C241	32
33	INC-1 INCUBATOR C240	20 A	1			1152	1152			1	20 A	INC-1 INCUBATOR C241	34
35	INC-1 INCUBATOR C240	20 A	1					1152	1152	1	20 A	INC-1 INCUBATOR C241	36
37	INC-1 INCUBATOR C240	20 A	1	1152	1152					1	20 A	INC-1 INCUBATOR C241	38
39	INC-1 INCUBATOR C240	20 A	1			1152	1152			1	20 A	INC-1 INCUBATOR C241	40
41	Spare	0 A	1					0 VA	1152	1	20 A	INC-1 INCUBATOR C241	42
			Total Load:	12572 VA		12550 VA		13060 VA					
			Total Amps:	105 A		105 A		109 A					

Legend:

Load Classification	Connected Load	Demand Factor	Estimated Demand	Panel Totals	
Receptacle	0 VA	0.00%	0 VA		
Lighting	0 VA	0.00%	0 VA	**Total Conn. Load:**	38182 VA
HVAC	0 VA	0.00%	0 VA	**Total Est. Demand:**	38182 VA
Kitchen Equipment - Non-Dwelling Unit	0 VA	0.00%	0 VA	**Total Conn.:**	106 A
Equipment	0 VA	0.00%	0 VA	**Total Est. Demand:**	106 A
Motor	0 VA	0.00%	0 VA		
Transformer	0 VA	0.00%	0 VA		
Power	38182 VA	100.00%	38182 VA		
Spare	0 VA	0.00%	0 VA		

Notes:

Branch Panel: 2CF

Location: OPEN LAB C248
Supply From:
Mounting: Recessed
Enclosure: Type 1

Volts: 120/208 Wye
Phases: 3
Wires: 4

A.I.C. Rating: 10,000
Mains Type: MLO
Mains Rating: 150 A
MCB Rating:

Notes: REFER TO SINGLE LINE DIAGRAM

CKT	Circuit Description	Trip	Poles	A		B		C		Poles	Trip	Circuit Description	CKT
1	GW OPEN LAB C248	20 A	1	1920	0 VA					1	0 A	Spare	2
3	WORKSTATION OPEN LAB C248	20 A	1			720 VA	0 VA			1	0 A	Spare	4
5	WORKSTATION OPEN LAB C248	20 A	1					900 VA	0 VA	1	0 A	Spare	6
7	Spare	0 A	1	0 VA	0 VA					1	0 A	Spare	8
9	Spare	0 A	1			0 VA	0 VA			1	0 A	Spare	10
11	Spare	0 A	1					0 VA	0 VA	1	0 A	Spare	12
13	Spare	0 A	1	0 VA	0 VA					1	0 A	Spare	14
15	Spare	0 A	1			0 VA	0 VA			1	0 A	Spare	16
17	Spare	0 A	1					0 VA	0 VA	1	0 A	Spare	18
19	Spare	0 A	1	0 VA	0 VA					1	0 A	Spare	20
21	Spare	0 A	1			0 VA	0 VA			1	0 A	Spare	22
23	Spare	0 A	1					0 VA	0 VA	1	0 A	Spare	24
25	Spare	0 A	1	0 VA	0 VA					1	0 A	Spare	26
27	Spare	0 A	1			0 VA	0 VA			1	0 A	Spare	28
29	Spare	0 A	1					0 VA	0 VA	1	0 A	Spare	30
31	Spare	0 A	1	0 VA	0 VA					1	0 A	Spare	32
33	Spare	0 A	1			0 VA	0 VA			1	0 A	Spare	34
35	Spare	0 A	1					0 VA	0 VA	1	0 A	Spare	36
37	Spare	0 A	1	0 VA	0 VA					1	0 A	Spare	38
39	Spare	0 A	1			0 VA	0 VA			1	0 A	Spare	40
41	Spare	0 A	1					0 VA	0 VA	1	0 A	Spare	42
			Total Load:	1920 VA		720 VA		900 VA					
			Total Amps:	16 A		6 A		8 A					

Legend:

Load Classification	Connected Load	Demand Factor	Estimated Demand	Panel Totals	
Receptacle	0 VA	0.00%	0 VA		
Lighting	0 VA	0.00%	0 VA	**Total Conn. Load:**	3540 VA
HVAC	0 VA	0.00%	0 VA	**Total Est. Demand:**	3540 VA
Kitchen Equipment - Non-Dwelling Unit	0 VA	0.00%	0 VA	**Total Conn.:**	10 A
Equipment	0 VA	0.00%	0 VA	**Total Est. Demand:**	10 A
Motor	0 VA	0.00%	0 VA		
Transformer	0 VA	0.00%	0 VA		
Power	3540 VA	100.00%	3540 VA		
Spare	0 VA	0.00%	0 VA		

Notes:

HILLIARD ARCHITECTS INC. COPYRIGHT

FINAL BID DOCUMENTS

Revisions:	Date
Revision 1	**05.02.2014**

CONSULTANTS:

REGISTERED PROFESSIONAL ENGINEER — VICTOR G. STEFFEN — No. 11872 — Exp. 12/31/14 — ELECTRICAL — STATE OF CALIFORNIA

ARCHITECT/ENGINEERS:

ESTABLISHED 1988 HILLIARD ARCHITECTS GOING GREEN
HILLIARD ARCHITECTS, INC
251 Post Street, Suite 620
San Francisco, CA 94108-5017
Tel 415 989 6400, Fax 415 989 3056
www.HilliardArchitects.com

Drawing Title: **PANEL SCHEDULES - 2ND FLOOR**

Approved: Project Director

Project Title: **VA PA BLDG 6 ADMINISTRATIVE EXPANSION**

Location: **VAPAHCS, PALO ALTO CAMPUS 3801 MIRANDA AVE. PALO ALTO, CA 94304**

Date: **04.17.14** | Checked: **SHG** | Drawn: **Author**

Project Number: **640-13-121P**

Building Number: **6**

Drawing Number: **E603**

Dwg. of

Office of Construction and Facilities Management

Department of Veterans Affairs

VA FORM 08-6231

Branch Panel: EM2CA

Location: Space 6
Supply From:
Mounting: Recessed
Enclosure: Type 1

Volts: 120/208 Wye
Phases: 3
Wires: 4

A.I.C. Rating: 10,000
Mains Type: MLO
Mains Rating: 225 A
MCB Rating:

Notes: REFER TO SINGLE LINE DIAGRAM

CKT	Circuit Description	Trip	Poles	A		B		C		Poles	Trip	Circuit Description	CKT
1	INC-1 INCUBATOR C241	20 A	1	1152	690 VA					1	20 A	FLAMMABLE FREEZER C244	2
3	INC-1 INCUBATOR C240	20 A	1			1152	0 VA			1	0 A	Spare	4
5	Spare	0 A	1					0 VA	500 VA	1	20 A	NITROGEN MANIFOLD	6
7	FREEZER FARM C245	20 A	1	1840	1980					1	25 A	FREEZER FARM C245	8
9	FREEZER FARM C245	20 A	1			2300	2160			1	25 A	FREEZER FARM C245	10
11	FREEZER FARM C245	20 A	1					2300	1840	1	20 A	FREEZER FARM C245	12
13	BIOSAFETY NU-425-600 C241	20 A	1	1560	1840					1	20 A	FREEZER FARM C245	14
15	BIOSAFETY NU-425-500 C240	20 A	1			1560	0 VA			1	0 A	Spare	16
17	BIOSAFETY NU-425-600 C240	20 A	1					1560	180 VA	1	20 A	FCU-2A3 CONDENSATE PUMP	18
19	BIOSAFETY CAB BIO1335 C241	20 A	1	1560	5221					3	100 A	PANEL EM2CC	20
21	BIOSAFETY CAB BIO1335 C240	20 A	1			1560	5798			--	--	--	22
23									3492	--	--	--	24
25													26
27													28
29													30
31													32
33													34
35													36
37													38
39													40
41													42
			Total Load:	15843 VA		14530 VA		11712 VA					
			Total Amps:	136 A		125 A		98 A					

Legend:

Load Classification	Connected Load	Demand Factor	Estimated Demand	Panel Totals	
Receptacle	0 VA	0.00%	0 VA		
Lighting	0 VA	0.00%	0 VA	**Total Conn. Load:**	43645 VA
HVAC	0 VA	0.00%	0 VA	**Total Est. Demand:**	43645 VA
Kitchen Equipment - Non-Dwelling Unit	0 VA	0.00%	0 VA	**Total Conn.:**	121 A
Equipment	0 VA	0.00%	0 VA	**Total Est. Demand:**	121 A
Motor	0 VA	0.00%	0 VA		
Transformer	0 VA	0.00%	0 VA		
Power	40980 VA	100.00%	40980 VA		
Spare	0 VA	0.00%	0 VA		

Notes:

Branch Panel: EM2CC

Location: Space 6
Supply From: EM2CA
Mounting: Surface
Enclosure: Type 1

Volts: 120/208 Wye
Phases: 3
Wires: 4

A.I.C. Rating: 10,000
Mains Type: MLO
Mains Rating: 100 A
MCB Rating:

Notes: REFER TO SINGLE LINE DIAGRAM

CKT	Circuit Description	Trip	Poles	A		B		C		Poles	Trip	Circuit Description	CKT
1	DDC CONTROL PANEL	20 A	1	180 VA	1330					1	20 A	LTG. EM 2ND FLOOR	2
3	ACCU-A3 ROOF	40 A	2			1296	1296			2	40 A	ACCU-2A1 ROOF	4
5	--	--	--					1296	1296	--	--	--	6
7	ACCU-A2 ROOF	40 A	2	1296	0 VA					1	0 A	Spare	8
9	--	--	--			1296	0 VA			1	0 A	Spare	10
11	Spare	0 A	1					0 VA	0 VA	1	0 A	Spare	12
13	LTG. EM 2ND FLOOR	20 A	1	1335	0 VA					1	0 A	Spare	14
15	VENTURI CONTROL VALVE XFMR	20 A	1			650 VA	180 VA			1	20 A	DDC CONTROL PANEL	16
17	AHU 1C CONTROL PANEL	20 A	1					360 VA	540 VA	1	20 A	FUME HOOD CONTROLLER	18
19	BSC CONTROLLER	20 A	1	1080	0 VA					1	0 A	Spare	20
21	DDC CONTROLLER LAB AREA	20 A	1			1080	0 VA			1	0 A	Spare	22
23	Space	--	--					0 VA	0 VA	--	--	Space	24
25	Space	--	--	0 VA	0 VA					--	--	Space	26
27	Space	--	--			0 VA	0 VA			--	--	Space	28
29	Space	--	--					0 VA	0 VA	--	--	Space	30
31													32
33													34
35													36
37													38
39													40
41													42
			Total Load:	5221 VA		5798 VA		3492 VA					
			Total Amps:	46 A		51 A		29 A					

Legend:

Load Classification	Connected Load	Demand Factor	Estimated Demand	Panel Totals	
Receptacle	0 VA	0.00%	0 VA		
Lighting	0 VA	0.00%	0 VA	**Total Conn. Load:**	14511 VA
HVAC	0 VA	0.00%	0 VA	**Total Est. Demand:**	14511 VA
Kitchen Equipment - Non-Dwelling Unit	0 VA	0.00%	0 VA	**Total Conn.:**	40 A
Equipment	0 VA	0.00%	0 VA	**Total Est. Demand:**	40 A
Motor	0 VA	0.00%	0 VA		
Transformer	0 VA	0.00%	0 VA		
Power	11846 VA	100.00%	11846 VA		
Spare	0 VA	0.00%	0 VA		

Notes:

HILLIARD ARCHITECTS INC. COPYRIGHT

FINAL BID DOCUMENTS

Revisions:	Date
Revision 1	**05.02.2014**

CONSULTANTS:

SYSKA HENNESSY GROUP
A member company of SH Group, Inc.

Syska Hennessy Group, Inc.
425 California Street
Suite 700
San Francisco, CA 94104
Tel: 415.288.9060
Fax: 415.835.0385
www.syska.com

REGISTERED PROFESSIONAL ENGINEER
VICTOR G. STEFFAN
No. 11872
Exp. 12/31/14
ELECTRICAL
STATE OF CALIFORNIA

ARCHITECT/ENGINEERS:

ESTABLISHED 1988 HILLIARD ARCHITECTS GOING GREEN

HILLIARD ARCHITECTS, INC
251 Post Street, Suite 620
San Francisco, CA 94108-5017
Tel 415 989 6400, Fax 415 989 3056
www.HilliardArchitects.com

Drawing Title
PANEL SCHEDULES - 2ND FLOOR

Approved: Project Director

Project Title
VA PA BLDG 6 LAB RENOVATION

Location
VAPAHCS, PALO ALTO CAMPUS
3801 MIRANDA AVE. PALO ALTO, CA 94304

Date **04.17.14** | Checked **Author** | Drawn **Author**

Project Number **640-13-121P**
Building Number
Drawing Number **E604**
Dwg. of

Office of Construction and Facilities Management
Department of Veterans Affairs

VA FORM 08-6231

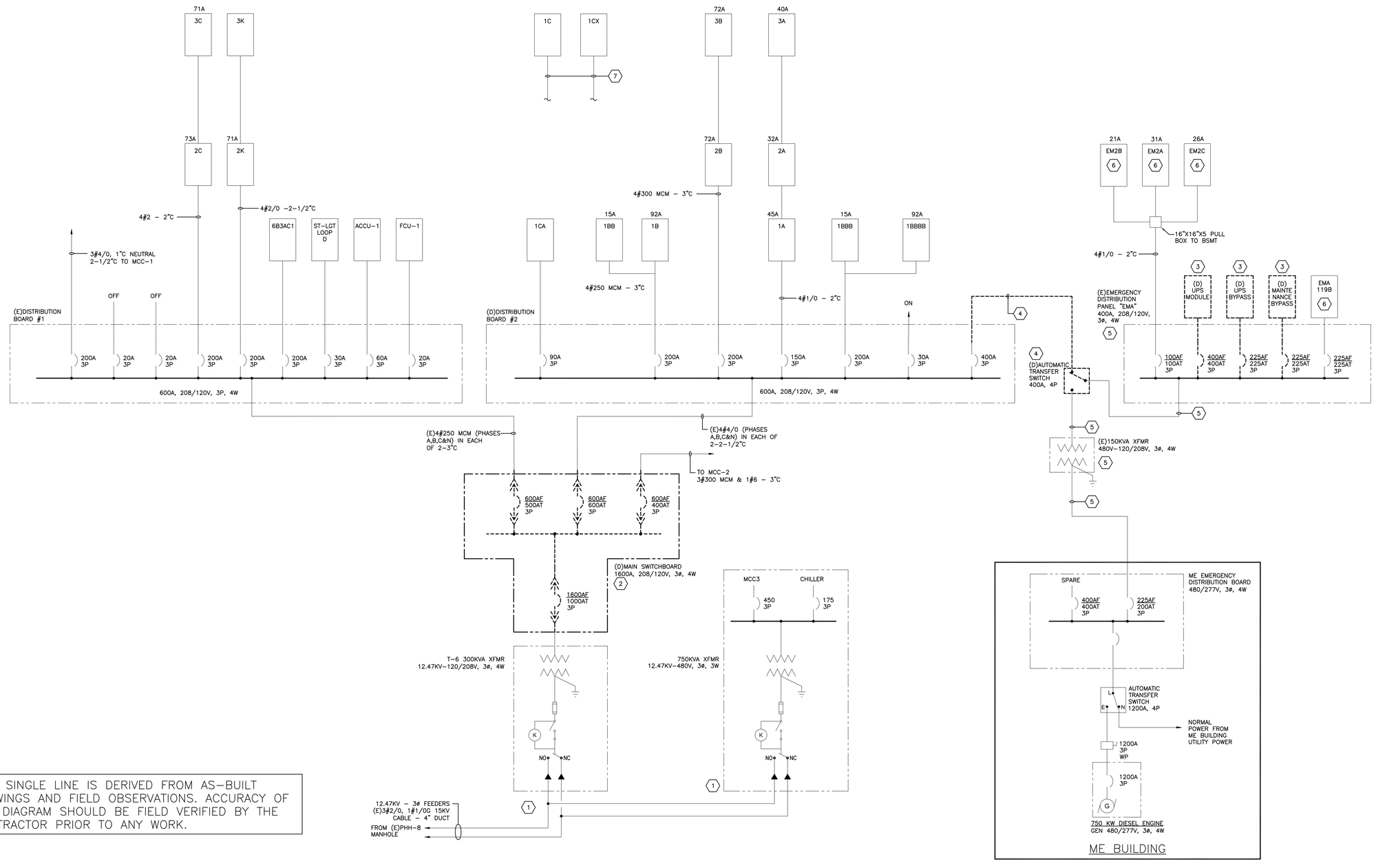

THIS SINGLE LINE IS DERIVED FROM AS-BUILT DRAWINGS AND FIELD OBSERVATIONS. ACCURACY OF THE DIAGRAM SHOULD BE FIELD VERIFIED BY THE CONTRACTOR PRIOR TO ANY WORK.

KEY NOTES:

1. (E) MV FEEDER SHALL BE RE-USED.
2. DEMO (E) MAIN SWITCHBOARD. (E) INCOMING SERVICE CONDUIT AND CONDUCTORS FROM (E) 300 XFMR TO REMAIN. DISCONNECT (E) SERVICE CONDUCTORS AND CONDUIT AND (E) DOWNSTREAM DISTRIBUTION FEEDERS AND MAKE-SAFE FOR RE-USE.
3. DEMO EXISTING UPS SYSTEM, INCLUDING FEEDERS AND OTHER RELATED EQUIPMENT AND DEVICES. CONTRACTOR TO PROVIDE DEMOLITION SHOP DRAWINGS AND PERFORM COMPLETE CIRCUIT TRACING AND FIELD VERIFICATION TO COMPLETELY REMOVE THE SYSTEM.
4. DEMO (E) ATS AND ASSOCIATED FEEDER THAT IS CONNECTED TO (E) DISTRIBUTION BOARD #2.
5. (E) EMERGENCY DISTRIBUTION PANEL EMA AND (E) 150 KVA FXMR TO REMAIN INCLUDING ASSOCIATED FEEDERS INDICATED.
6. (E) EMERGENCY PANELS TO REMAIN.
7. CONTRACTOR TO FIELD VERIFY CONNECTION OF EXISTING PANELS. REPLACE WITH NEW 42 POLE PANELS WITH THE SAME RATING. RE-USE EXISTING CONDUIT AND REPLACE FEEDER WITH NEW WIRING BUT SAME RATING.

SHEET NOTES:

1. ELECTRICAL EQUIPMENT SHOWN ARE EXISTING, UON.
2. REFER TO E702 FOR SINGLE LINE DIAGRAM FOR NEW WORK.
3. REFER TO ES100 AND ES101 FOR ADDITIONAL INFORMATION.
4. DEMOLITION SHALL BE COORDINATED WITH NEW WORK USING A PHASING PLAN TO MINIMIZE THE DOWNTIME FROM THE POWER SHUT-DOWN. CONTRACTOR SHALL DEVELOP A COMPLETE PHASING PLAN AND ACQUIRE VA APPROVAL.

HILLIARD ARCHITECTS INC. COPYRIGHT 2008

FINAL BID DOCUMENTS

Revisions:	Date
ISSUED AS 60% PROGRESS SET	11.01.2013

CONSULTANTS:

SYSKA HENNESSY GROUP
A member company of SH Group, Inc.

Syska Hennessy Group, Inc.
425 California Street
Suite 700
San Francisco, CA 94104
Tel: 415.288.9060
Fax: 415.835.0385
www.syska.com

REGISTERED PROFESSIONAL ENGINEER
VICTOR G. STEFEN
No. 11872
Exp. 12/31/14
ELECTRICAL
STATE OF CALIFORNIA

ARCHITECT/ENGINEERS:

ESTABLISHED 1988 HILLIARD ARCHITECTS GOING GREEN

HILLIARD ARCHITECTS, INC
251 Post Street, Suite 620
San Francisco, CA 94108-5017
Tel 415 989 6400, Fax 415 989 3056
www.HilliardArchitects.com

Drawing Title: **SINGLE LINE DIAGRAM - DEMO**

Approved: Project Director

Project Title: **VA PA BLDG 6 LAB RENOVATION**

Location: **VAPAHCS - PALO ALTO CAMPUS 3801 MIRANDA AVE, PALO ALTO, CA 94304**

Date: **04.17.2014** | Checked: **HP** | Drawn: **AF**

Project Number: **640-13-121P**

Building Number: **6**

Drawing Number: **E701**

Dwg. - of -

Office of Construction and Facilities Management

Department of Veterans Affairs

VA FORM 08-6231

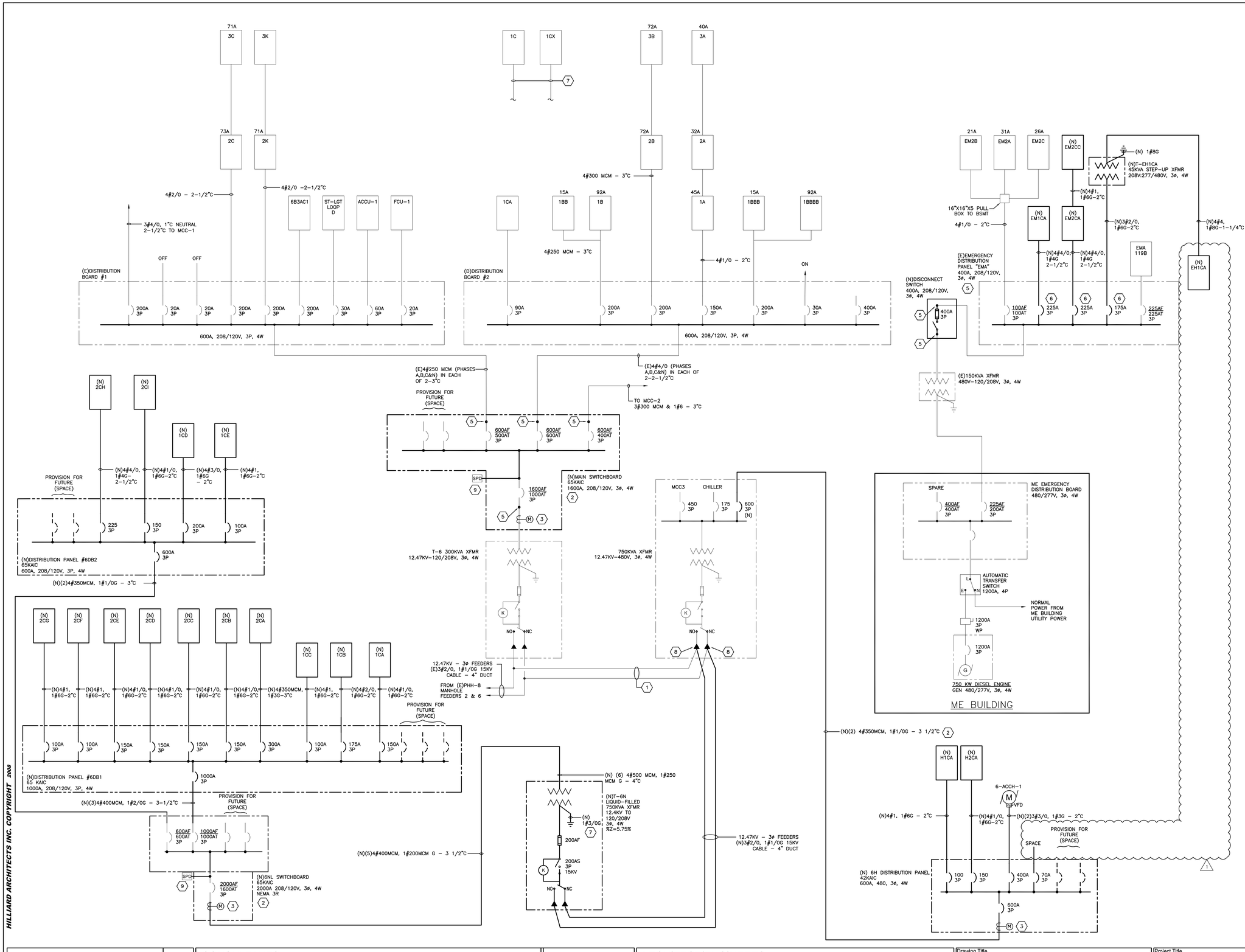

KEY NOTES:

1. PROVIDE NEW MEDIUM VOLTAGE FEEDER TO TERMINATE FROM THE PRIMARY SIDE OF (E) 750 KVA TRANSFORMER TO THE (N) 750 KVA TRANSFORMER T-6N.
2. PROVIDE (2) NEW 600A 480V FEEDER FROM (E) 480V MANHOLE AT 'ME' BUILDING.
3. PROVIDE POWER METERING (SCHNEIDER ELECTRIC #PM800) WHICH RECORD, STORE AND TREND VOLTAGE, CURRENT, KW, KWH, KVA, KVAR, POWER FACTOR, VOLTAGE AND CURRENT TOTAL HARMONIC DISTORTION. PROVIDE A COMPLETE METERING SYSTEM WHICH INCLUDE SERVER WITH METERING SOFTWARE AND METERING DEVICES. COORDINATE WITH MEP DRAWINGS FOR ALL METERING DEVICES.
4. DRY-TYPE TRANSFORMER SHALL BE HARMONIC MITIGATING.
5. RECONNECT EXISTING FEEDERS TO NEW BREAKER ON NEW DISTRIBUTION BOARD. EXISTING FFEDERS INTENDED TO BE REUSED SHALL BE TESTED TO PER SPECIFICATIONS TO DETERMINE SUITABILITY FOR REUSE.
6. PROVIDE (N) BREAKER IN (E) EMERGENCY DISTRIBUTION PANEL EMA AS INDICATED.
7. PROVIDE GROUND RODS PER THE SPECIFICATIONS. RESISTANCE TO NOT BE MORE THAN 25 OHMS.
8. PROVIDE NEW 200A LOADBREAK FEED-THRU INSERT (ELASTIMOLD #1602A3R DESIGN BASIS) TO ALLOW FOR (2) TAPS PER PHASE:
   - (E) 15 KV CABLES TO (E) 750 KVA XFMR;
   - (N) 15 KV CABLES TO (N) 750 KVA XFMR.
   PROVIDE ALL NECESSARY HARDWARE AND APPURTENANCES TO RENDER A COMPLETE AND OPERATIONAL MV FEEDER EXTENSION TO (N) 750 KVA XFMR FROM (E) 750 KVA XFMR.
9. PROVIDE SPD WITH INTEGRAL DISCONNECT SWITCH PER SPECIFICATIONS. COORDINATE NEMA ENCOSURE RATING WITH EXACT SWITCHBOARD INSTALLATION LOCATION IN THE FIELD PER THE SPECIFICATIONS.

SHEET NOTES:

1. ALL EQUIPMENT ARE EXISTING UON.
2. ALL MEDIUM VOLTAGE FEEDER AND EQUIPMENT SHALL BE COORDINATED WITH VA ENGINEERING AND ON-GOING MAJOR PROJECT.
3. NEW WORK SHALL BE COORDINATED WITH A PHASING PLAN TO MINIMIZE DOWNTIME DUE TO POWER SHUT-DOWN.
4. GROUND ROD USED FOR THIS PROJECT SHALL BE TESTED TO CONFIRM GROUND RESISTANCE IS LESS THAN 25 OHMS.

HILLIARD ARCHITECTS INC. COPYRIGHT 2008

FINAL BID DOCUMENTS

Revisions:	Date
Revision 1	05.02.2014

CONSULTANTS:

SYSKA HENNESSY GROUP
A member company of SH Group, Inc.
Syska Hennessy Group, Inc.
425 California Street
Suite 700
San Francisco, CA 94104
Tel: 415.288.9060
Fax: 415.835.0385
www.syska.com

REGISTERED PROFESSIONAL ENGINEER VICTOR G. STEFFEN No. 11872 Exp. 12/31/14 ELECTRICAL STATE OF CALIFORNIA

ARCHITECT/ENGINEERS:

HILLIARD ARCHITECTS ESTABLISHED 1988 GOING GREEN
HILLIARD ARCHITECTS, INC
251 Post Street, Suite 620
San Francisco, CA 94108-5017
Tel 415 989 6400, Fax 415 989 3056
www.HilliardArchitects.com

Drawing Title	SINGLE LINE DIAGRAM - NEW WORK
Approved: Project Director	
Project Title	VA PA BLDG 6 LAB RENOVATION
Project Number	640-13-121P
Building Number	6
Location	VAPAHCS - PALO ALTO CAMPUS, 3801 MIRANDA AVE, PALO ALTO, CA 94304
Date	04.17.14
Checked	HP
Drawn	AF
Drawing Number	E702
Dwg.	- of -

Office of Construction and Facilities Management
Department of Veterans Affairs

VA FORM 08-6231

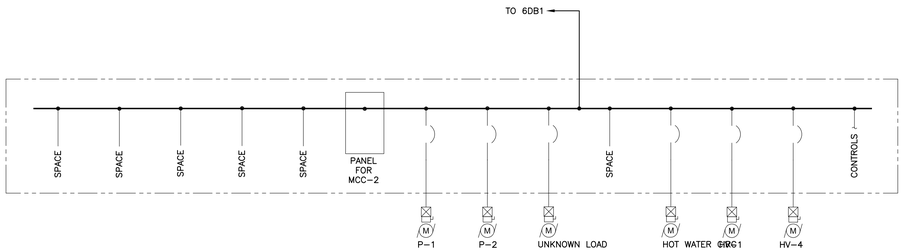

01 MCC-1 SINGLE LINE DIAGRAM
SCALE: NONE

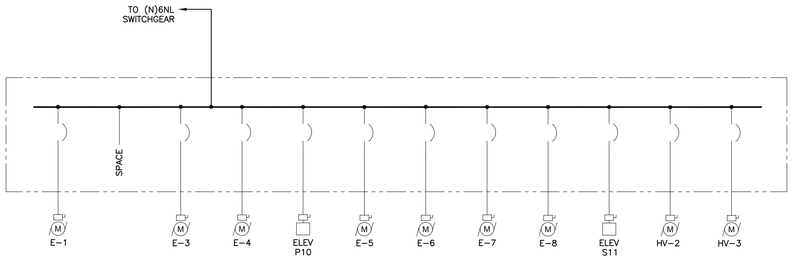

02 MCC-2 SINGLE LINE DIAGRAM
SCALE: NONE

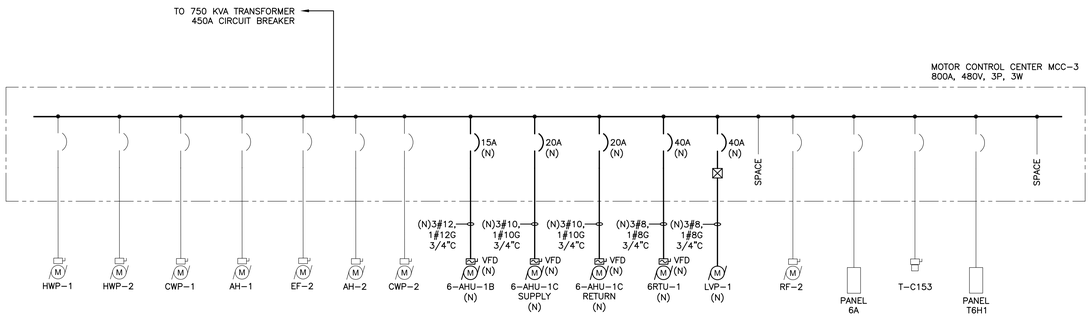

03 MCC-3 SINGLE LINE DIAGRAM
SCALE: NONE

KEY NOTES:

1. -

SHEET NOTES:

1. CONTRACTOR TO AS-BUILT ON THIS SHEET THE CONNECTION FOR THE DEMOLISHED PUMPS LOCATED IN THE BASEMENT, AS WELL AS THE DEMOLISHED EXHAUST FAN ON THE ROOF.
2. ALL ELECTRICAL EQUIPMENT SHOWN ARE EXISTING, UON.
3. REFER TO SHEET E702 FOR CONTINUATION.

HILLIARD ARCHITECTS INC. COPYRIGHT 2008

FINAL BID DOCUMENTS

Revisions:	Date
ISSUED AS 60% PROGRESS SET	11.01.2013

CONSULTANTS:

SYSKA HENNESSY GROUP
A member company of SH Group, Inc.
Syska Hennessy Group, Inc.
425 California Street
Suite 700
San Francisco, CA 94104
Tel: 415.288.9060
Fax: 415.835.0385
www.syska.com

REGISTERED PROFESSIONAL ENGINEER VICTOR G. STEFFEN No. 11872 Exp. 12/31/14 ELECTRICAL STATE OF CALIFORNIA

ARCHITECT/ENGINEERS:

ESTABLISHED 1988 HILLIARD ARCHITECTS GOING GREEN
HILLIARD ARCHITECTS, INC
251 Post Street, Suite 620
San Francisco, CA 94108-5017
Tel 415 989 6400, Fax 415 989 3056
www.HilliardArchitects.com

Drawing Title	SINGLE LINE DIAGRAM - MCC'S
Approved: Project Director	
Project Title	VA PA BLDG 6 LAB RENOVATION
Location	VAPAHCS - PALO ALTO CAMPUS 3801 MIRANDA AVE, PALO ALTO, CA 94304
Date	04.17.2014
Checked	HP
Drawn	AF
Project Number	640-13-121P
Building Number	6
Drawing Number	E703
Dwg.	- of -

Office of Construction and Facilities Management
Department of Veterans Affairs

VA FORM 08-6231

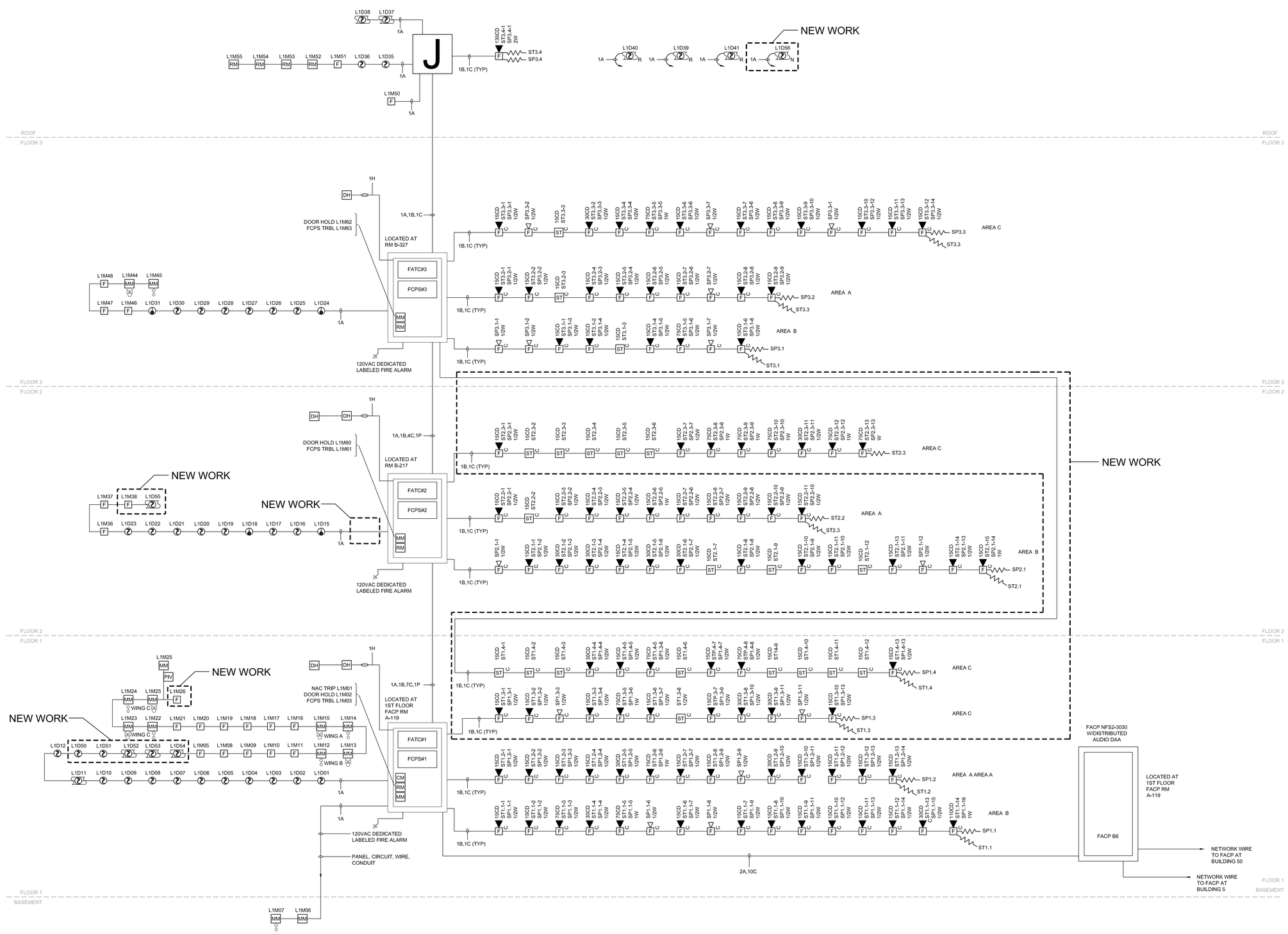

KEY NOTES:

1. -

SHEET NOTES:

1. CONTRACTOR SHALL FIELD VERIFY ACCURACY OF RISER DIAGRAM. PROVIDE RED LINE MARKUPS FOR ANY CORRECTIONS.
2. FOR ALL EXISTING DEVICES COMPLY WITH LIFE SAFETY MATRIX USED FOR THE BUILDING.
3. ALL NEW DUCT SMOKE DETECTING DEVICES SHALL AT A MINIMUM BE CAPABLE OF: SOUNDING BUILDING EVACUATION ALARM, SIGNAL LOCAL FIRE STATION, STOP EXHAUST FANS AT AIR HANDLER, RECALL ALL ELEVATIONS, COMMUNICATE WITH BMS TO SHUT DOWN ALL EQUIPMENT, COMMUNICATE WITH FIRE ALARM CONTROL PANEL.

SCOPE OF WORK

THE SCOPE OF THIS PROJECT IS TO INSTALL NEW FIRE LIFE SAFETY SYSTEMS IN RENOVATED LAB AT BUILDINGS 6. CONNECT NEW SYSTEM TO EXISTING LIFE SAFETY SYSTEM AT BUILDING 6.

BUILDING OCCUPANCY:

BUILDINGS 6 OCCUPANCY TYPE B

SYSTEM TYPE:

NETWORKED NOTIFIER STYLE 7 (CLASS A)

INITIATING DEVICE CIRCUIT (IDC) STYLE B (CLASS B)

SIGNALING DEVICE CIRCUIT (SLC) STYLE 4 (CLASS B)

NOTIFICATION APPLIANCE CIRCUIT (NAC) STYLE Y (CLASS B)

A. MULTI-CHANNEL DIGITAL VOICE WITH MANUAL SELECTION BY ZONE OR BUILDING.

BUILDINGS 5,6,50 ARE GENERAL ALARM AND EVACUATION

WIRE LEGEND

A = 2/#16 TWISTED - SIGNALING LINE CIRCUIT
B = 2/#12 - STROBES
C = 2/#16 TWISTED SHIELDED - SPEAKERS
H = 2/#14 - DOOR HOLDERS
N = 2/#18 TWISTED SHIELDED- ANNUNCIATOR DATA (EIA-485)
P = 2/#14 - ANNUNCIATOR POWER (24vdc)

APPLICABLE CODES:

NFPA 101, 2010 EDITION

DEPARTMENT OF VETERANS AFFAIRS

FIRE PROTECTION MANUAL, SIXTH EDITION

NFPA 20, 2010 EDITION

NFPA 70 2010 EDITION

NFPA 72 2010 EDITION

HILLIARD ARCHITECTS INC. COPYRIGHT 2008

FINAL BID DOCUMENTS

Revisions:	Date
ISSUED AS 60% PROGRESS SET	11.01.2013

VA FORM 08-6231

CONSULTANTS:

SYSKA HENNESSY GROUP
A member company of SH Group, Inc.

Syska Hennessy Group, Inc.
425 California Street
Suite 700
San Francisco, CA 94104
Tel: 415.288.9060
Fax: 415.835.0385
www.syska.com

REGISTERED PROFESSIONAL ENGINEER
VICTOR G. STEFEN
No. 11872
Exp.12/31/14
ELECTRICAL
STATE OF CALIFORNIA

ARCHITECT/ENGINEERS:

ESTABLISHED 1988 HILLIARD ARCHITECTS GOING GREEN

HILLIARD ARCHITECTS, INC
251 Post Street, Suite 620
San Francisco, CA 94108-5017
Tel 415 989 6400, Fax 415 989 3056
www.HilliardArchitects.com

Drawing Title: **SINGLE LINE DIAGRAM - FIRE ALARM**

Approved: Project Director

Project Title: **VA PA BLDG 6 LAB RENOVATION**

Location: **VAPAHCS - PALO ALTO CAMPUS 3801 MIRANDA AVE, PALO ALTO, CA 94304**

Date: **04.17.2014** | Checked: **HP** | Drawn: **AF**

Project Number: **640-13-121P**

Building Number: **6**

Drawing Number: **E704**

Dwg. - of -

Office of Construction and Facilities Management

Department of Veterans Affairs