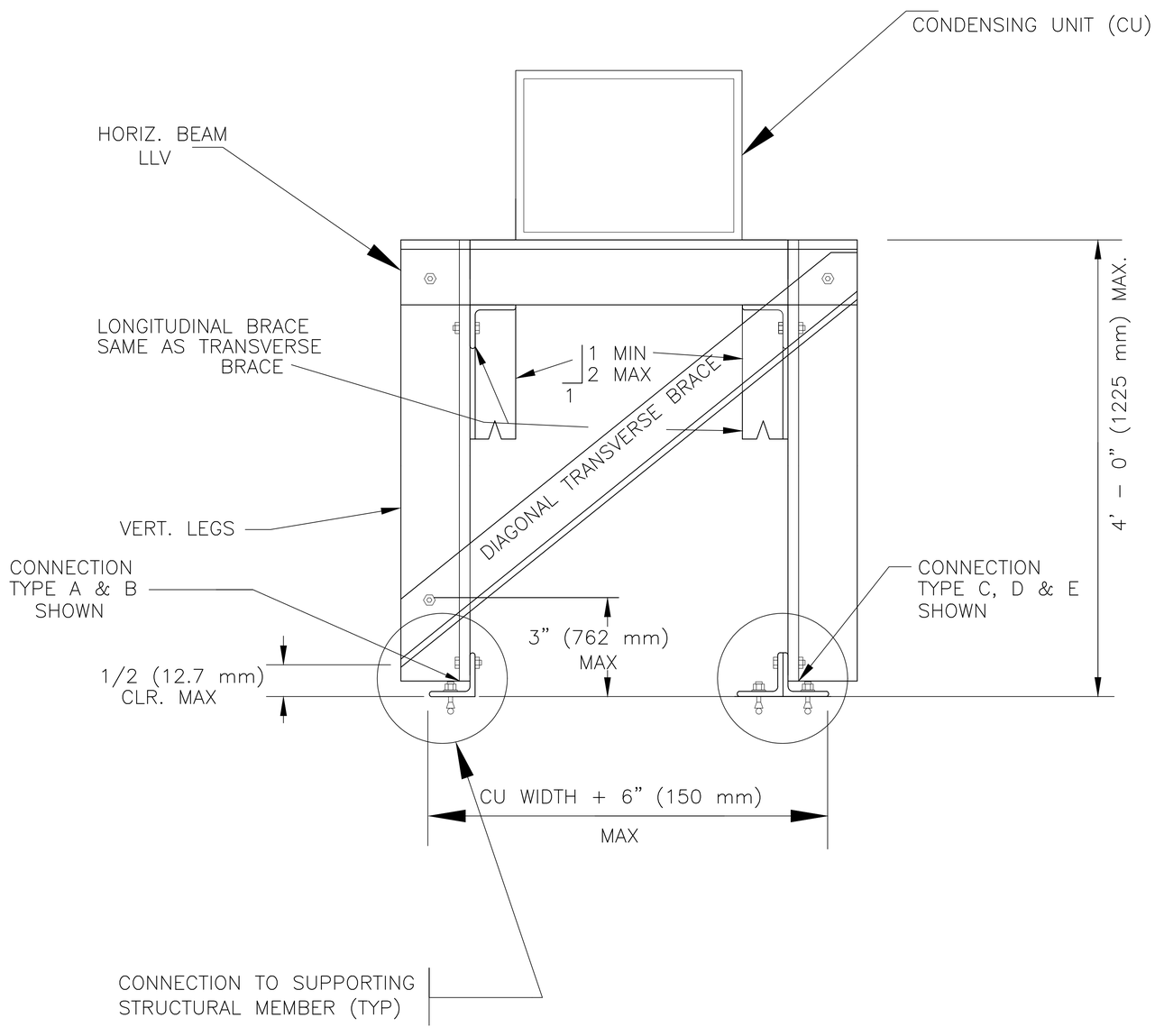

FLOOR SUPPORTED EQUIPMENT

NO SCALE