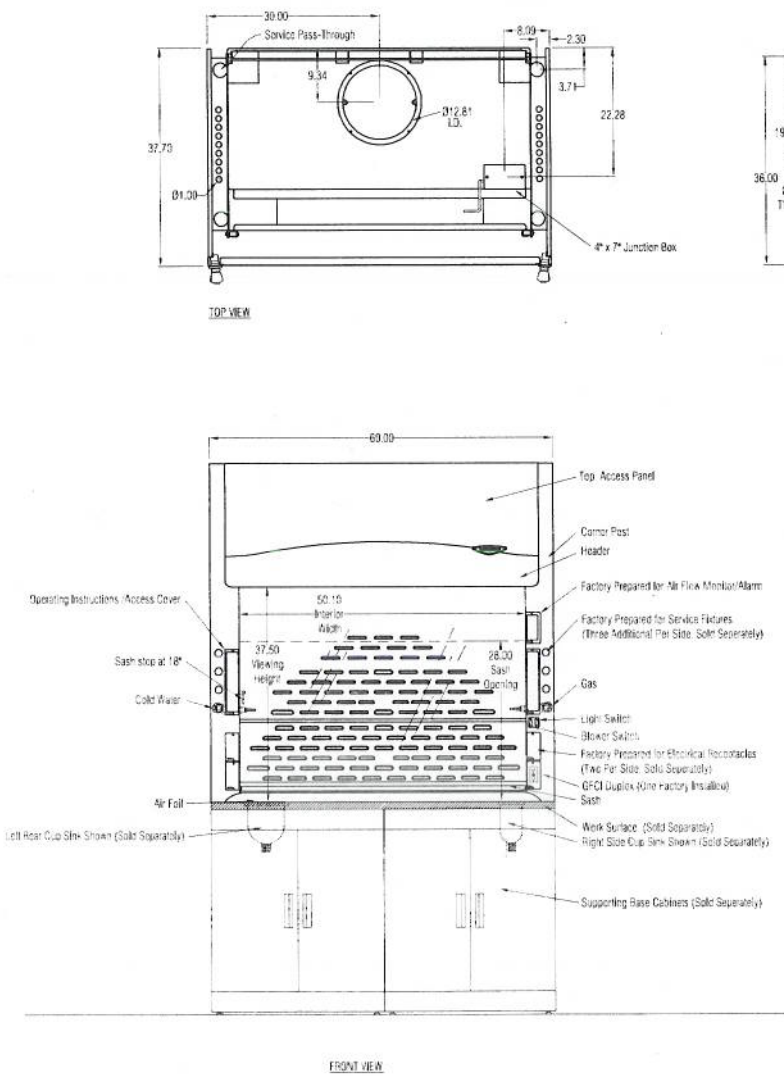

GENERAL DESCRIPTION

5' Protector XStream Laboratory Hood
Model: 110 51 0002

Exterior Superstructure
* Double Wall Construction * 18 Gauge Cold Rolled Steel

Interior Superstructure
* Galvanized Steel (standard)

Left / Right Facia:
* Powder Coated Steel * Color: Glacier White

Liner Material
* Molded Composite Sheet

Side Panels
* Both Sides * Removable * Color: Glacier White

Baffles
* Molded Composite Sheet

Interior Access Panels
* Right and Left Sides
* Gasket Provided

Corner Post with Access Covers
* Right and Left Sides
* 18 Gauge Cold Rolled Steel

Air Foil
* Cold Rolled Steel * Powder Coat Finish

Sash
* Vertical Travel
* Tempered Safety Glass
* Counter Weighted and Balanced
* Pulley System
* Sash Stop @ 18"

Electrical Fixtures
* Fluorescent Light and Tubes w/ Switch
* Duplex, 115VAC / 60HZ / 20A/ GFCI

Alarm / Monitor
* None Provided

Wiring
* Fume Hood Wired at Factory
* Electrical Connection made inside 4x7 Junction Box
* 100-115V, 50/60 Hz

VAV Preparations
* None Requested

Service Fixtures
* Labconco * Color-Coded Hooded Handle * Front Loading
* Parts Included to convert standard Fixtures to Vac or Air

Service	Service	Color
Cold	Cold Water	Blue
Gas	Gas	Blue
Air	Compressed Air	Orange
Vac	Vacuum	Yellow

Plumbing
* Connections Made with Swagelock Compression Fittings
* Final connection by others
* Pre-Piped to Valve Outlet
* Standard Water Piping is 1/4" Copper Tubing
* Air and Vac Piping is 1/4" Copper Tubing
* Standard Gas Piping is 1/4" Brass Tubing

Face velocity (FPM)		Volumetric Rate (CFM)
Sash at full open	Sash at 60% (18")	@ Static Pressure (inches H2O)
100	160	930, 0.32"
80	128	745, 0.20"
60	96	560, 0.12"
50*	80	465, 0.08"
40*	64	370, 0.05"

*There is not a written standard that would suggest a design face velocity below 60 fpm. This data is for informational purposes only.

Work Surface (Sold Separately)
* Black Epoxy Work Surface, Model 95035-XX (See below for XX)
* No cup sink # 00
* Cup Sink Right Rear # 01
* Cup Sink Right Side # 02
* Cup Sink Left Rear # 10
* Cup Sink Left Side # 20
* Cup Sink Left and Right Rear # 11
* Cup Sink Left and Right Side # 22

Cup Sink (Sold Separately)
* 4005200

Required Accessories (Sold Separately)
* Remote Blower
* Supporting Base

Assembly and Crating
* Pre-Assembled
* Palletized

SCALE: Scaled to fit

FUME HOODS for:

Protecting your Laboratory Environment
LABCONCO

Gate: 10-30-2012
Drawing #: 110 51 0002
Drawn By: Luke Savage
Checked By:
Approved By:
Sheet No.

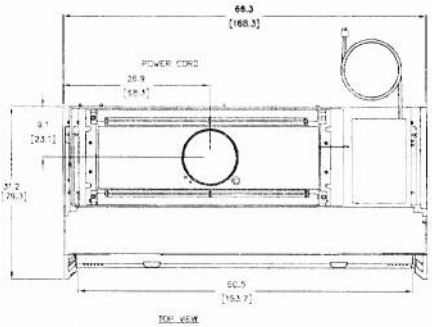

TOP VIEW

Technical Specifications	
Nominal Width	60" (1524 cm)
Actual Width	66.3" (1684 cm)
Shipping Weight	715 lbs (324 kg)
Shipping Weight Including Stand	810 lbs (367 kg)
Airflow Information	
5" Exhaust Volume 8" - 336-370 cfm (571-629 m /hr)	
5" Exhaust Volume 9" - 372-415 cfm (632-705 m /hr)	
5" Exhaust Volume 10" - 482-462 cfm (704-785 m /hr)	
5" Canopy (3889202) 8" - 356-470 cfm (605-799 m /hr)	
5" Canopy (3889202) 9" - 398-516 cfm (676-877 m /hr)	
5" Canopy (3889202) 10" - 440-562 cfm (748-955 m /hr)	

Electrical Receptacle & Plug Configuration				
Country	Volts	Amps	Cases	View
North America	115	20	00	
Japan	100	20	20	
North America	230	8	10	
Shuko	230	8	12	
China/Australia	230	8	40	
British (UK)	230	8	50	
India	230	8	70	

Electrical Configuration
115 Volts, 60 Hz, 16 amps
100 Volts, 50/60 Hz, 16 amps
230 Volts, 50/60 Hz, 8 amps

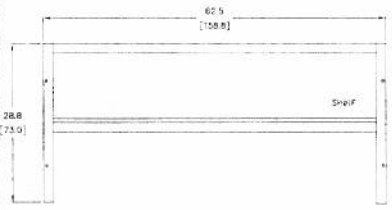

OPTIONAL BASE STAND
TOP VIEW

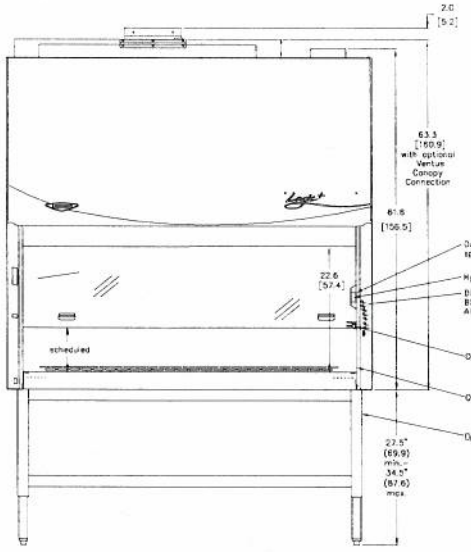

FRONT VIEW

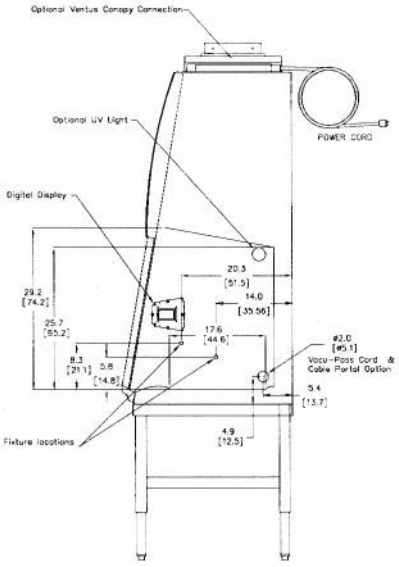

SIDE VIEW

GENERAL DESCRIPTION

5' Logic+ Series Class II, A2 Biological Safety Cabinet
Model: 3025-series

Standard Features

* Nominal inflow velocity of 105 feet per minute (fpm) (0.52 m/s)
* Nominal downflow velocity of 55 feet per minute (fpm) (0.28 m/s)
* Approximately 70% air recirculation
* Intrinsically-safe negative pressure design
* Two 99.99% efficient HEPA filters
* Unitized 16 gauge stainless steel substructure
* Crevice-free, type 304 stainless steel interior and removable, seamless, dished work surface
* Epoxy coated exterior
* 10 degree angled, sliding, fully-closing, counterbalanced, 0.25" tempered safety glass sash with anti-racking mechanism, tactile position indicator, 22.6" (57.4 cm) maximum loading height, and two small sculptured sash handles
* Aerodynamic surfaces surrounding face opening for safe air entry
* Negative pressure channel to keep back of sash clear of contaminants.
* ADA-compliant audible/visual alarm indicator with mute switch
* Two ADA-compliant electrical duplex receptacles with compened, self-closing flush splash covers
* Class 5 conditions per ISO 14644-1 & 2 (formerly Class 100)
* NSF and ETL listed
* Five year warranty on parts and labor
* Interior-mounted, line of sight LCD information center. Color display shows timer, clock, status, date and components icons for at-a-glance monitoring.
* "Filter Life Remaining" bar graph that displays an accurate percent of HEPA filter life remaining
* Status display with specific feedback on alarm conditions such as "sash too high".
* Alerts to warn when the filter life diminishes to 20% or airflow changes indicating an inlet grille or exhaust outlet obstruction.
* Filter monitoring system consisting of an electronically commutated motor (ECM) that is programmed to deliver a precise volume of air as required and automatically adjusts as filters load without relying on airflow sensors.
* Built-in ECM consumes 60% less energy than A/C motor, which allows for cooler and quieter operation, and provides more power for increased HEPA filter loading.
* System that allows the user to program start up and shut down operations such as activation/deactivation of blower, fluorescent and UV lights when the sash is opened or closed.
* Night Set-back System that idles the blower when the sash is fully closed to help maintain a clean, particulate-free environment inside the cabinet during periods of non-use.
* Built-in interval or elapsed timer for UV and fluorescent light control or experiment monitoring.
* Touchpad control on right-hand side post for manual activation of duplexes, blower, light, timer, audible alarm mute and menu selection.
* Supply and exhaust 99.99% efficient HEPA filters. Also available ULPA.
* 29" (73.6 cm) sash opening viewing height for visual accessibility
* Stainless steel liner and removable stamped, one-piece dished work surface with lift knobs.
* Curved stainless steel inlet grille with integral armrest and Secondary Airflow Slots to prevent airflow blockage.
* Bright, 100 foot-candle, glare-free fluorescent lighting located outside the contaminated work area for safe, easy replacement.
* Electronic security lock (optional activation) that requires code to operate the cabinet.
* Color: Glacier White

Units with options may include the following:

* Vacu-Pass Cord & Cable Portal (includes 4 closed-cell neoprene inserts.)
* One service fixture
* Non-welded knock down stand with shelf.
* 254 nm UV lamp with interlocking safety switch.
* Ventus™ Canopy Connection

Units: inches (cm)

SCALE: SCALED TO FIT

Biological Safety Cabinets for:

Labconco Corporation
8811 Prospect Avenue
Kansas City, MO 64132-2696
(800) 821-5525
www.labconco.com

No.	Date

Date: 06-18-2013

Drawing #: 3025-series

Drawn By: L. Dalton

Checked By:

Approved By:

Sheet No: