LBYD, Inc.
Civil and Structural Engineers
716 South 30th Street
Birmingham, AL 35233
Main (205) 251-4500
Fax (205) 324-4181
LBYD
© copyright 2011
These drawings and design intent are the sole property of LBYD, Inc. which may not be reproduced without written permission
PROJECT NO.
101-10-256.001

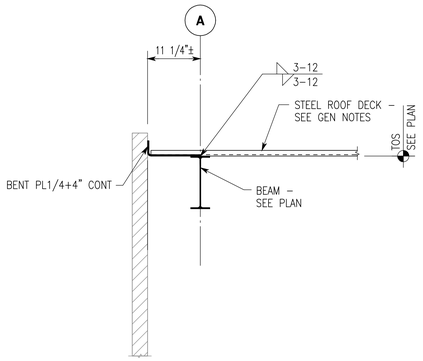

1 Section
S302 3/4"=1'-0"

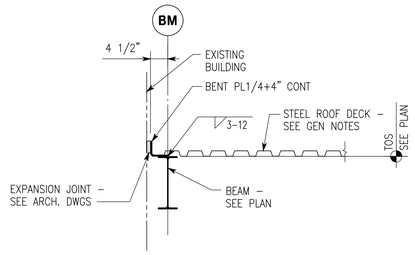

2 Section
S302 3/4"=1'-0"

NOTE:
AT SIM CONDITION, ROOF DECK ORIENTATION TURNED 90°.

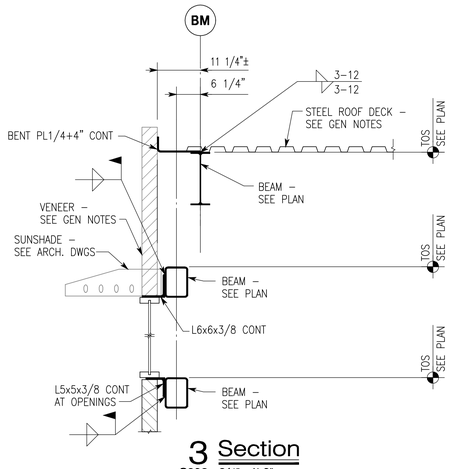

3 Section
S302 3/4"=1'-0"

NOTE:
AT SIM CONDITION, ROOF DECK ORIENTATION TURNED 90°.

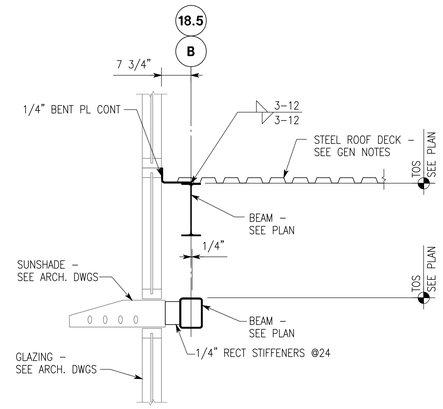

4 Section
S302 3/4"=1'-0"

NOTE:
AT SIM CONDITION, ROOF DECK ORIENTATION TURNED 90°.

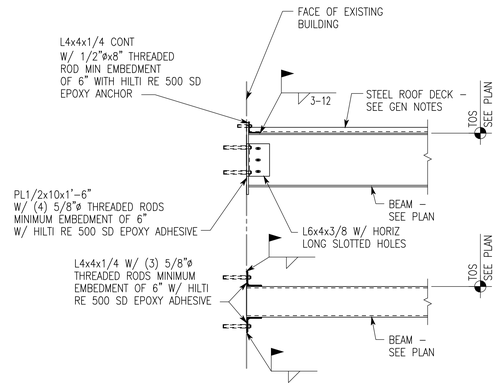

5 Section
S302 3/4"=1'-0"

NOTE:
AT SIM CONDITION, NO LOW STEEL BEAM

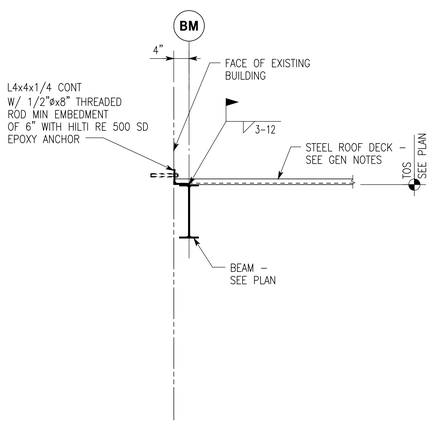

6 Section
S302 3/4"=1'-0"

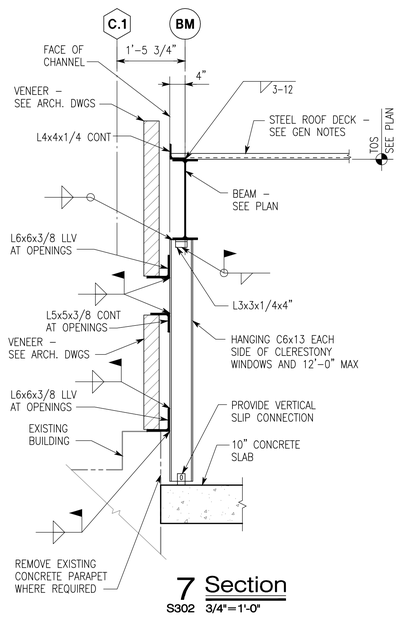

7 Section
S302 3/4"=1'-0"

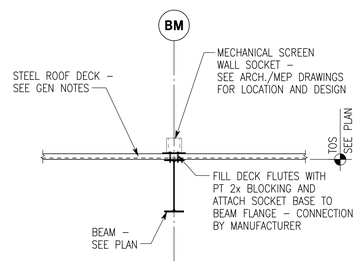

8 Section
S302 3/4"=1'-0"

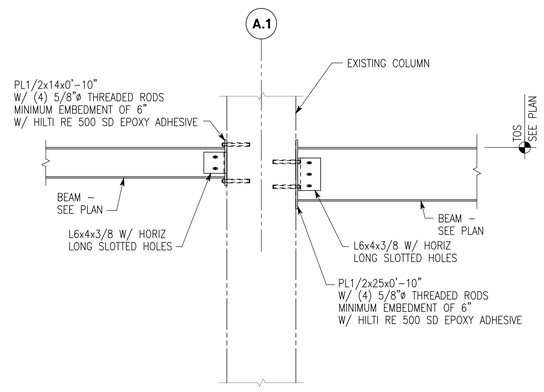

9 Section
S302 3/4"=1'-0"

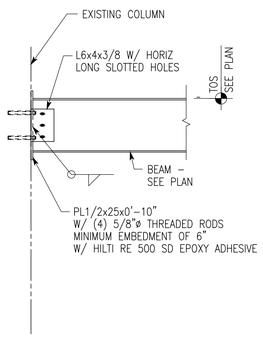

10 Section
S301 3/4"=1'-0"

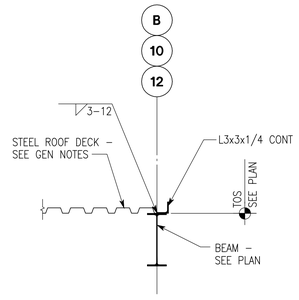

11 Section
S301 3/4"=1'-0"

NOTE:
AT SIM CONDITION, ROOF DECK ORIENTATION TURNED 90°.

CONSTRUCTION DOCUMENTS - 100% FINALS FULLY SPRINKLERED

Revisions:	Date

CONSULTING ENGINEERS:

LBYD, Inc.
Civil and Structural Engineers
716 South 30th Street
Birmingham, AL 35233
Main (205) 251-4500
Fax (205) 324-4181
LBYD © copyright 2012

C·R·S
Engineering & Design Consultants
Birmingham ▪ Huntsville
3504 7th Avenue South
Birmingham, Alabama 35222
205.323.2373
crsegr.com

ALABAMA REGISTERED PROFESSIONAL ENGINEER No. 22239 WARREN G. BISHOP
5/23/14

ARCHITECT:
CMH Architects, Inc.
1800 International Park Drive, Suite 300
Birmingham, AL 35243
(205)969-2696 - TEL
(205)969-3930 - FAX
www.cmharch.com
Copyright © 2011 CMH Architects, Inc.

PROJECT MANAGEMENT:
WALKER AND MOORE INTERIOR DESIGN PROJECT MANAGEMENT
1100 Laurel Lane Montgomery, Alabama 36106 Telephone: 334.380.4399 Facsimile: 334.264.5585

Drawing Title: SECTIONS
Approved Project Director: James Zellander
Project Title: A/E AMBULATORY SURGERY IMPROVEMENTS
Location: VAMC - Birmingham, Alabama
Date: 5/23/2014
Checked: WIN
Drawn: LAP
Project Number: 521-328
Building Number: 0000000000
Drawing Number: S302
Dwg. 10 of 124

Office of Construction and Facilities Management
Department of Veterans Affairs

VA FORM 08-6231

PLOT DATE: 5/19/2014 3:53 PM I:\101-10 JOBS\101-10-256\001\CADD\ACAD\S302.dwg