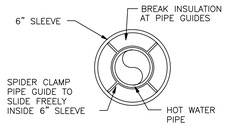

GUIDE IN SLEEVE DETAIL

SCALE: SCALE

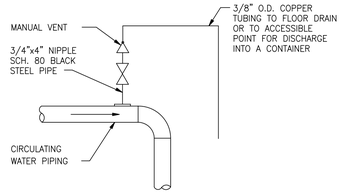

TYPICAL HIGH POINT AIR VENT DETAIL

NO SCALE

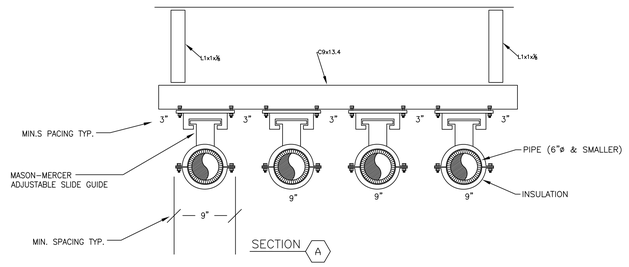

PIPE GUIDE & PIPE SHOE FOR HOT INSULATED LINES

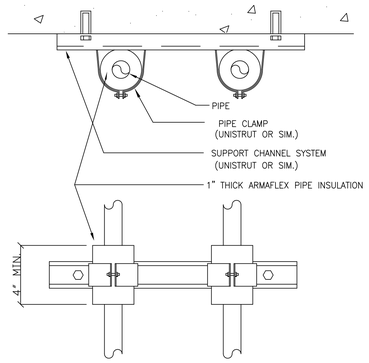

SMALL DIAMETER PIPE ISOLATION DETAIL

NO SCALE (FOR PIPE LESS THAN 2"ø)

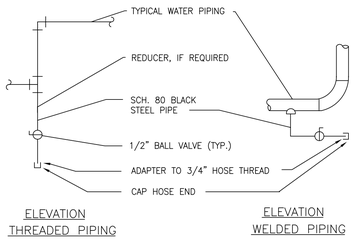

TYPICAL DRAIN VALVE CONNECTION

NO SCALE

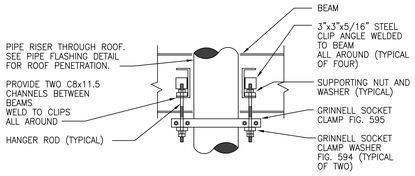

PIPE RISER THRU ROOF SUPPORT

NO SCALE

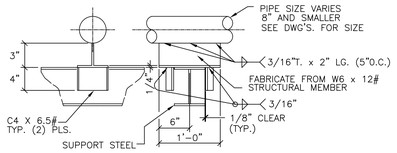

PIPE ANCHOR

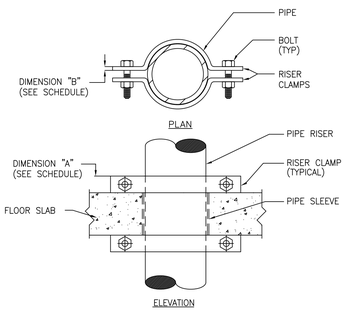

ANCHORS FOR RISERS		
PIPE SIZE	BOLT DIA.	RISER CLAMP DIMENSIONS A x B
1/2" THRU 1"	3/8"	1-1/4" x 3/16"
1-1/4" THRU 3"	3/8"	1-1/4" x 1/4"
4"	1/2"	1-1/2" x 3/16"
5" AND 6"	1/2"	2" x 1/4"

NOTE:

PIPE RISER ANCHORS SHALL BE REQUIRED IN TOP AND BOTTOM OF VERTICAL PIPE RUNS LOCATED IN SHAFT SPACES TO SECURE PIPES IN PLACE.

ANCHORS FOR PIPE RISERS

NO SCALE

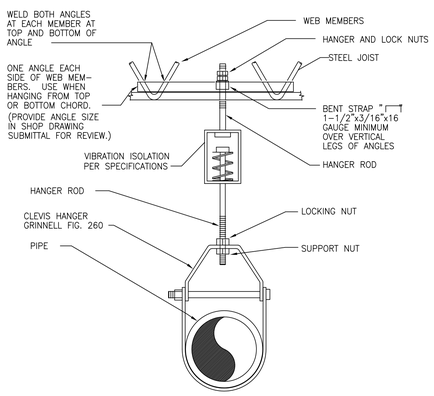

CLEVIS HANGER
(PIPE WITH NO INSULATION)

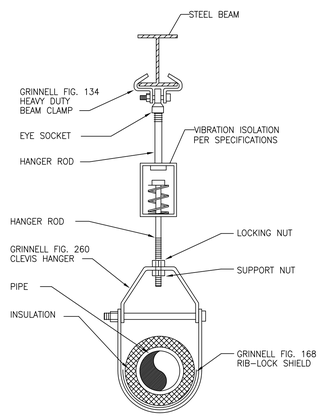

CLEVIS HANGER
(PIPE WITH INSULATION AND THERMAL INSERT AS SPECIFIED).

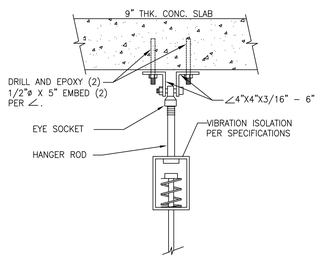

CLEVIS HANGER
(CONC. ATTACHMENT)

PIPE HANGER DETAILS

NO SCALE

SHEET NOTES

1.

SHEET KEYNOTES

1.

FINAL SUBMITTAL
APPROVED FOR CONSTRUCTION

Revisions:	Date

CONSULTANTS:

ENGINEER-OF-RECORD STEPHEN T. STEFFE GA. P.E. NO. 24897

ARCHITECT/ENGINEERS:

AKEA INC.
3603 NW 98th Street, Suite B
Gainesville, FL 32606
Phone: (352) 474-6124
Fax: (352) 474-6324
COA: FL #26693
AKEA Project No. 072-14

Drawing Title: DETAILS

Approved: Project Director

Project Title: NEW SURGICAL 9TH OR SUITE

Location: Atlanta, Georgia

Date: APRIL 30, 2014 | Checked: STS | Drawn: TJM

Project Number: 508-14-105

Building Number:

Drawing Number: M702

19 of 36

Office of Construction and Facilities Management

Department of Veterans Affairs

VA FORM 08-6231