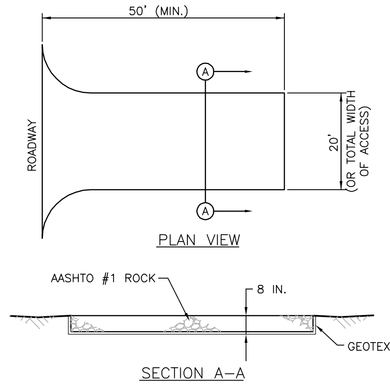

MAINTENANCE:
ROCK CONSTRUCTION ENTRANCE THICKNESS SHALL BE CONSTANTLY MAINTAINED TO THE SPECIFIED DIMENSIONS BY ADDING ROCK. A STOCKPILE SHALL BE MAINTAINED ON SITE FOR THIS PURPOSE. AT THE END OF EACH CONSTRUCTION DAY, ALL SEDIMENT DEPOSITED ON PAVED ROADWAYS SHALL BE REMOVED AND RETURNED TO THE CONSTRUCTION SITE.

(RCE) **ROCK CONSTRUCTION ENTRANCE** (1 / C102)

SCALE: N.T.S.

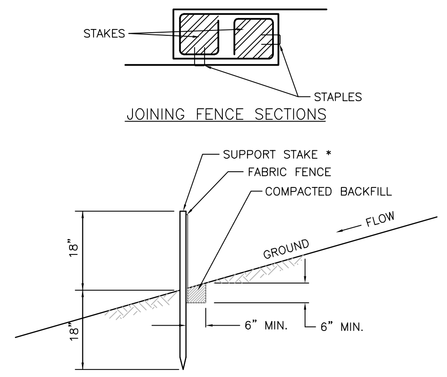

*STAKES SPACED @ 8' MAXIMUM.
USE 2" x 2" WOOD OR EQUIVALENT STEEL STAKES.

FILTER FABRIC FENCE MUST BE PLACED AT LEVEL EXISTING GRADE. BOTH ENDS OF THE BARRIER MUST BE EXTENDED AT LEAST 8 FEET UP SLOPE AT 45 DEGREES TO THE MAIN BARRIER ALIGNMENT.

SEDIMENT MUST BE REMOVED WHEN ACCUMULATIONS REACH 1/2 THE ABOVE GROUND HEIGHT OF THE FENCE.

ANY SECTION OF FILTER FABRIC FENCE WHICH HAS BEEN UNDERMINED OR TOPPED MUST BE IMMEDIATELY REPLACED WITH A ROCK FILTER OUTLET. (SEE ROCK FILTER OUTLET DETAIL)

(FF–18) **STANDARD FILTER FABRIC FENCE (18" HIGH)** (2 / C102)

SCALE: N.T.S.

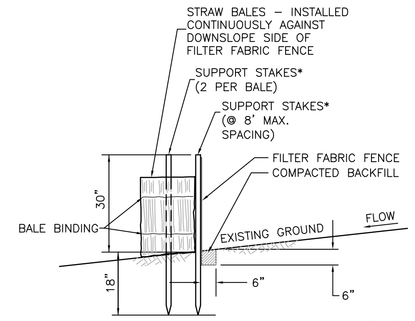

*USE 2" X 2" WOOD OR EQUIVALENT STEEL STAKES.

FILTER FABRIC FENCE MUST BE INSTALLED AT EXISTING LEVEL GRADE. BOTH ENDS OF EACH FENCE SECTION MUST BE EXTENDED AT LEAST 8 FEET UPSLOPE AT 45 DEGREES TO THE MAIN FENCE ALIGNMENT.
SEDIMENT MUST BE REMOVED WHERE ACCUMULATIONS REACH ½ THE ABOVE GROUND HEIGHT OF THE FENCE.
ANY FENCE SECTION WHICH HAS BEEN UNDERMINED OR TOPPED MUST BE IMMEDIATELY REPLACED WITH A ROCK FILTER OUTLET. (SEE ROCK FILTER OUTLET DETAIL)

(FF–30) **FILTER FABRIC FENCE REINFORCED BY STAKED STRAW BALES** (3 / C102)

SCALE: N.T.S.

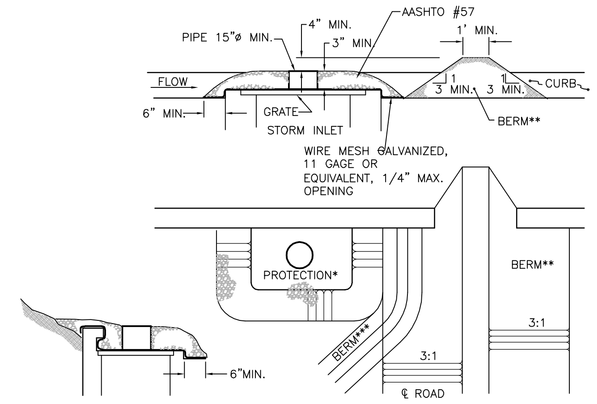

* STONE PROTECTION IS NOT REQUIRED FOR INLET TRIBUTARY TO SEDIMENT BASIN OR TRAP. BERMS ARE REQUIRED FOR ALL INSTALLATIONS.

** EARTHEN BERM SHALL BE MAINTAINED UNTIL ROADWAY IS STONED. ROAD SUBBASE BERM SHALL BE MAINTAINED UNTIL ROADWAY IS PAVED.

*** SIX INCH MINIMUM HEIGHT ASPHALT BERM SHALL BE MAINTAINED UNTIL ROADWAY SURFACE RECEIVES FINAL COAT.

ONE ACRE MAXIMUM DRAINAGE AREA WITH 15" OVERFLOW AND 4" HEAD

(IP) **CURBED ROADWAY STORM INLET PROTECTION AND BERM(S)** (4 / C102)

SCALE: N.T.S.

FILTER BAGS SHALL BE MADE FROM NON-WOVEN GEOTEXTILE MATERIAL SEWN WITH HIGH STRENGTH, DOUBLE STITCHED "J" TYPE SEAMS. THEY SHALL BE CAPABLE OF TRAPPING PARTICLES LARGER THAN 150 MICRONS.

A SUITABLE MEANS OF ACCESSING THE BAG WITH MACHINERY REQUIRED FOR DISPOSAL PURPOSES MUST BE PROVIDED. FILTER BAGS SHALL BE REPLACED WHEN THEY BECOME ½ FULL. SPARE BAGS SHALL BE KEPT AVAILABLE FOR REPLACEMENT OF THOSE THAT HAVE FAILED OR ARE FILLED.

BAGS SHALL BE LOCATED IN WELL-VEGETATED (GRASSY) AREA, AND DISCHARGE ONTO STABLE, EROSION-RESISTANT AREAS. WHERE THIS IS NOT POSSIBLE, A GEOTEXTILE FLOW PATH SHALL BE PROVIDED. BAGS SHALL NOT BE PLACED ON SLOPES GREATER THAN 5%.

THE PUMP DISCHARGE HOSE SHALL BE INSERTED INTO THE BAGS IN THE MANNER SPECIFIED BY THE MANUFACTURER AND SECURELY CLAMPED.

THE PUMPING RATE SHALL BE NO GREATER THAN 750 GPM OR ½ THE MAXIMUM SPECIFIED BY THE MANUFACTURER, WHICHEVER IS LESS. PUMP INTAKES SHOULD BE FLOATING AND SCREENED.

FILTER BAGS SHALL BE INSPECTED DAILY. IF ANY PROBLEM IS DETECTED, PUMPING SHALL CEASE IMMEDIATELY AND NOT RESUME UNTIL THE PROBLEM IS CORRECTED.

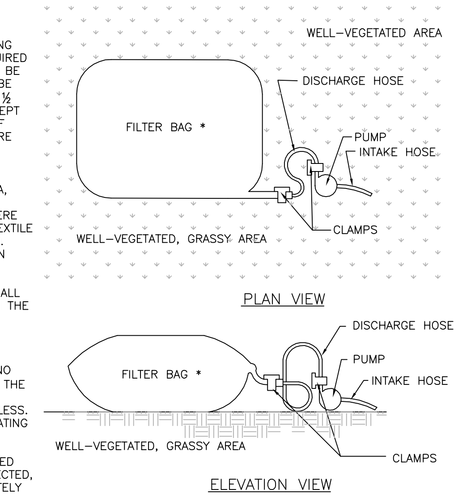

PUMPED WATER FILTER BAG (5 / C102)

SCALE: N.T.S.

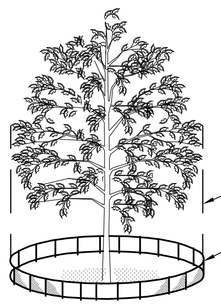

NOTES:
1. FENCING SHALL BE INSTALLED AT 5' OUTSIDE THE DRIPLINE OR 20' FROM THE TRUNK, WHICHEVER IS GREATER.
2. BOARDS SHALL NOT BE NAILED TO TREES DURING CONSTRUCTION.
3. FEEDER ROOTS SHALL NOT BE CUT IN AREA INSIDE THE DRIP LINE.
4. THE CONTRACTOR SHALL NOT ENCROACH ONTO AREAS DELINEATED AS TREE PROTECTION. THE STORAGE OF EQUIPMENT OR MATERIALS IN THIS AREA IS STRICTLY FORBIDDEN. THE SILT FENCE ERECTED AT THE TREE PROTECTION LINE SHALL BE MAINTAINED AT ALL TIMES DURING THE CONSTRUCTION PROCESS AND SHALL NOT BE CROSSED.
5. REFER TO PLAN SHEETS FOR LOCATION OF WOODS AND TREES TO REMAIN. ALL TREES TO REMAIN WHICH ARE ADJACENT TO CONSTRUCTION AREAS SHALL BE PROTECTED IN ACCORDANCE WITH THIS DETAIL.
6. NO CLEARING, EARTHMOVING, OR CONSTRUCTION SHALL COMMENCE PRIOR TO INSTALLATION OF TREE PROTECTION FENCES AROUND ALL EXISTING TREES.
7. A 48 INCH HIGH WOODEN OR CHAIN LINK FENCE WITH POSTS ON 8 FOOT CENTER TO CENTER (MAXIMUM) SHALL BE INSTALLED AROUND EACH EXISTING TREE PRIOR TO START OF CONSTRUCTION (TYPICAL FOR ALL TREES).

TREE PROTECTION FENCE DETAIL (6 / C102)

SCALE: N.T.S.

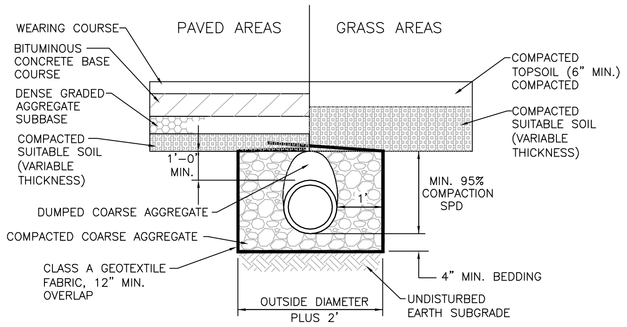

NOTES:
1. PLACE COARSE AGGREGATE MATERIAL (#57 STONE) IN 4" LIFTS ADJACENT TO THE LOWER HAUNCHES & TO A HEIGHT OF 1' ABOVE TOP OF PIPE. COMPACT TO 95% SPD. TEST THE BACKFILL MATERIAL AND CONTINUE BACKFILL IN ACCORDANCE WITH PUBLICATION 408, SECTION 601.
2. FOR TRENCH BOX / SHORING INSTALLATION REQUIREMENTS REFER TO PUBLICATION 408, SECTION 601.
3. PLACEMENT OF BACKFILL MATERIAL IN 8 INCH LAYERS (LIFTS) SHALL BE PERMITTED WHEN USING VIBRATORY COMPACTION EQUIPMENT.
4. REFER TO TYPICAL PAVEMENT SECTION FOR MATERIAL THICKNESS (PAVED AREAS)

PERFORATED PIPE TRENCH DETAIL (7 / C102)

SCALE: N.T.S.

REFER TO PENNDOT RC–30M, LATEST EDITION

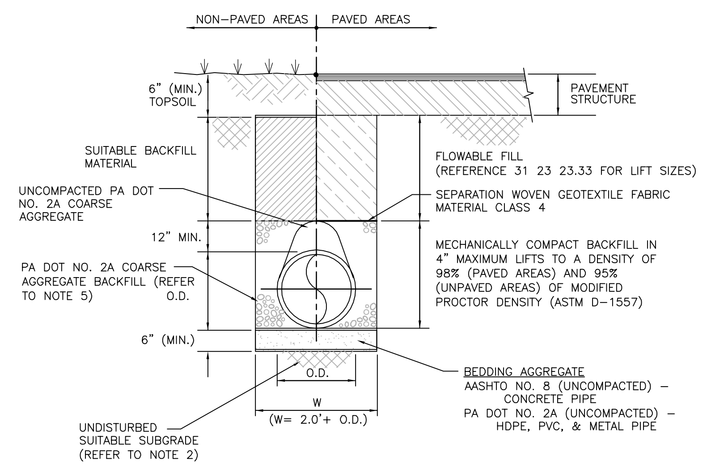

NOTES:
1. EXCAVATE TRENCH BOX AND INSTALL SHORING AS REQUIRED TO COMPLY WITH FEDERAL, STATE, AND LOCAL LAWS AND CODES.
2. IF UNSUITABLE MATERIAL IS FOUND, UNDERCUT AS DIRECTED BY THE ENGINEER AND BACKFILL WITH SUITABLE MATERIAL TO BOTTOM OF BEDDING ELEVATION.
3. KEEP EXCAVATINGS DRY AND FREE OF WATER. INTERCEPT AND DIVERT SURFACE DRAINAGE AWAY FROM EXCAVATIONS. DEWATER ANY PRECIPITATION AND SUBSURFACE WATER FROM EXCAVATIONS.
4. DO NOT ADVANCE TRENCHING OPERATIONS MORE THAN 200 FEET AHEAD OF COMPLETED PIPELINE.
5. ALL TRENCHES WITHIN PAVED AREAS SHALL BE BACKFILLED WITH FLOWABLE FILL FROM BOTTOM OF PAVEMENT BASE TO WITHIN A MINIMUM OF 12" TO TOP OF THE PIPE..

TYPICAL STORM PIPE TRENCH + BACKFILL (8 / C102)

SCALE: N.T.S.

PRECAST MANHOLES, MEETING THE REQUIREMENTS OF PUBLICATION 408, SECTION 713.2 (c), MAY BE SUBSTITUTED FOR TYPES A AND B MANHOLES.

PROVIDE WELDED WIRE FABRIC MEETING THE REQUIREMENTS OF PUBLICATION 408, SECTION 709.3.

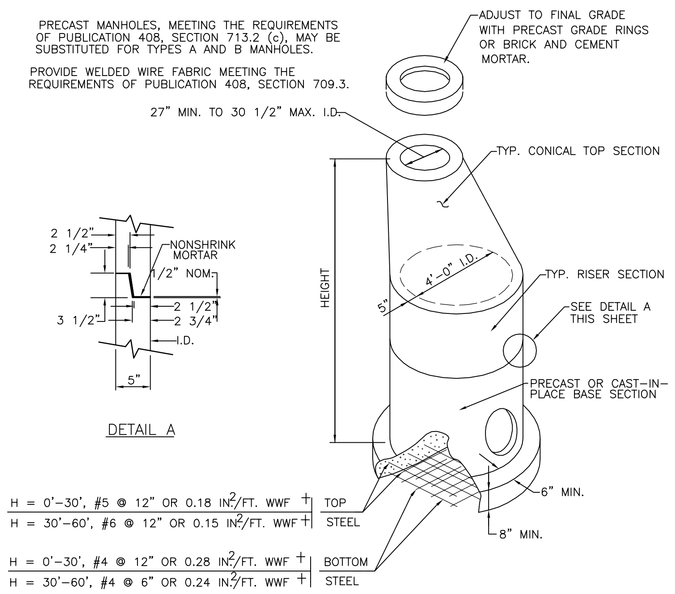

STORM SEWER MANHOLE (9 / C102)

SCALE: N.T.S.

REFER TO PENNDOT RC–39M, LATEST EDITION

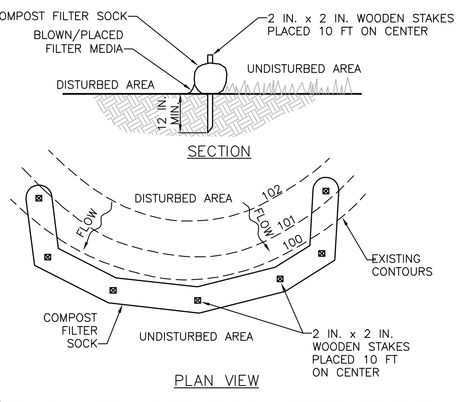

NOTES:
SOCK FABRIC SHALL MEET STANDARDS OF TABLE 4.1 OF THE PA DEP EROSION CONTROL MANUAL. COMPOST SHALL MEET THE STANDARDS OF TABLE 4.2 OF THE PA DEP EROSION CONTROL MANUAL.
COMPOST FILTER SOCK SHALL BE PLACED AT EXISTING LEVEL GRADE. BOTH ENDS OF THE BARRIER SHALL BE EXTENDED AT LEAST 8 FEET UP SLOPE AT 45 DEGREES TO THE MAIN BARRIER ALIGNMENT. MAXIMUM SLOPE LENGTH ABOVE ANY BARRIER SHALL NOT EXCEED THAT SPECIFIED FOR THE SIZE OF THE SOCK AND THE SLOPE OF ITS TRIBUTARY AREA.
TRAFFIC SHALL NOT BE PERMITTED TO CROSS COMPOST FILTER SOCKS.
ACCUMULATED SEDIMENT SHALL BE REMOVED WHEN IT REACHES 1/2 THE ABOVE GROUND HEIGHT OF THE BARRIER AND DISPOSED IN THE MANNER DESCRIBED ELSEWHERE IN THE PLAN.
COMPOST FILTER SOCKS SHALL BE INSPECTED WEEKLY AND AFTER EACH RUNOFF EVENT. DAMAGED SOCKS SHALL BE REPAIRED ACCORDING TO MANUFACTURER'S SPECIFICATIONS OR REPLACED WITHIN 24 HOURS OF INSPECTION.
BIODEGRADABLE COMPOST FILTER SOCKS SHALL BE REPLACED AFTER 6 MONTHS; PHOTODEGRADABLE SOCKS AFTER 1 YEAR. POLYPROPYLENE SOCKS SHALL BE REPLACED ACCORDING TO MANUFACTURER'S RECOMMENDATIONS.
UPON STABILIZATION OF THE AREA TRIBUTARY TO THE SOCK, STAKES SHALL BE REMOVED. THE SOCK MAY BE LEFT IN PLACE AND VEGETATED OR REMOVED. IN THE LATTER CASE, THE MESH SHALL BE CUT OPEN AND THE MULCH SPREAD AS A SOIL SUPPLEMENT.

STANDARD CONSTRUCTION DETAIL COMPOST FILTER SOCK (10 / C102)

SCALE: N.T.S.

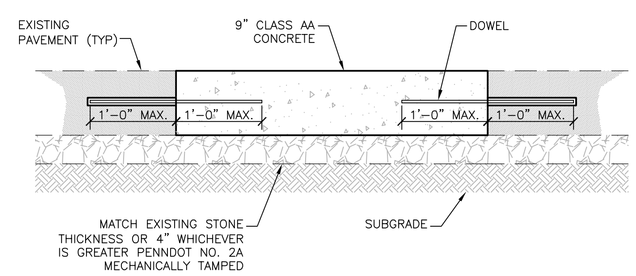

CONCRETE PAVEMENT DETAIL (11 / C102)

SCALE: N.T.S.

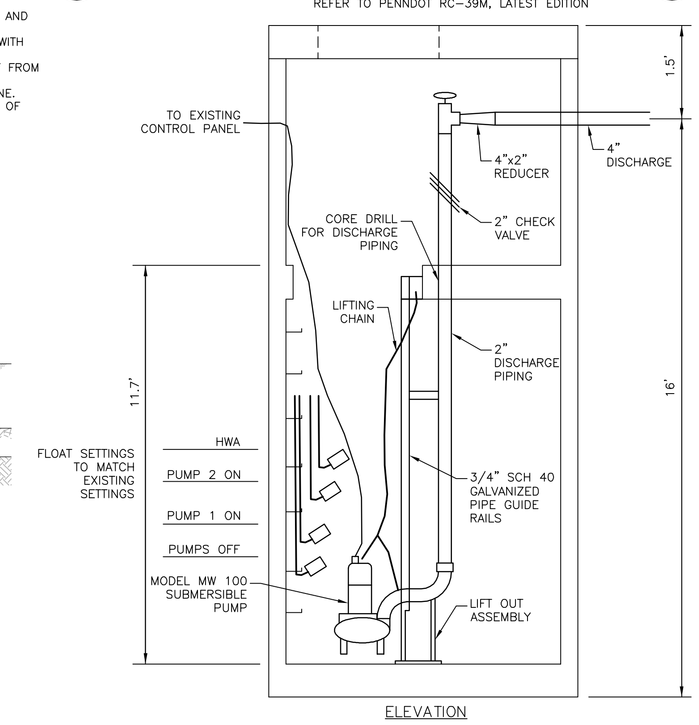

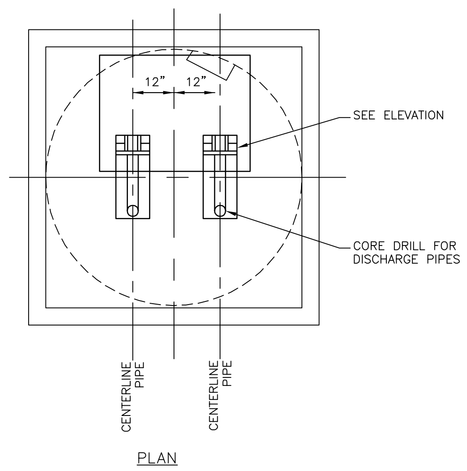

PUMP DETAIL (12 / C102)

SCALE: N.T.S.

Revisions:	Date

CONSULTANTS:

GEOTECHNICAL CONSULTANT:
ADVANTAGE ENGINEERS
980 Century Drive
Mechanicsburg, PA 17055
Office: (717) 458-0850
Fax: (717) 458-0858
www.advantageengineers.com

ENGINEERS:
BARRY ISETT & ASSOCIATES, INC.
Multidiscipline Engineers & Consultants
Allentown, PA 610.398.0904
Valley Forge, PA 610.935.2175
Berlin, MD 410.629.0883
Hazleton, PA 570.455.2999
Phillipsburg, NJ 908.454.9500
www.barryisett.com
BIA# 1045612.000

Drawing Title: DETAILS

Project Title: REPAIR STRUCTURAL TUNNEL JOINTS

Location: COATESVILLE PA

Date: 07/17/2013 | Checked: REK / RKF | Drawn: RPK

Project Number: 542-13-104

Building Number: 9 - 38 - 59

Drawing Number: C102

Dwg.17 of 31

Office of Construction and Facilities Management
Department of Veterans Affairs

VA FORM 08-6231

\\Bdscas.com\work\Land_Serv\VFDRO\Projects\2012\1045612_VAMC_TUNNELS\dwg\1045612Cwd.dwg 7-15-13 10:50:01 AM rkescher