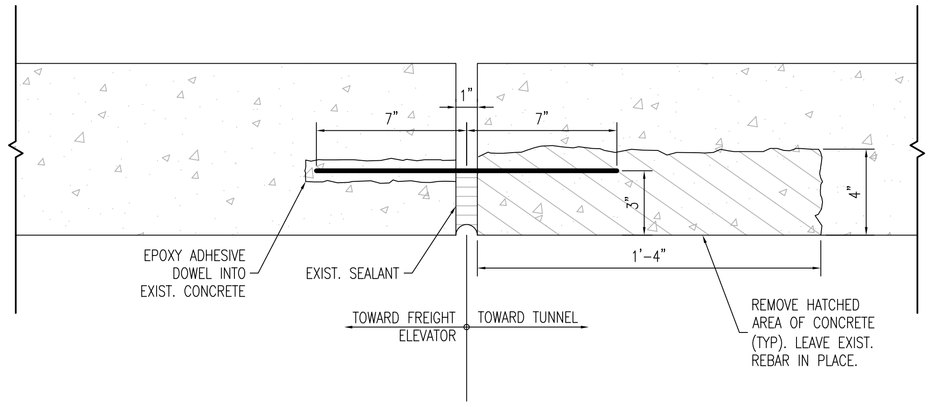

CEILING EXPANSION JOINT DOWEL DETAIL AT BLDG 9

1 / SS201

SCALE: 3"=1'-0"

NOTE:
1. REMOVE 16 INCHES OF CONCRETE ON ONE SIDE OF TUNNEL CEILING (EXPOSING EXISTING REBAR) TO INSTALL NEW ½" GREASED SMOOTH DOWEL, ORIENTATED PER PLAN. REMOVE CONCRETE UNTIL ADEQUATE REBAR IS FOUND. REPLACE DAMAGED REBAR AND DOWEL INTO CONC AS REQUIRED PER ENGINEER'S DISCRETION.
2. REMOVE ANY LOOSE OR DETERIORATED CONCRETE AND REPAIR EXPANSION JOINT PER CONCRETE REPAIR DETAIL 3/SS101. FOR INSTALLATION OF NEW EXPANSION JOINT HARDWARE SEE DETAIL 2/SS501.

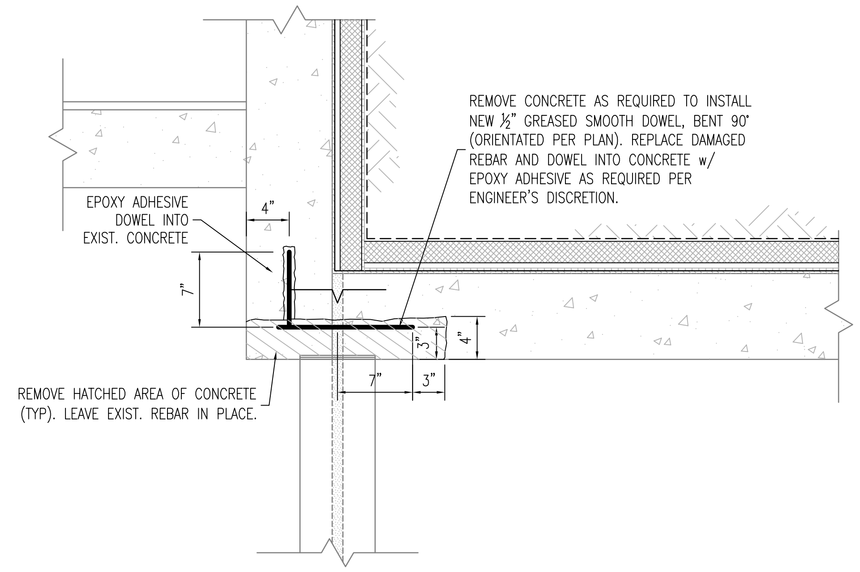

CEILING EXPANSION JOINT DOWEL DETAIL AT BLDG 9

2 / SS201

SCALE: 1-1/2"=1'-0"

NOTES:
1. REMOVE ANY LOOSE OR DETERIORATED CONCRETE AND REPAIR EXPANSION JOINT PER CONCRETE REPAIR DETAIL 3/SS101. FOR INSTALLATION OF NEW EXPANSION JOINT HARDWARE SEE DETAIL 2/SS501.

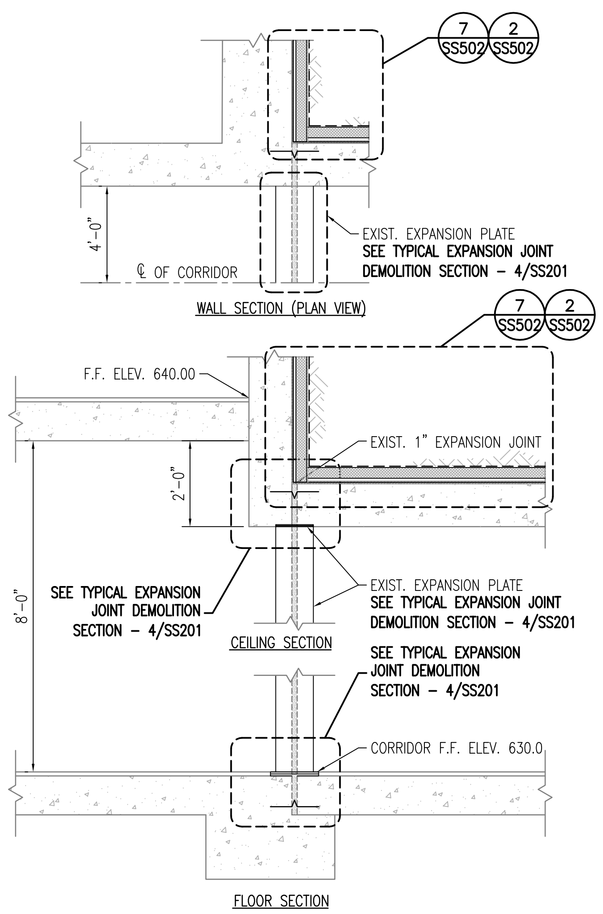

EXISTING EXPANSION JOINT SECTION AT BLDG 9

3 / SS201

SCALE: N.T.S.

NOTE:
1. REMOVE FLOOR TILES, WALL PLATES, AND CEILING PLATES, REPAIR CONCRETE PER 3/SS101. FOR INSTALLATION OF NEW EXPANSION JOINT HARDWARE SEE DETAILS 1/SS501 AND 2/SS501.

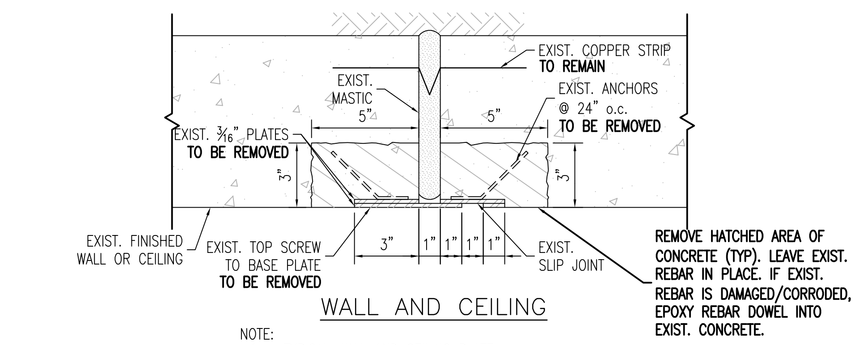

WALL AND CEILING

NOTE:
1. TYPICAL WALL AND CEILING PLATE.
2. REMOVE EXISTING HARDWARE AND CONCRETE. SEE CONCRETE REPAIR DETAIL 3/SS101. SEE DETAIL 2/SS501 FOR PREP AND INSTALLATION OF NEW EXPANSION JOINT HARDWARE.

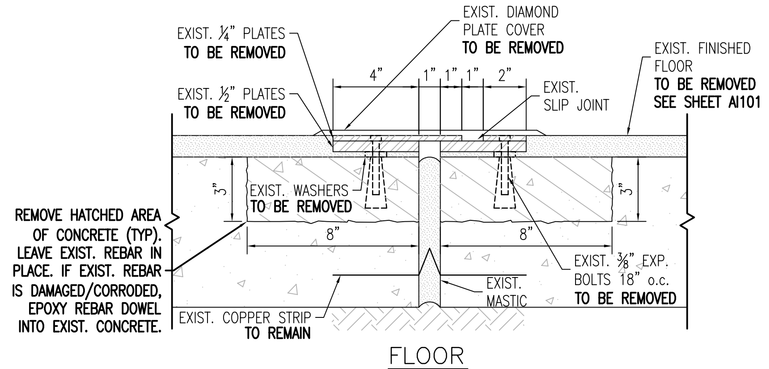

FLOOR

NOTE:
1. TYPICAL FLOOR PLATE.
2. REMOVE EXISTING HARDWARE AND CONCRETE. SEE CONCRETE REPAIR DETAIL 3/SS101. SEE DETAIL 1/SS501 FOR PREP AND INSTALLATION OF NEW EXPANSION JOINT HARDWARE.

TYPICAL EXPANSION JOINT DEMOLITION SECTION

4 / SS201

SCALE: 3"=1'-0"

NOTE:
1. FOR NEW EXPANSION JOINT HARDWARE SEE DETAILS 1/SS501 AND 2/SS501.
2. SEE ELECTRICAL DRAWINGS FOR PROTECTION REQUIREMENTS FOR EXISTING UTILITIES AT EXPANSION JOINTS DURING WORK.

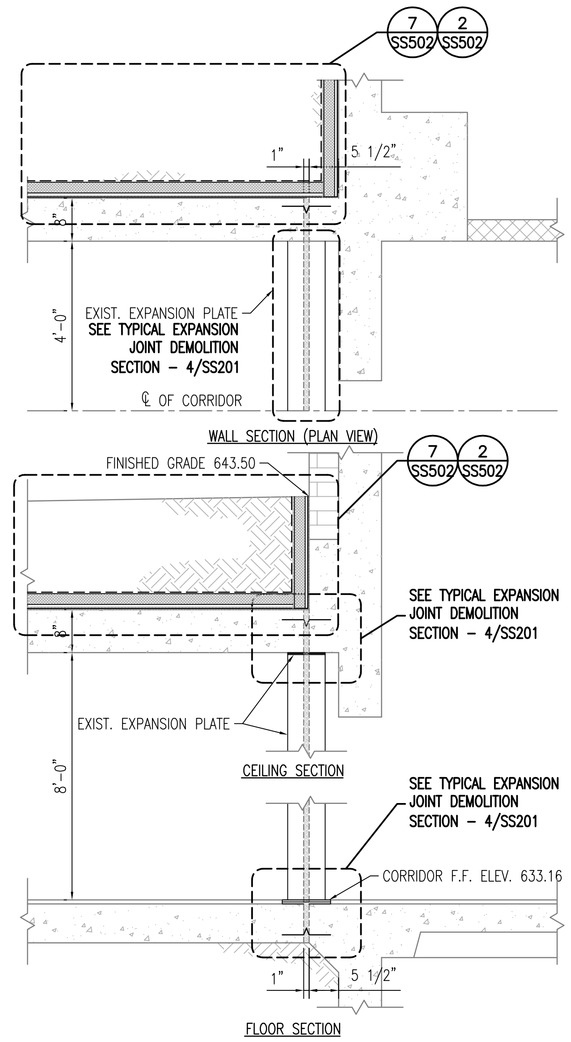

EXISTING EXPANSION JOINT SECTION AT BLDG 38

5 / SS201

SCALE: N.T.S.

NOTE:
1. REMOVE FLOOR TILES, WALL PLATES, AND CEILING PLATES, REPAIR CONCRETE PER 3/SS101. FOR INSTALLATION OF NEW EXPANSION JOINT HARDWARE SEE DETAILS 1/SS501 AND 2/SS501.

CONTRACTOR SHALL VERIFY ALL CONDITIONS AND DIMENSIONS FOR THE ENTIRE PROJECT BEFORE PROCEEDING WITH THE WORK.

Revisions:	Date

CONSULTANTS:

GEOTECHNICAL CONSULTANT:

ADVANTAGE ENGINEERS
910 Century Drive
Mechanicsburg, PA 17055
Office (717) 409-0800
Fax (717) 409-0801
www.advantageengineers.com

ENGINEERS:

BARRY ISETT & ASSOCIATES, INC.
Multidiscipline Engineers & Consultants

Allentown, PA	610.398.0904	Hazleton, PA	570.455.2999
Valley Forge, PA	610.935.2175	Phillipsburg, NJ	908.454.9500
Berlin, MD	410.629.0883		

www.barryisett.com

BIA# 1045612.000

Drawing Title
CONNECTING CORRIDOR SECTIONS AND REPAIR DETAILS - BLDG 9-38

Project Title
REPAIR STRUTURAL TUNNEL JOINTS

Project Number 542-13-104

Building Number 9 - 38 - 59

Location COATESVILLE PA

Date 07/17/2013 | Checked REK / RKF | Drawn RPK

Drawing Number SS201

Dwg. 22 of 31

Office of Construction and Facilities Management

Department of Veterans Affairs

VA FORM 08-6231