DEMOLITION NOTES:

1. The contractor shall use this drawings as a general guide and provide demolition as shown as well as components not necessarily shown but are required for a complete job.

2. The Contractor shall furnish equipment, labor and removal of debris from the site.

3. Contractor will be permitted to use his own methods of removal of wall sections, being careful not to damage the building or weaken it.

4. Consult with Architect if any special problem starts to develop.

5 Take care not to damage existing work. Any such careless damage shall be repaired at Contractor's expense.

6. Care shall be taken to protect the public during the demolition procedures.

7. All debris shall be removed from the site to an approved dumping location.

8. When removing walls, seal off the rest of the building with temporary means, taping joints to keep dust from those parts as much as practically possible.

9. After construction of Alterations. All remaining existing surfaces disturbed during demolition and/or construction shall be patched and refinished to match the adjacent existing finish.

10. Remove any electrical devices and wiring in areas of demolition.

11. Remove any plumbing fixtures and piping in areas of demolition.

12. The homeowner may want to keep some items removed as part of the demolition work. Coordinate with the home owner before starting demolition work.

STRUCTURAL NOTES:

1. Contractors involved in constructing walls, roof or related parts shall be responsible for lateral support during construction.

2. Loading:

Ground Snow load	25 PSF
Deck Floor live load	60 PSF
Deck Floor dead load	10 PSF
Total deck floor load	70 PSF

Wind load 90 mph, 15 PSF on walls – Exposure 'B'
Maximum allowable live load deflection L/360

3. All lumber shall be minimum SPF or HEM-FIR no.1/no.2 unless indicated otherwise.

4. All wood in contact with concrete or masonry shall be cca pressure treated so. pine.

5. All fasteners in contact with pressure treated lumber shall be galvanized.

KEYED NOTES TO DEMOLITION PLAN

1	REMOVE EXISTING BATH TUB AND SURROUND. REMOVE ANY SUPPLY LINES, DRAINS AND VENTS NOT NEEDED FOR INSTALLATION OF NEW CLOTHES WASHER AND DRYER. SEE FLOOR PLAN.
2	REMOVE EXISTING DOOR, HARWARE SND FRAME. ENLARGE OPENING FOR NEW DOOR. SEE FLOOR PLAN. RELOCATE ANY ELECTRICAL EQUIPMENT AS NECESSARY FOR NEW OPENING
3	REMOVE EXISTING LAVATORY AND VANITY CABINET. REMOVE ANY SUPPLY, WASTE AND VENTS NOT NEEDED FOR NEW LAVATORY IN NEW LOCATION.
4	REMOVE EXISTING CLOSET WALLS DOORS AND ANY INTERIOR CLOSET ACCESSORIES.
5	REMOVE ALL EXISTING CERAMIC WALL TILE.
6	REMOVE EXISTING WINDOW.
7	REMOVE ALL EXISTING KITCHEN AND LAUNDRY APPLIANCES. APPLIANCES TO BE RE-INSTALLED IN NEW LOCATIONS. SEE FLOOR PLAN
8	REMOVE EXISTING HOSE BIBB. REMOVE ANY SUPPLY PIPING NOT NEEDE FOR NE LOCATION. SEE FLOOR PLAN.
9	REMOVE KITCHEN CABINETS, TOPS AND KITCHEN SINK. REMOVE SUUPLY LINES, WATES AND VENTS.
10	REMOVE EXISTING KITCHEN CABINETS, TOPS AND KITCHEN SINK. REMOVE SUUPLY LINES, WATES AND VENTS.
11	REMOVE EXISTING WATER HEATER, SUPPLY LINES AND FLUE. RETURN TO OWNER.
12	REMOVE PORTION OF EXISTING WALL FOR NEW OPENING. SEE FLOOR PLAN
13	REMOVE EXISTING WATER METER AND SAVE FOR RE-LOCATION. COORIDINATE WITH LOCAL WATER DEPARTMENT.
14	REMOVE EXISTING ELECTRICAL SERVICE PANEL AND ANY CIRCUIT WIRING NOT TO REMAIN. COORDINATE WITH LOCAL ELECTRIC SUPPLIER.
15	REMOVE EXISTING FORCED AIR FURNACE AND RETURN TO OWNEER. REMOVE ANY DUCTWORK NOT TO BE REUSED IN NEW DUCT LAYOUT. REMOVE AND GAS PIPING AND ELECTRICAL FEEDS.
16	REMOVE EXISTING STUD WALLS AS SHOWN ON DEMOLITION PLAN
17	REMOVE EXISTING CONCRETE STOOP AND MASONRY STEPS.
18	REMOVE EXISTING CONCRETE SLAB PATION AND BASE. EXCAVATE FOR NEW PATIO AT ELEVATION SHOWN ON FLOOR PLAN.
19	REMOVE EXISTING PORTABLE METAL RAMP. RETURN TO OWNER.
20	REMOVE PORTION OF CONCRETE SLAB PATIO IN AREA OF STEPS. SEE PLAN AND DETAILS.
21	REMOVE EXISTING CABINET AND RETURN TO OWNER. REMOVE ALL WALLPARER IN BATHROOM.

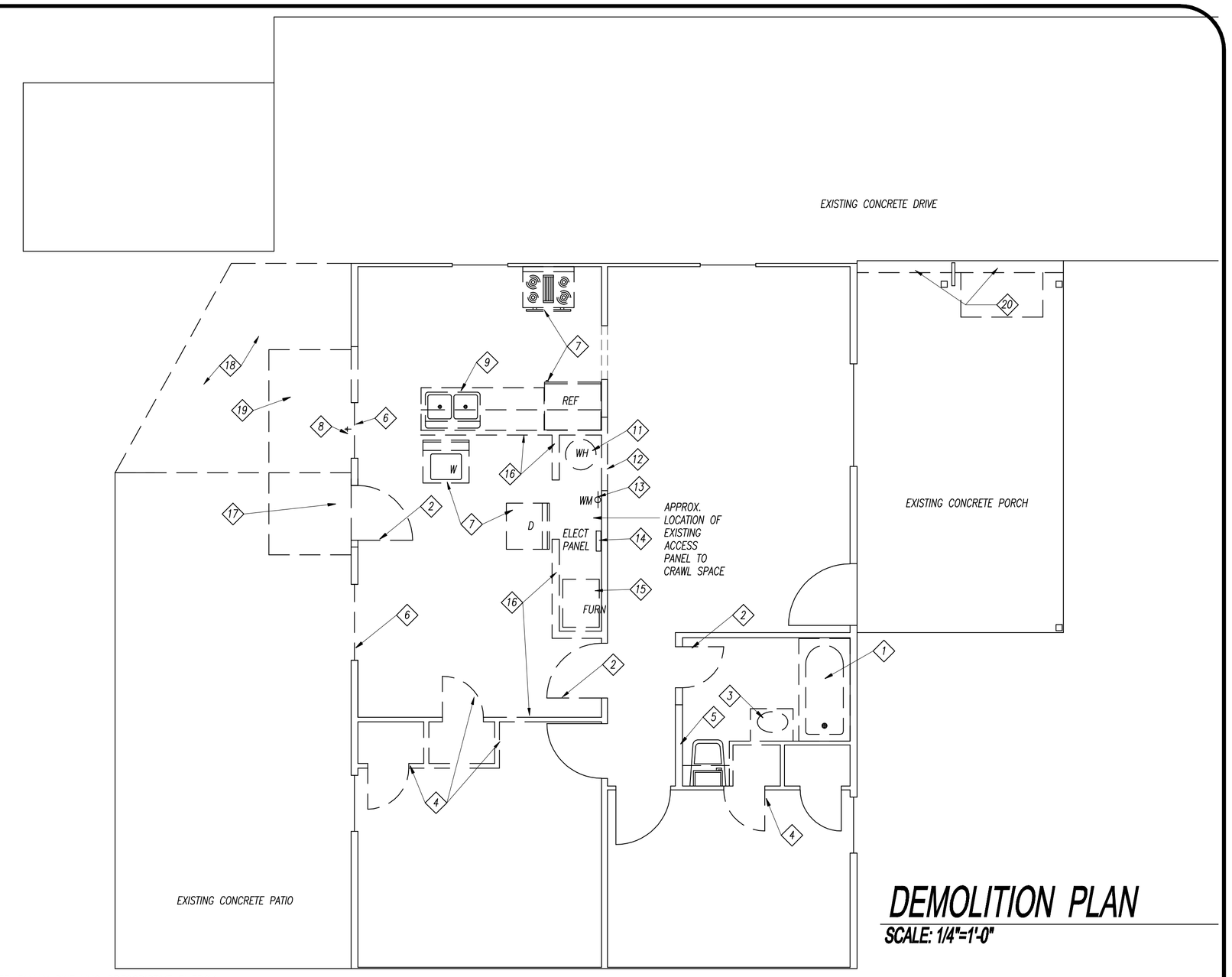

DEMOLITION PLAN

SCALE: 1/4"=1'-0"

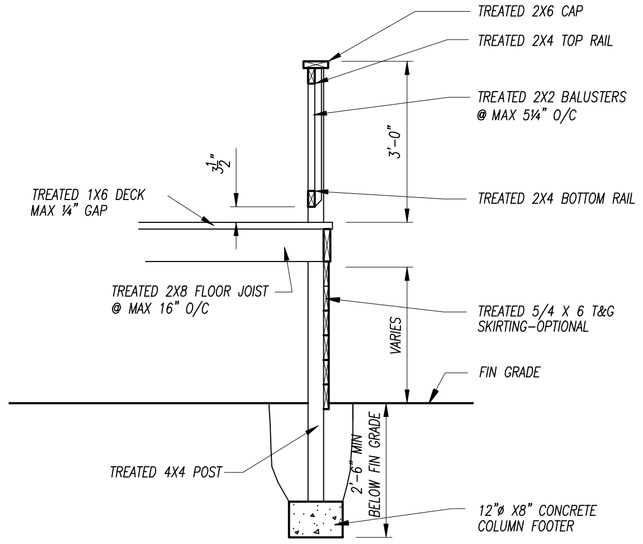

DECK RAILING DETAIL

SCALE: 1/2"=1'-0"

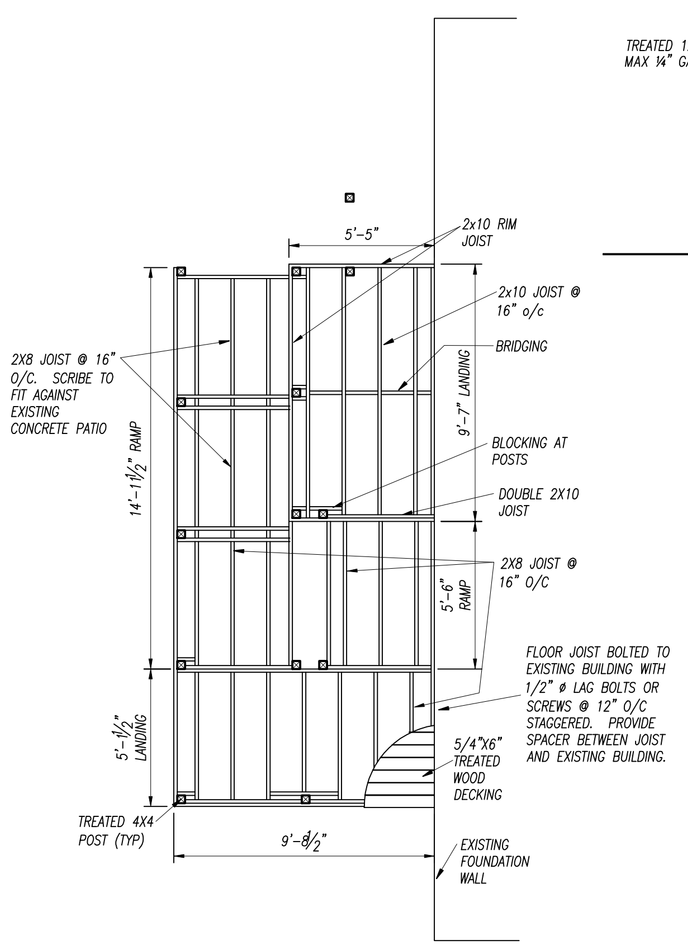

FLOOR FRAMING PLAN

SCALE: 1/4"=1'-0"

RESIDENTIAL CODE OF OHIO
CHAPTER 11 ENERGY EFFICIENCY
SECTION 1104 OHIO RESIDENTIAL ONE-, TWO-, AND THREE-FAMILY DWELLING PRESCRIPTIVE ENERGY REQUIREMENTS
ZONE B PER TABLE 2

THERMAL ENVELOPE	REQUIREMENTS PER TABLE	DESIGN
ATTIC INSULATION	R-38	R-38
WALLS	R-13	R-13 CAVITY
FLOORS	R-19	R-19
BAND BOARD/BAND JOIST/RIM JOIST	R-19	R-19
CONDITIONED BASEMENT WALLS	R-5	R-5
SLAB PERIMETER ABOVE FROST LINE	R-10	N/A
GLAZING	U-0.35 (0.60 SKYLIGHTS)	U-0.31
EXTERIOR DOORS	U-0.57	U-0.50
DUCTWORK	R-6	R-6 MIN
MAXIMUM WINDOW TO WALL AREA RATIO	21%	11.5%
HVAC EFFICIENCIES		
FURNACE	90%	93 %
AIR CONDITIONING (SEER)	13	14

AIR INFILTRATION REQUIREMENTS---NEW WORK
OVERALL AIR AND THERMAL BARRIER ALIGNMENT
-INSULATION SHALL BE INSTALLED IN FULL CONTACT WITH SEALED INTERIOR AND EXTERIOR AIR BARRIER
A. OVERALL ALIGNMENT THROUGHOUT DWELLING GAPS OR COMPRESSION
B. GARAGE BAND JOIST AIR BARRIER ADJOINING CONDITIONED SPACE
C. ATTIC EAVE BAFFLES
D. SLAB-EDGE INSULATION

WALLS ADJOINING EXTERIOR WALLS OR UNCONDITIONED SPACE
-FULLY INSULATED WALLS ALIGN WITH AIR BARRIER AT INTERIOR AND EXTERIOR; CONTINUOUS TOP AND BOTTOM PLATES OR SEALED BLOCKING
A. WALL BEHIND SHOWER/TUB
B. WALL BEHIND FURNACE
C. INSULATED ATTIC SLOPES FOR UNVENTED ATTIC SPACES
D. ATTIC KNEE WALLS
E. SKYLIGHT SHAFT WALLS
F. WALLS ADJOINING PORCH ROOFS
G. STAIRCASE WALLS
H. DOUBLE WALLS

FLOORS BETWEEN CONDITIONED AND UNCONDITIONED SPACES
-AIR BARRIER INSTALLED AT ANY EXPOSED INSULATION EDGES; INSULATION INSTALLED TO MAINTAIN PERMANENT CONTACT WITH SUB-FLOOR ABOVE AND AIR BARRIER BELOW
A. INSULATED FLOOR ABOVE GARAGE
B. INSULATED CANTILEVERED FLOOR

SHAFTS
-OPENINGS TO UNCONDITIONED SPACE FULLY SEALED WITH SOLID BLOCKING OR FLASHING AND GAPS ARE FULLY SEALED WITH CAULKING OR FOAM (FIRE RATED COLLARS AND CAULKING WHERE REQUIRED)
A. DUCT SHAFTS AND PENETRATIONS
B. PIPING SHAFTS AND PENETRATIONS
C. FLUE SHAFTS

ATTIC/CEILING INTERFACE
-ALL ATTIC PENETRATIONS AND DROPPED CEILINGS INCLUDE FULL INTERIOR AIR BARRIER ALIGNED WITH INSULATION;GAPS FULLY SEALED WITH CAULKING OR FOAM; MOVEABLE INSULATION FITS SNUGLY IN OPENING AND AIR BARRIERS FULLY GASKETED
A. ATTIC ACCESS PANEL FULLY GASKETED AND INSULATED
B. ATTIC DROP-DOWN STAIRS FULLY GASKETED AND INSULATED
C.. DROPPED CEILING/SOFFIT-AIR BARRIER ALIGNED WITH INSULATION
D. RECESSED LIGHTING FIXTURES IC-AT (INSULATION CONTACT-AIR TIGHT) LABELED AND SEALED TO DRYWALL
E. WHOLE-HOUSE FAN INSULATED COVER GASKETED TO THE OPENING

DRAWING INDEX	
A1	DEMO PLAN & NOTES FOUNDATION PLAN & NOTES FLOOR FRAMING PLAN , DECK RAILING DETAIL STRUCTURAL NOTES
A2	FLOOR PLAN AND NOTES INTERIOR AND EXTERIOR ELEVATIONS STAIR DETAIL
P1	PLUMBING PLAN, NOTES, & DETAILS
P2	PLUMBING SPECIFICATIONS, SCHEDULES, ISOMETRIC
M1	HVAC PLAN, NOTES, SPECIFICATIONS
M2	HVAC SPECIFICATIONS, NOTES, DETAILS
E1	ELECTRIC PLANS AND NOTES
E2	ELECTRIC SPECS, SCHEDULES, RISER

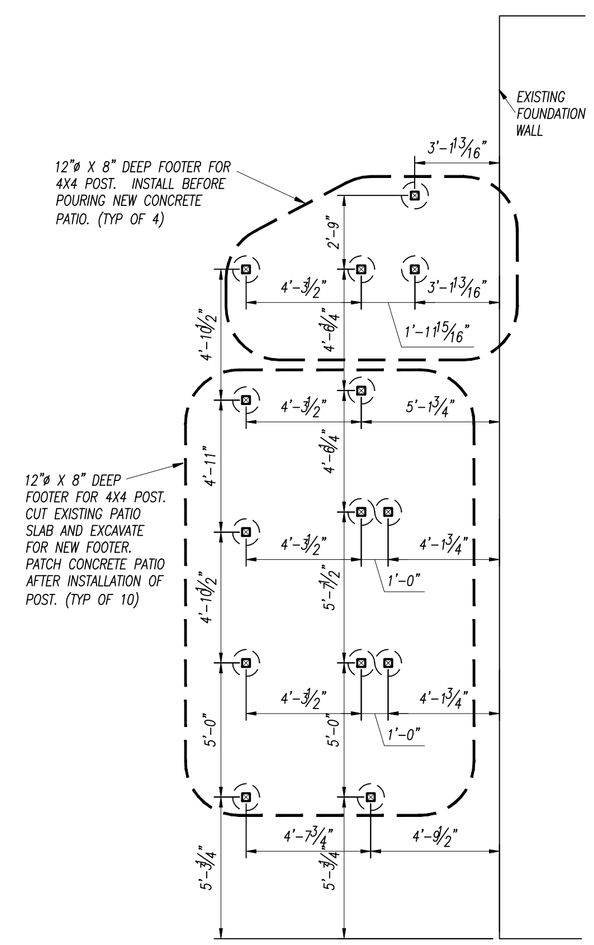

FOUNDATION PLAN

SCALE: 1/4"=1'-0"

FOUNDATION NOTES:

1. Use NO organic materials in compacted fill to place floors at correct elevations.

2. Foundations must be protected from standing water and from freezing.

3. Footing design is based on soil bearing pressure of 1,750 PSF. Contractor shall notify Architect if actual bearing capacity is less than that. Use a minimum of 2,500 PSI concrete for foundations.

4. All footings shall be placed on solid undisturbed earth and be a minimum of 34" below grade for exterior wall or column foundations. Verify depth with local building department.

5. Concrete floor shall be 4", 3,000 PSI concrete with 6 x 6 x 10/10 welded wire fabric on 6 mil vinyl vapor barrier and 4" of crushed stone or gravel, and have a trowelled smooth finish. Exterior conc. shall be 4", 3500 PSI concrete with 6 x 6 x 10/10 welded wire fabric, be air-entrained 5-7%, and have a light broom finish. Welded wire fabric can be replaced by fiberglass reinforcing fibers.

6. Contractors involved in constructing walls, roof or related parts shall be responsible for lateral support of buildings and parts during construction. Provide permanent lateral bracing as shown and noted.

7. Backfill adjacent to foundation wall shall not be placed until the wall has sufficient strength and has been anchored to the floor or has been sufficiently braced to prevent damage by the backfill if the wall has 3 ft or more of unbalanced fill.

8. Use minimum 90% compacted fill for backfilling treated posts.

NOTES:
1. PRESERVATIVE TREATED LUMBER SHALL CONFORM TO THE REQUIREMENTS OF THE APPLICABLE AWPA STANDARD U1 AND M4 FOR THE SPECIES, PRODUCT, PRESERVATIVE AND END USE. PRESERVATIVES SHALL BE LISTED IN SECTION 4 OF AWPA U1.

2. PRESERVATIVE TREATED LUMBER SHALL BEAR THE QUALITY MARK OF AN INSPECTION AGENCY THAT MAINTAINS CONTINUING SUPERVISION, TESTING AND INSPECTION OVER THE QUALITY OF THE PRESERVATIVE-TREATED WOOD. INSPECTION AGENCIES FPR PRESERVATIVE-TREATED WOOD SHALL BE LISTED BY AN ACCREDITATION BODY THAT COMPLIES WITH THE REQUIREMENTS OF THE AMERICAN LUMBER STANDARDS TREATED WOOD PROGRAM, OR EQUIVALENT. THE QUALITY MARK SHALL BE ON A STAMP OR LABEL AFFIXED TO THE PRESERVATIVE-TREATED WOOD, AND SHALL INCLUDE THE FOLLOWING:
IDENTIFICATION OF TREATING MANUFACTURER.
TYPE OF PRESERVATIVE USED
MINIMUM PRESERVATIVE RETENTION (PCF)
END USE FOR WHICH THE PRODUCT IS TREATED
AWPA STANDARD TO WHICH THE PRODUCT WAS TREATED
IDENTITY OF THE ACCREDITED INSPECTION AGENCY

#	REVISED	BY

SEXTON ASSOCIATES ARCHITECTS, inc.
611 HOUSEL CRAFT RD CORTLAND, OH 44410
PH 330-889-0065 FAX 330-889-0065

Documents prepared by the Architect for this project are instruments of the Architect's services for use solely with respect to this Project. The Architect shall retain all common law, statutory and other reserved rights, including the copyright. The Owner shall not reuse or permit the reuse of the Architect' documents except by mutual agreement in writing and with appropriate compensation to the Architect. Submission or distribution of documents to meet official regulatory requirements or for similar purposes in connection with this Project is not to be construed as publication in derogation of the Architect's reserved rights.

PROJECT
ALTERATIONS TO RESIDENCE
ELYRIA, OH 44035

SEAL
Timothy J. Sexton, License #12392
Expiration Date 12/31/2013

DRAWN BY	ORIGINAL PRINT DATE
TS	7/6/2012
CHECKED BY	SCALE
TS	AS NOTED

JOB NO.
2012-10-205-14

SHEET
A1
SHEET 1 OF 8