## PLUMBING PLAN KEY NOTES

1. EXISTING BUILDING SANITARY DRAIN TO THE BUILDING SANITARY SEWER CONNECTED TO PUBLIC SEWER MAIN. APPROXIMATED LOCATION AND DIRECTION OF FLOW, SIZE AS NOTED. EXISTING SANITARY DRAIN IS RUN SUSPENDED FROM FLOOR JOISTS IN THE CRAWL SPACE. PRIOR TO EXITING BUILDING, SEWER DROPS WITH STACK TO BE RUN BELOW GRADE OUTSIDE OF BUILDING. FIELD VERIFY THE SIZE, DEPTH, DIRECTION OF FLOW AND EXACT LOCATION PRIOR TO BID. SEE THE GENERAL NOTES.
2. EXISTING DIAMETER SANITARY DRAIN, SIZES AS NOTED. EXISTING SANITARY DRAIN IS RUN SUSPENDED FROM THE FLOOR JOISTS IN CRAWL SPACE. FIELD VERIFY CONDITIONS.
3. CONNECT NEW HORIZONTAL SANITARY DRAIN LINE TO THE EXISTING BUILDING SANITARY DRAIN AS REQUIRED, SIZES AS NOTED. FIELD VERIFY CONDITIONS. REWORK EXISTING DRAIN AS REQUIRED, MAINTAIN CONNECTION FOR FIXTURES TO REMAIN. RUN NEW SEWER BELOW THE FLOOR, SUSPENDED FROM THE FLOOR JOISTS IN THE CRAWL SPACE AS SHOWN. SEE THE GENERAL NOTES.
4. NEW HORIZONTAL SANITARY DRAIN LINE SUSPENDED FROM THE FLOOR JOISTS IN THE CRAWL SPACE. DRAIN SIZES AS NOTED, SEE THE PIPE HANGING DETAIL. RUN DRAIN AS HIGH AS POSSIBLE, MINIMUM SLOPE PER CODE FOR PIPE SIZE. COORDINATE WITH THE EXISTING CONDITIONS, FLOOR FRAMING AND EQUIPMENT. SEE THE GENERAL NOTES.
5. NEW FLOOR DRAIN, FLUSH WITH FINISH FLOOR, SIZE AS NOTED. SEE THE GENERAL NOTES AND FLOOR DRAIN / TRAP PRIMER DETAIL.
6. RUN HORIZONTAL DRAIN LINE FOR FIXTURE THRU WALL FRAMING, SLOPE AS REQUIRED. SIZE AS NOTED. CONNECT FIXTURE DRAIN TO STACK AS REQUIRED. VENT LINE FROM FIXTURE SHALL RUN UP IN WALL TO ABOVE CEILING AND CONNECT TO VENT CIRCUIT.
7. 2" STANDPIPE DWV STACK RUN UP THRU FLOOR AND INTO WALL ON FIRST FLOOR. PROVIDE 2" WALL CLEANOUT 48" AFF. CONTINUE UP IN WALL TO ABOVE CEILING INTO ATTIC SPACE AND COMBINE WITH ADJACENT FIXTURE VENTS, SIZES AS REQUIRED.
8. WASHING MACHINE OUTLET BOX WITH SUPPLIES AND DRAIN. RUN 2" DRAIN WITH TRAP THRU WALL FRAMING TO 2" STANDPIPE. PROVIDE CLEAN OUT IN STANDPIPE, 48" AFF. PROVIDE 1/2" H & CW SUPPLIES TO OUTLET BOX. PLUMBING CONTRACTOR SHALL PROVIDE 3/4" HOSE CONNECTIONS AND FLEXIBLE DRAIN FOR WASHING MACHINE. SEE WASHING MACHINE OUTLET BOX SPECIFICATIONS.
9. NEW HORIZONTAL CLEANOUT (C.O.) FOR NEW SANITARY DRAIN LOCATED IN CRAWL SPACE. PROVIDE GAS TIGHT PLUG. SIZE AS NOTED.
10. DWV STACK RUN UP THRU FLOOR AND INTO WALL, SIZES AS NOTED. CONNECT FIXTURE DRAIN. CONTINUE UP IN WALL TO ABOVE CEILING INTO ATTIC SPACE AND COMBINE WITH ADJACENT FIXTURE VENTS. PROVIDE SLIP JOINT CONNECTION FOR THE FIXTURE DRAIN AT STACK FOR CLEANOUT.
11. DISHWASHER WITH INTEGRAL BACKFLOW PREVENTER BY OTHERS. PLUMBING CONTRACTOR SHALL RUN 1/2" COLD & HOT WATER LINES THRU CABINETS FROM SINK SUPPLIES AND 1" FLEXIBLE DRAIN CONNECTED TO DISHWASHER TEE INTO TAILPIECE OF SINK WASTE LINE OR GARBAGE DISPOSAL. MAKE ALL PLUMBING CONNECTIONS. DO NOT RUN LINES IN EXTERIOR WALL. COORDINATE WITH SUPPLIER.
12. REMOVE EXISTING PLUMBING FIXTURE. REMOVE EXISTING UNUSED DRAIN, VENT AND SUPPLY LINES AND CAP. SEE THE DEMOLITION NOTES.
13. EXISTING WATER CLOSET TO REMAIN AND BE REUSED. INSPECT AND REPAIR TO RESTORE TO "LIKE-NEW" CONDITION. VERIFY DRAIN, VENT, SUPPLY LINES AND SHUT-OFF VALVE TO BE IN GOOD WORKING CONDITION. REPAIR AS REQUIRED, REPLACE BALLCOCK VALVE AND SEAT.
14. 1 1/2" TUB DRAIN FITTINGS, TAILPIECE AND TRAP. INCREASE TO 2" DRAIN LINE AND RUN SUSPENDED IN CRAWL SPACE.
15. RUN 2" VENT STACK UP IN WALL, TO ABOVE CEILING AND INTO ATTIC SPACE. RUN VENT LINE IN ATTIC SPACE AND COMBINE WITH ADJACENT FIXTURE VENTS. CONNECT TO EXISTING 3" (MINIMUM) VENT THRU ROOF. IF EXISTING VENT THRU ROOF IS UNAVAILABLE, USE 3" VENT UP IN WALL AND PROVIDE NEW 3" VENT THRU ROOF. SEE GENERAL NOTES AND VENT THRU ROOF DETAIL.
16. NEW FLOOR CLEAN OUT WITH SLIP RESISTANT GAS TIGHT LID, SIZE AS NOTED. SEE THE GENERAL NOTES AND THE CLEAN OUT DETAIL.
17. REMOVE EXISTING HOSE BIBB ON EXTERIOR WALL. WATER SUPPLY BRANCH LINE FROM MAIN WATER LINE. FIELD VERIFY CONDITIONS.
18. 3/4" CW LINE, CONNECT HOSE BIBB. INSTALL PER THE MANUFACTURER'S REQUIREMENTS. PROVIDE OPTIONAL WALL SLEEVE ASSEMBLY. SEAL THE GAP BETWEEN WALL AND FAUCET TO PREVENT LEAKS. PROVIDE ADEQUATE INSULATION AROUND FAUCET AND SUPPLY LINE. SEE THE GENERAL NOTES.
19. REFRIGERATOR RELOCATED BY OTHERS. IF REQUIRED, PLUMBING CONTRACTOR SHALL CONNECT ICE MAKER. PROVIDE FLEXIBLE 3/8" LINE RUN THRU BASE CABINETS FROM SINK SUPPLY. PROVIDE SHUTOFF AND FITTINGS. COORDINATE.
20. FLOOR ACCESS OPENING BY OTHERS. PLUMBING CONTRACTOR SHALL COORDINATE LOCATION OF PLUMBING LINES IN CRAWL SPACE TO PERMIT ACCESS. VERIFY LOCATION WITH GENERAL CONTRACTOR.
21. PLUMBING CONTRACTOR SHALL PROVIDE PAN BY E.L. MUSTEE OR EQUAL UNDER WASHING MACHINE. ONE-PIECE MOLDED FIBERGLASS, 32" x 30" WITH 2 1/2" SHOULDER, REMOVABLE FRONT THRESHOLD WITH WATER TIGHT SEAL. DRAIN IN PAN NOT REQUIRED. SECURE TO SUB-FLOOR. COORDINATE SIZE AND STYLE WITH MANUFACTURER PRIOR TO ORDERING.
22. 3" PVC INTAKE AND EXHAUST LINES FROM WATER HEATER, RUN UP THRU CEILING INTO ATTIC SPACE AND UP THRU ROOF. OFFSET AS REQUIRED. COORDINATE WITH DUCTWORK AND EQUIPMENT. INSTALL FACTORY CONCENTRIC TERMINAL FOR WATER HEATER. WORK AND MATERIALS PER MANUFACTURER'S REQUIREMENTS AND CODE. SEE WATER HEATER FLUE DETAIL.
23. REMOVE EXISTING SHUT OFF VALVE, FITTINGS AND WATER METER. RELOCATE EXISTING WATER METER OR PROVIDE NEW 3/4" METER (IF REQUIRED) LOCATED IN THE UTILITY ROOM. CONNECT TO THE EXISTING 3/4" SERVICE LINE IN THE CRAWL SPACE AS REQUIRED AND EXTEND TO NEW METER LOCATION. COORDINATE WITH LOCAL WATER UTILITY COMPANY. SEE WATER METER DETAIL FOR ADDITIONAL WORK REQUIRED. PROVIDE 3/4" WATER LINE FROM METER AND RUN TO WATER HEATER. DISTRIBUTE 3/4" COLD WATER LINES SUSPENDED IN CRAWL SPACE TO NEW FIXTURES AND RECONNECT EXISTING FIXTURES TO REMAIN. SEE GENERAL NOTES, PIPE HANGING DETAIL AND FIXTURE SCHEDULE.
24. RUN 3/4" CW SUPPLY LINE TO WATER HEATER. RUN 3/4" HW SUPPLY LINE FROM WATER HEATER AND DISTRIBUTE TO FIXTURES AS REQUIRED, EXTEND AND RECONNECT EXISTING FIXTURES TO REMAIN. PROVIDE REDUCERS AND SHUT-OFFS AS REQUIRED. RUN LINES SUSPENDED IN CRAWL SPACE. SEE THE GENERAL NOTES, PIPE HANGING DETAIL AND FIXTURE SCHEDULE.
25. RECONNECT EXISTING BRANCHES OR INDIVIDUAL SUPPLY LINES TO EXISTING FIXTURES TO REMAIN, I.E. EXISTING TOILET. EXTEND EXISTING LINES TO VANITY SINK. PROVIDE SHUT OFFS AND FITTINGS AS REQUIRED.
26. RUN 1/2" H & CW SUPPLY LINES UP THRU FLOOR AND INTO CABINET SPACE. CONNECT FIXTURE, PROVIDE REDUCERS AND SHUT-OFFS AS REQUIRED. DO NOT RUN SUPPLY LINES IN EXTERIOR WALL.
27. NEW DOMESTIC WATER SUPPLY LINE(S) RUN UP IN WALL FROM CRAWL SPACE. PROVIDE 1/2" HW & CW DOMESTIC SUPPLY LINES TO FIXTURES (1/2" CW FOR WATER CLOSET). RUN UP IN WALL AND CONNECT FIXTURE, DISTRIBUTE TO FIXTURE AS SCHEDULED. PROVIDE REDUCERS AND SHUT-OFFS AS REQUIRED. TYPICAL.
28. EXISTING GAS METER TO REMAIN. REMOVE ALL EXISTING GAS LINES RUN THRU WALL AND INTO CRAWL SPACE. FIELD VERIFY CONDITIONS. RUN NEW 3/4" GAS LINE UP EXTERIOR WALL, THRU SOFFIT AND INTO VENTED ATTIC SPACE ABOVE ROOF INSULATION. ANCHOR LINE TO BUILDING, PAINT PIPING TO MATCH BUILDING EXTERIOR. WHERE EXISTING GAS LINE IS RUN UP WALL INTO ATTIC SPACE AND OF ADEQUATE SIZE, LINE MAY BE REUSED. SEE NOTES TO GAS SERVICE.
29. NEW NATURAL GAS LINE RUN THRU VENTED ATTIC SPACE ABOVE ROOF INSULATION, SIZE AS NOTED. SEE THE PIPE HANGING DETAIL. COORDINATE ROUTE OF GAS LINE WITH EXISTING ROOF STRUCTURE AND DUCTWORK (SEE HVAC PLAN). FIELD VERIFY CONDITIONS.
30. RUN 3/4" GAS LINE DOWN FROM VENTED ATTIC SPACE THRU CEILING ALONG WALL. CONNECT GAS FIRED FURNACE AND WATER HEATER. RUN 3/4" GAS LINE TO FURNACE AND 1/2" GAS LINE TO WATER HEATER. PROVIDE REDUCER, FITTINGS AND ACCESSIBLE SHUT OFF VALVE. SEE GAS CONNECTION DETAIL. COORDINATE WITH HVAC CONTRACTOR.

## DEMOLITION NOTES

1. ALL ITEMS OF DEMOLITION TO BE REMOVED AS SHOWN AND AS REQUIRED FOR NEW WORK ARE TO BECOME THE PROPERTY OF THE PLUMBING CONTRACTOR AFTER THE OWNER'S RELEASE.
2. PLUMBING CONTRACTOR SHALL REMOVE FROM THE SITE AND PROPERLY DISPOSE OF ALL DEMOLITION ITEMS AND MATERIALS NOT TO BE TURNED OVER TO THE OWNER.
3. REMOVE ALL UNUSED PLUMBING FIXTURES, FLOOR DRAINS, DRAINS AND VENTS. CAP ALL LINES NOT BEING USED AT 2" BELOW FLOOR AND PATCH FLOOR TO MATCH THE EXISTING CONDITIONS. UNUSED PLUMBING LINES THAT PENETRATE EXISTING WALLS TO REMAIN SHALL BE CAPPED INSIDE OF THE WALL. DISCONNECT FROM MAIN LINE TO REMAIN AND CAP. THE WALL SHALL BE PATCHED AND MADE READY FOR NEW FINISHES. LINES ABOVE CEILINGS SHALL BE REMOVED COMPLETELY.
4. THE OWNER MAY REQUEST SOME ITEMS TO BE SALVAGED FOR FUTURE RE-USE. ALL ITEMS TO BE DISPOSED OF SHALL BE REMOVED FROM THE PREMISES BY THE PLUMBING CONTRACTOR.
5. PLUMBING CONTRACTOR TO FIELD VERIFY ALL CONDITIONS AND DIMENSIONS SHOWN FOLLOWING DEMOLITION. ALL SIGNIFICANT VARIATIONS SHALL BE REPORTED TO THE OWNER'S REPRESENTATIVE.
6. ALL DEMOLITION WORK SHALL BE CARRIED OUT IN A MANNER WHICH IS SAFE AND NON-INTERFERRING TO THE OCCUPANTS, ADJACENT SPACES, SUBCONTRACTORS WORK AND THE OVERALL USE OF THE BUILDING. DEMOLITION WORK SHALL BE PERFORMED DURING TIMES APPROVED BY THE OWNER. COORDINATE SCHEDULE WITH THE OWNER'S REPRESENTATIVE.
7. PLUMBING CONTRACTOR SHALL COMPLETE ALL DEMOLITION REQUIRED IN ORDER TO PROVIDE A COMPLETE PROJECT AS SHOWN ON THE DRAWINGS AND AS DESCRIBED IN THE DRAWING NOTES.
8. ALL ITEMS NOT SHOWN OR NOTED TO BE REMOVED ARE TO REMAIN.
9. SEE THE ARCHITECTURAL DEMOLITION PLAN FOR ADDITIONAL DEMOLITION INFORMATION. PLUMBING CONTRACTOR SHALL COORDINATE WITH THE GENERAL CONTRACTOR SO THAT PLUMBING LINES TO REMAIN ARE NOT REMOVED OR DAMAGED DURING DEMOLITION BY OTHERS.
10. COORDINATE PLUMBING DEMOLITION AND EXCAVATION WITH EXISTING UNDERFLOOR UTILITIES INCLUDING ANY UNDERFLOOR WATER PIPING, SEWER LINES AND ELECTRICAL CONDUITS.
11. REMOVE ALL UNUSED GAS LINES FOR EXISTING EQUIPMENT TO BE REMOVED. REMOVE UNUSED GAS LINES BACK TO MAIN GAS LINES TO REMAIN AND CAP OPENING. PROVIDE ADEQUATE SUPPORT FOR GAS LINES TO REMAIN.

## WASHING MACHINE OUTLET BOX SPECIFICATIONS

PLUMBING CONTRACTOR SHALL PROVIDE A RECESSED WASHING MACHINE WATER OUTLET AND DRAIN BOX "SIOUX CHIEF" #696-2313MF. DRAIN BOX IS SUPPLIED WITH 2" DRAIN COUPLING, WATER TEST KNOCKOUT CAP AND TOP DRAIN KNOCKOUT. WATER SUPPLY BOX IS SUPPLIED WITH DUAL INLET HOLES FOR 1/2" SUPPLY LINES. OUTLET BOX SHALL HAVE DUAL 1/4 TURN SHUT OFF VALVES AND DUAL WATER HAMMER ARRESTERS. ARRESTERS SHALL BE ASSE 1010 CERTIFIED AA SIZE (ONE EACH ON HOT AND COLD WATER SUPPLY LINES). WITH MATCHING WHITE COVER PLATE / DOUBLE FRAME #696-2F. INSTALL PER MANUFACTURER'S INSTRUCTIONS. PROVIDE ALL BLOCKING INSIDE WALL AS REQUIRED.

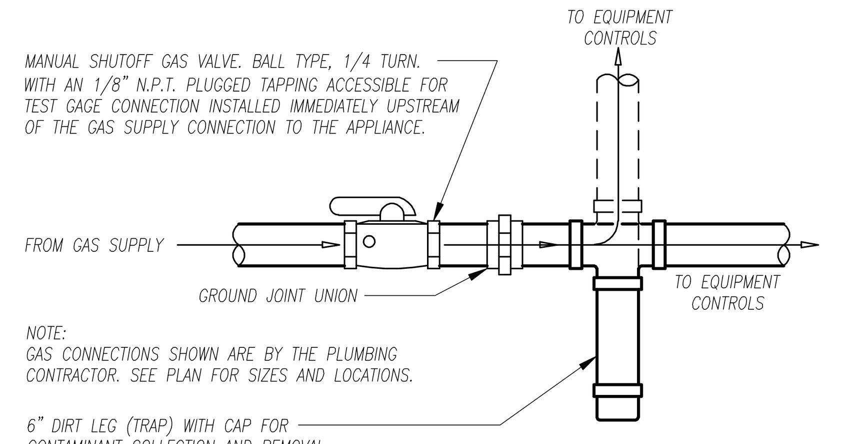


## GAS CONNECTION DETAIL
SCALE: NONE

## GENERAL NOTES

1. FLOOR DRAINS SHALL BE BOTTOM OUTLET, WITH HEEL PROOF SLIP RESISTANT STRAINER COVER. SIOUX CHIEF "FINISH LINE", ABS/PVC, ADJUSTABLE FLOOR DRAIN. COMPLETE ASSEMBLY SHALL BE #832 SERIES (SIZE AS NOTED ON PLAN), WITH INTEGRAL 1/2" TRAP PRIMER FITTING AND 6 1/2" DIAMETER ROUND CAST NICKEL DRAIN COVER. FLOOR DRAIN SHALL ALLOW 1.25" ADJUSTMENT BEFORE AND AFTER FLOOR FINISH APPLICATION. TOP OF DRAIN SHALL BE FLUSH WITH FINISH FLOOR. PROVIDE TRAP PRIMER PER CODE.
2. FLOOR CLEAN OUTS TO BE SIOUX CHIEF "FINISH LINE", ABS/PVC, ADJUSTABLE FLOOR LEVEL CLEAN OUT. COMPLETE ASSEMBLY TO BE #834 SERIES (SIZE AS NOTED ON PLAN). 6 1/2" DIAMETER ROUND GAS TIGHT, SLIP RESISTANT CAST NICKEL DECK LID. CLEAN OUT TO ALLOW 1.25" ADJUSTMENT BEFORE AND AFTER FLOOR FINISH APPLICATION. TOP OF CLEAN OUT TO BE FLUSH WITH FINISH FLOOR. WALL CLEAN OUTS IN PARTITIONS TO HAVE CHROME COVER AND SIOUX CHIEF OR EQUAL CLEAN OUT. MOUNT COVER FLUSH TO FINISH WALL.
3. HOSE BIBS (FPHB) AT THE EXTERIOR OF BUILDING SHALL BE FREEZE PROOF, WOODFORD #17 OR EQUAL WALL FAUCET WITH STANDARD BRASS FINISH. ASSE STANDARD 1019-C APPROVED. INTEGRAL BACKFLOW PROTECTION DEVICE, NO ADD-ON VACUUM BREAKER REQUIRED. WITH ROUND WHEEL HANDLE. PROVIDE MOUNTING SLEEVE #WF-MS. COORDINATE INLET TYPE AND WALL THICKNESS PRIOR TO ORDERING.
4. PROVIDE NEW FIXTURE VENTS AND VENT CIRCUITS AS SHOWN, CONNECT TO THE EXISTING VENT THRU ROOF, FIELD VERIFY. IF EXISTING VENT THRU ROOF IS INADEQUATE OR UNAVAILABLE THEN THE PLUMBING CONTRACTOR SHALL PROVIDE NEW VENT (3" MINIMUM) THRU ROOF, OFFSET AS REQUIRED.
5. PLUMBING CONTRACTOR SHALL BE RESPONSIBLE FOR ALL ROOF VENTS, EQUIPMENT FLUES, PIPE PENETRATIONS, ETC. AS REQUIRED FOR PLUMBING WORK. PLUMBING CONTRACTOR SHALL USE AN APPROVED ROOFING CONTRACTOR AT PLUMBER'S DIRECT EXPENSE. COORDINATE WITH THE BUILDING SYSTEM AND GENERAL CONTRACTOR.
6. THE PLUMBING CONTRACTOR SHALL CALL AND COORDINATE WITH THE LOCAL UTILITY COMPANIES PRIOR TO ANY EXCAVATION FOR NEW UNDERGROUND UTILITIES, TO VERIFY THE LOCATION OF EXISTING UNDERGROUND OR UNDER FLOOR UTILITIES.
7. EXISTING BUILDING SANITARY SEWERS AND DRAINS SHALL CONNECT WITH THE NEW BUILDING SANITARY SEWER AND DRAINAGE SYSTEMS ONLY WHERE EXISTING LINES ARE FOUND BY DIRECT EXAMINATION AND TESTING TO CONFORM TO THE NEW SYSTEM IN PERFORMANCE AND QUALITY OF MATERIALS. ADDITIONAL DRAINAGE LOADS SHALL NOT BE PERMITTED TO OVERLOAD THE EXISTING LINES. THE PLUMBING CONTRACTOR SHALL COORDINATE WITH EXISTING CONDITIONS AND THE BUILDING AUTHORITY. PLUMBING CONTRACTOR SHALL REPAIR OR REPLACE ALL SEWER AND DRAIN LINES WHERE CONDITIONS REQUIRE. PLUMBING CONTRACTOR SHALL VERIFY THAT THE EXISTING SEWER AND DRAIN ELEVATIONS ARE ADEQUATE TO ALLOW EXTENSION OF NEW LINES TO NEW FIXTURE LOCATIONS WHILE MAINTAINING MINIMUM SLOPES FOR THE PIPE SIZES REQUIRED.
8. PLUMBING CONTRACTOR SHALL PROVIDE AN ALTERNATE BID TO FLUSH AND CLEAN OUT EXISTING SEWER AND DRAIN LINES TO REMAIN AND BE REUSED. ALTERNATE BID SHALL INCLUDE VIDEO INSPECTION OF SANITARY SEWER AND DRAIN LINES LOCATED IN THE BUILDING RELATED TO THE RENOVATION TO THE PUBLIC / CITY SEWER LINE CONNECTION. ALTERNATE BID SHALL INCLUDE PROVIDING THE OWNER'S REPRESENTATIVE A DETAILED ANALYSIS, REPORT AND VIDEO OF ALL INSPECTED SEWER AND DRAIN LINES. THE REPORT SHALL PROVIDE DETAILED INFORMATION ON PIPE SIZE, CONDITION, LINE SLOPE, POTENTIAL CORROSION, LINE BOWS OR DROPS AND ALL OTHER CRITICAL CONDITION INFORMATION THAT MAY IMPACT THE PROPER OPERATION OF THE SANITARY SEWER AND DRAINAGE SYSTEMS.
9. WHERE RUNNING NEW PLUMBING LINES THRU THE EXISTING FIRST FLOOR, PLUMBING CONTRACTOR SHALL DRILL THRU THE FLOOR AND PATCH FLOOR SYSTEM TO MATCH EXISTING CONDITIONS. PENETRATIONS SHALL BE SLEEVED AND WATER STOPPED PER CODE. COORDINATE FLOOR PENETRATIONS WITH THE EXISTING CONDITIONS. DO NOT CUT OR DAMAGE FLOOR JOISTS OR STRUCTURAL MEMBERS.
10. WHERE NOTED, THE PLUMBING CONTRACTOR SHALL SUSPEND PLUMBING LINES BELOW THE EXISTING FLOOR AND RUN THEM HORIZONTAL. SUSPEND PLUMBING LINES WITH HANGERS AT INTERVALS SUITABLE FOR PIPE. ALIGN THE HANGING RODS SO AS NOT TO DAMAGE THE EXISTING STRUCTURAL MEMBERS OR FLOOR SYSTEM. DO NOT CUT OR DAMAGE STRUCTURAL MEMBERS. PROVIDE BLOCKING AND EXTRA SUPPORT AS REQUIRED. MINIMUM SLOPE OF DRAINS SHALL BE PER CODE FOR PIPE SIZE. COORDINATE DRAIN LOCATIONS AND FLOOR PENETRATIONS WITH THE EXISTING FLOOR SYSTEM, UTILITIES, ELECTRICAL CONDUIT, STRUCTURAL MEMBERS, ETC. RUN LINES IN CRAWL SPACE AS HIGH AS POSSIBLE. FIELD VERIFY CONDITIONS.
11. ADDITIONAL SUPPORT FOR SUSPENDED PLUMBING LINES, NEW FIXTURES OR THE EXISTING FLOOR SYSTEM DUE TO PENETRATIONS SHALL BE PROVIDED BY THE PLUMBING CONTRACTOR. THE PLUMBING CONTRACTOR TO REMOVE FROM THE SITE AND DISPOSE OF ALL MATERIALS REMOVED FOR FLOOR DEMOLITION.

## NOTES TO FLOOR DRAIN DETAIL

1. FLOOR DRAINS SHALL COMPLY WITH THE OPC 412, TRAP SEALS SHALL COMPLY WITH THE OPC 1002.4. WHERE THE FLOOR DRAIN TRAP SEAL IS SUSCEPTIBLE TO LOSS BY EVAPORATION, PROVIDE TRAP SEAL PRIMER VALVE AND ACCESSORIES TO MAINTAIN TRAP SEAL. THE TRAP SEAL PRIMER LINE SHALL CONNECT TO TRAP INLET ABOVE THE LEVEL OF THE TRAP SEAL PROVIDE VACUUM BREAKER AND AIR GAP FITTING AS REQUIRED TO PROTECT THE POTABLE WATER SUPPLY FROM CROSS CONTAMINATION.
2. TRAP SEAL PRIMER VALVE SHALL HAVE A FINE MESH BRASS FILTER AND MUST BE ACCESSIBLE FOR SERVICE AND REPLACEMENT. INSTALL PRIMER VALVE AND ACCESSORIES IN AN ACCESSIBLE LOCATION OR PROVIDE ACCESS DOORS AS REQUIRED.
3. TRAP SEAL PRIMER VALVE SHALL HAVE AIR GAP FITTING AS REQUIRED BY CODE. LOCATE IN AN AREA WHERE SPLASHING WATER WILL NOT BE OBJECTIONABLE OR CAUSE DAMAGE TO THE BUILDING. INSTALL PRIMER VALVE AND ACCESSORIES IN AN ACCESSIBLE LOCATION IN A MECHANICAL ROOM OR ABOVE A SERVICE SINK OR PROVIDE MANUFACTURER'S ENCLOSURE WITH DRAIN. COORDINATE WITH THE MANUFACTURER'S INSTALLATION INSTRUCTIONS AND GENERAL CONTRACTOR.

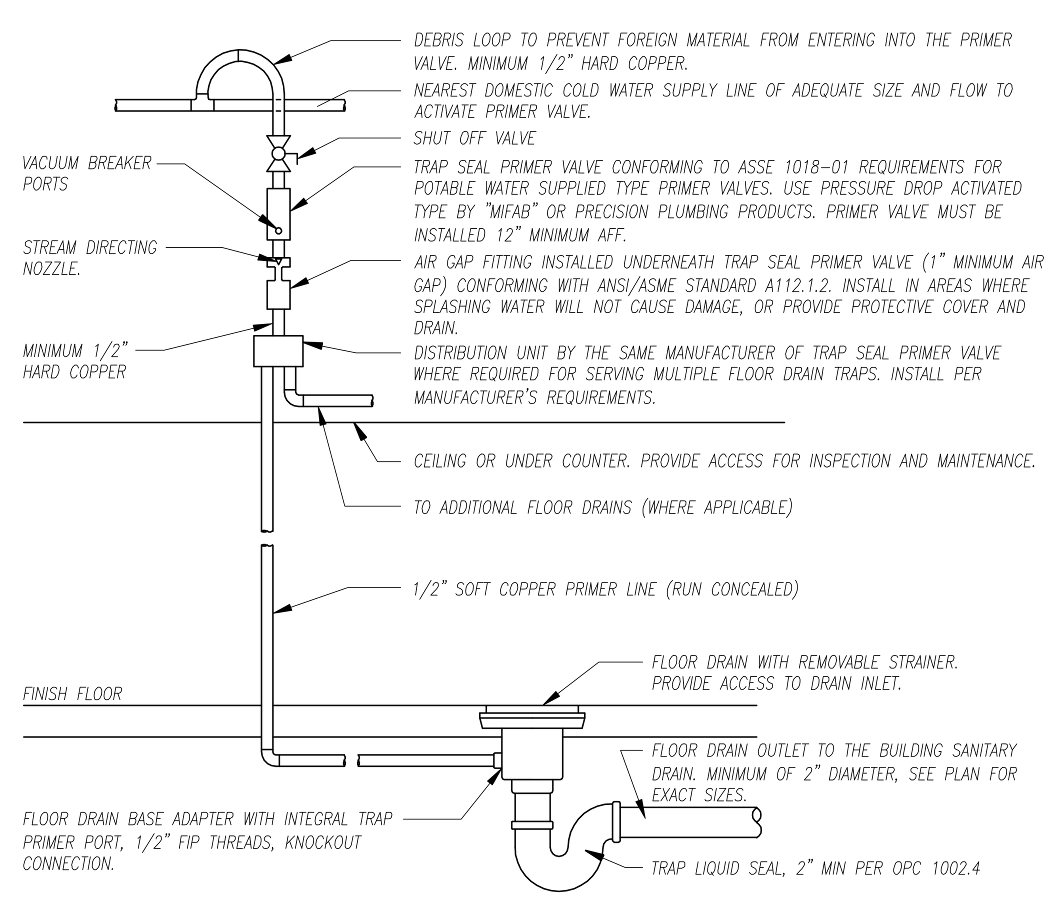


## FLOOR DRAIN – TRAP PRIMER DETAIL
SCALE: NONE

NOTE:
THE INFORMATION CONTAINED ON THIS DRAWING WAS COMPILED FROM FIELD OBSERVATIONS AND FROM INFORMATION FURNISHED BY THE OWNER'S REPRESENTATIVE AS DESCRIBING ACCURATELY THE EXISTING METHODS AND MATERIALS USED IN THE ORIGINAL CONSTRUCTION. ONCE DEMOLITION IS COMPLETE THE CONTRACTOR MUST FIELD VERIFY CONDITIONS AND COORDINATE WITH THE GENERAL CONTRACTOR AND THE OWNER. DO NOT ORDER EQUIPMENT OR FABRICATE EQUIPMENT BEFORE FIELD CONDITIONS ARE VERIFIED.

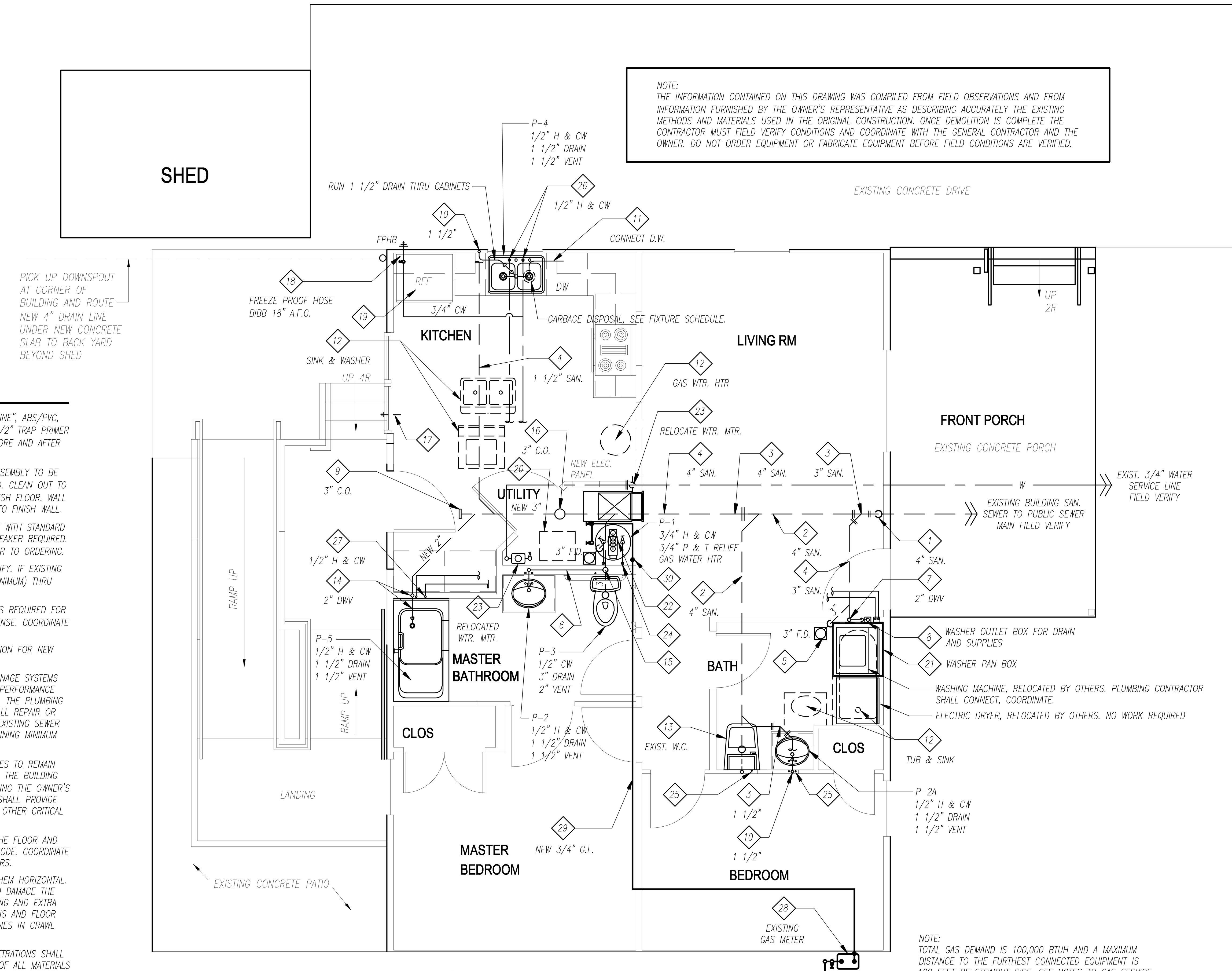


NOTE:
TOTAL GAS DEMAND IS 100,000 BTUH AND A MAXIMUM DISTANCE TO THE FURTHEST CONNECTED EQUIPMENT IS 100 FEET OF STRAIGHT PIPE. SEE NOTES TO GAS SERVICE.
EXISTING GAS LINE TO CONNECTION AT UTILITY MAIN. FIELD VERIFY EXISTING SERVICE WILL BE ADEQUATE FOR NEW GAS DEMAND PRIOR TO BID.

## PLUMBING PLAN
**SCALE: 1/4"=1'-0"**

## NOTES TO WATER HEATER DETAIL:

1. GAS FIRED WATER HEATER SHALL BE INSTALLED IN ACCORDANCE WITH THE MANUFACTURER'S WRITTEN INSTALLATION INSTRUCTIONS. GAS FIRED WATER HEATER SHALL ALSO CONFORM TO THE REQUIREMENTS OF THE INTERNATIONAL FUEL GAS CODE.
2. PLUMBING CONTRACTOR SHALL PROVIDE DRAINAGE PAN FOR WATER HEATER PER THE OPC 504.7, 24 GAUGE MINIMUM GALVANIZED STEEL OR APPROVED MATERIAL. 1 1/2" DEEP MINIMUM WITH 3/4" DRAIN LINE TO INDIRECT WASTE RECEPTOR WITH AIR BREAK AT DISCHARGE. PAN DRAIN SHALL TERMINATE PER THE OPC 504.7.2
3. WHERE DEVELOPED LENGTH OF HOT WATER PIPING EXCEEDS 100 FEET FROM THE SOURCE TO THE FARTHEST FIXTURE, PLUMBING CONTRACTOR SHALL PROVIDE EQUIPMENT TO MAINTAIN WATER TEMPERATURES IN ACCORD WITH THE OPC 607.2 (APPLICABLE STANDARD REFERENCED PER CHAPTER 13 OF THE OHIO BUILDING CODE). PLUMBING CONTRACTOR SHALL USE EITHER HOT WATER RECIRCULATING SYSTEM OR HEAT TRACE TAPE. INSULATE THE CIRCULATING HOT WATER PIPING PER THE APPLICABLE STANDARD REFERENCED IN THE CODE. COORDINATE HEAT TRACE TAPE OR RECIRCULATING PUMP REQUIREMENTS WITH ELECTRICAL CONTRACTOR AS APPLICABLE.
4. PROVIDE MIXING VALVE AT FIXTURE TO LIMIT THE WATER TEMPERATURE TO 120 DEGREES AT COMBINATION TUB-SHOWER VALVE. SEE FIXTURE FAUCET SPECIFICATION, PLUMBING CONTRACTOR SHALL SET LIMIT FOR MAXIMUM 120 DEGREES. AN INDIVIDUAL TEMPERATURE CONTROL VALVE AT TUB-SHOWER MUST BE USED TO LIMIT WATER TEMPERATURE TO 120 DEGREES, A MASTER MIXING VALVE AT WATER HEATER SHALL NOT BE SUBSTITUTED FOR INDIVIDUAL FIXTURE VALVE WITH TEMPERATURE LIMIT.

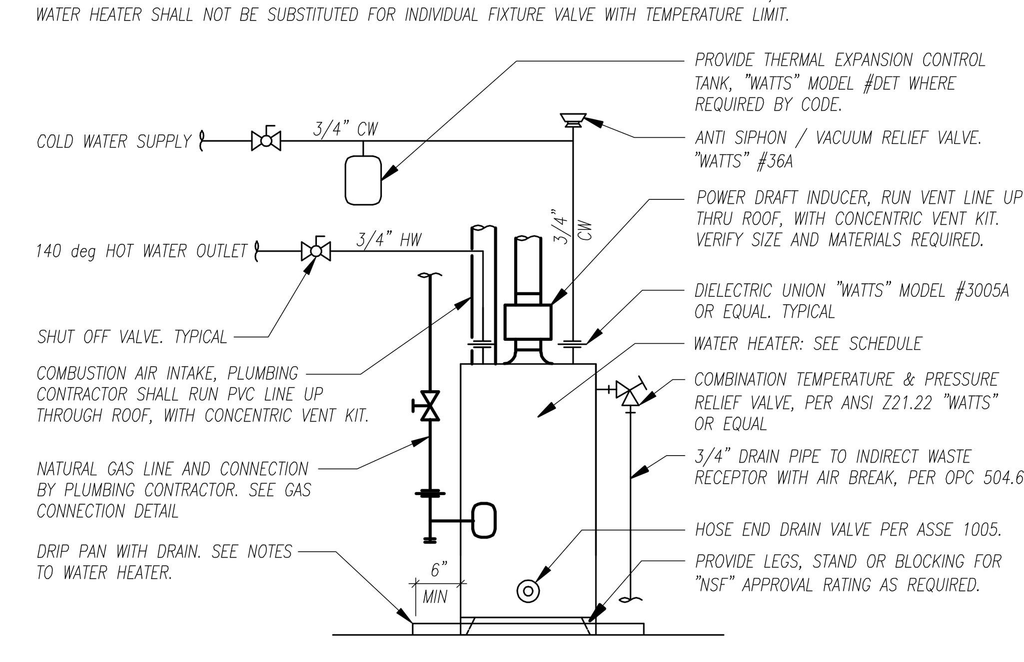


## WATER HEATER DETAIL
SCALE: NONE

## WATER METER NOTES:

1. REPLACE, REPAIR AND PROVIDE NEW COMPONENTS AS REQUIRED. FIELD VERIFY CONDITIONS AND THE PROPER FUNCTIONING OF WATER METER, VALVES AND ACCESSORIES. PLUMBING CONTRACTOR SHALL COORDINATE WITH THE LOCAL WATER UTILITY COMPANY, CONDITIONS IN THE FIELD AND THE OWNER'S REPRESENTATIVE PRIOR TO BID.
2. PROVIDE ADDITIONAL HANGERS AND SUPPORTS FOR THE WATER LINE AND METER AS REQUIRED.
3. NO SOLDER FITTINGS MAY BE USED FROM SERVICE LINE TO WATER METER, REPLACE FITTINGS IF REQUIRED.
4. SEE THE WATER HEATER DETAIL FOR LOCATION AND DESCRIPTION OF THERMAL EXPANSION CONTROL TANK.
5. MAINTAIN EXISTING OR PROVIDE NEW BONDING JUMPER FOR WATER LINE PER WATER UTILITY COMPANY REQUIREMENTS. USE A MINIMUM #6 COPPER WIRE WITH COPPER CLAMPS. COORDINATE WITH THE ELECTRICAL CONTRACTOR.
6. REUSE AND RECONNECT EXISTING WATER METER, COORDINATE WITH LOCAL WATER UTILITY COMPANY. WHERE METER MUST BE REPLACED, PLUMBING CONTRACTOR SHALL PROVIDE A NEW ODOMETER TYPE INDEX WATER METER WITH REMOTE READER AT PLUMBING CONTRACTOR'S DIRECT EXPENSE. PLUMBING CONTRACTOR SHALL PURCHASE WATER METER DIRECTLY FROM THE WATER UTILITY COMPANY AND PAY FOR ALL PERMITS, TAP IN FEES AND USER FEES. COORDINATE WITH THE WATER UTILITY COMPANY PRIOR TO BID.

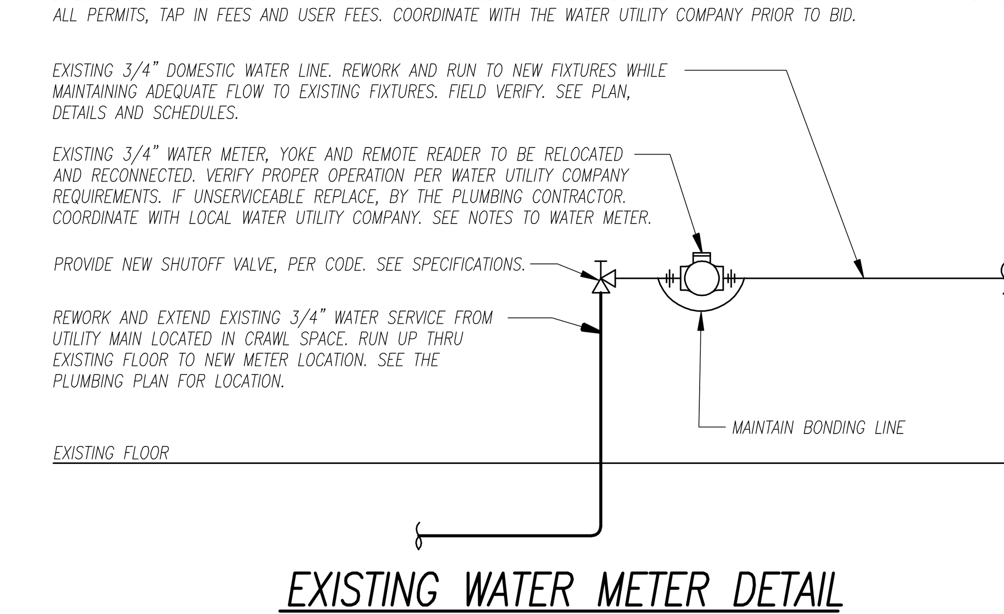


## EXISTING WATER METER DETAIL
SCALE: NONE

| # | REVISED | BY |
|---|---|---|
| | | |

**SEXTON & ASSOCIATES ARCHITECTS, inc.**
611 HOUSEL CRAFT RD CORTLAND, OH 44410
PH 330-889-0065 FAX 330-889-0065


**Documents prepared by the Architect for this project are instruments of the Architect's services for use solely with respect to this Project. The Architect shall retain all common law, statutory and other reserved rights, including the copyright. The Owner shall not reuse or permit the reuse of the Architect' documents except by mutual agreement in writing and with appropriate compensation to the Architect. Submission or distribution of documents to meet official regulatory requirements or for similar purposes in connection with this Project is not to be construed as publication in derogation of the Architect's reserved rights.**


PROJECT
**ALTERATIONS TO RESIDENCE**
**ELYRIA, OH 44035**

SEAL

| DRAWN BY | ORIGINAL PRINT DATE |
|---|---|
| RJ | 7/6/2012 |
| CHECKED BY | SCALE |
| TS | AS NOTED |

JOB NO.
**2012-10-205-14**

SHEET
**P1**
SHEET 3 OF 8