HVAC SPECIFICATIONS

1. VERIFY CONDITIONS IN THE FIELD, HVAC PLANS ARE SCHEMATIC. COORDINATE CONSTRUCTION ACTIVITIES WITH THE OWNER AND RESPECTIVE SUB CONTRACTORS AS WELL AS THE SCHEDULE FOR FINAL INSPECTION BY THE BUILDING AUTHORITY(S). DO NOT SCALE DRAWINGS. SEE THE ARCHITECTURAL DRAWINGS FOR EXACT LOCATIONS AND DIMENSIONS. PRIOR TO BEGINNING WORK THE HVAC CONTRACTOR SHALL FIELD VERIFY EXISTING CONDITIONS AND DETERMINE THE EXTENT OF WORK AND MAKE ALLOWANCES TO PROVIDE ALL WORK AND MATERIALS AS REQUIRED FOR A COMPLETE, WORKABLE AND CODE COMPLIANT INSTALLATION. REPORT ALL DISCREPANCIES TO THE OWNER'S REPRESENTATIVE IMMEDIATELY.
2. HVAC EQUIPMENT AND MATERIALS SHALL COMPLY WITH AND BE INSTALLED IN ACCORDANCE WITH THE APPLICABLE STATE AND LOCAL CODES BY A LICENSED CONTRACTOR PER GOVERNING AUTHORITIES HAVING JURISDICTION ON THE PROJECT. THE HVAC DRAWINGS AND GENERAL PROVISIONS OF THE CONTRACT, INCLUDING THE GENERAL AND SUPPLEMENTARY CONDITIONS AND THE SPECIFICATION SECTIONS, APPLY TO THE HVAC SCOPE OF WORK. THE HVAC CONTRACTOR SHALL BE RESPONSIBLE FOR THE METHODS, MEANS, SEQUENCES, TECHNIQUES AND PROCEDURES OF CONSTRUCTION AS WELL AS WORKER SAFETY.
3. HVAC CONTRACTOR SHALL PROCURE AND PAY FOR ALL REQUIRED HVAC PERMITS AND INCLUDE THEM AS PART OF THE BASE BID. CERTIFICATES OF INSPECTION AND APPROVAL SHALL BE OBTAINED BY THE HVAC CONTRACTOR FROM THE HVAC INSPECTOR AND BE FORWARDED TO THE OWNER'S REPRESENTATIVE BEFORE FINAL ACCEPTANCE OF THE WORK.
4. DUCTWORK SHALL BE LOW PRESSURE TYPE, CONSTRUCTED OF GALVANIZED SHEET METAL, EXCEPT WHERE NOTED OTHERWISE. DUCTWORK SHALL CONFORM WITH THE DESIGN CRITERIA SET FORTH IN THE OHIO RESIDENTIAL CODE (CHAPTER 16) AS WELL AS ACCA MANUAL D. FLEXIBLE AIR DUCT MUST BE USED FOR FINAL CONNECTION TO AIR DEVICES, BUT IS NOT LIMITED IN LENGTH WHERE PERMITTED BY LOCAL CODE. FLEXIBLE AIR DUCTS TO BE INSULATED, THERMAFLEX "M-KC" BY FLEX-TEK OR EQUAL, CLASS 1 AIR DUCT. FLEXIBLE AIR CONNECTORS SHALL BE NON-INSULATED, THERMAFLEX "S-LD" BY FLEX-TEK OR EQUAL CLASS 1 AIR DUCT. FLEXIBLE AIR CONNECTORS SHALL NOT PASS THROUGH ANY WALL, FLOOR OR CEILING AND SHALL BE LIMITED IN LENGTH TO 14 FEET. FLEXIBLE AIR DUCTS AND FLEXIBLE AIR CONNECTORS SHALL BE LISTED AND LABELED PER UL 181 STANDARD FOR FACTORY MADE AIR DUCTS AND AIR CONNECTORS. FLEXIBLE AIR DUCT AND FLEXIBLE AIR CONNECTORS SHALL ALSO CONFORM WITH NFPA 90A AND 90B STANDARDS, MAXIMUM SMOKE-DEVELOPED INDEX OF 50 AND MAXIMUM FLAME SPREAD INDEX OF 25 PER ASTM E 84 OR UL 273. ALL CONNECTIONS OF FLEXIBLE AIR DUCT AND FLEXIBLE AIR CONNECTORS TO BE MADE WITH MECHANICAL FASTENERS, UL 181B LISTED AND LABELED, METALLIC OR PLASTIC CLAMPS AS PERMITTED BY LOCAL CODE. ALL DUCT TAKE-OFFS SHALL HAVE DAMPERS AND EXTRACTORS. SQUARE ELBOWS SHALL HAVE DOUBLE THICKNESS INTERNAL TURNING VANES. ALL DUCT JOINTS, SEAMS AND CONNECTIONS TO COMPLY WITH THE OMC SECTION 603.9. CLOSURE SYSTEMS FOR METALLIC DUCT SHALL BE INSTALLED PER MANUFACTURER'S INSTALLATION INSTRUCTIONS. UNLISTED DUCT TAPE IS NOT PERMITTED TO SEAL ANY METALLIC DUCT. ALL RIGID METALLIC AND FLEXIBLE METALLIC OR NONMETALLIC AIR DUCTS SHALL BE INSULATED AS NOTED, SEE DUCTWORK NOTES.
5. PIPE CONDENSATE DRAIN WITH TRAP AS REQUIRED BY THE EQUIPMENT MANUFACTURER. CONDENSATE FROM ALL FUEL FIRED APPLIANCES SHALL BE PIPED TO AN APPROVED PLUMBING FIXTURE OR SAFE WASTE DRAIN. CONDENSATE FROM COOLING COIL SHALL BE PIPED FROM THE DRAIN PAN OUTLET TO AN APPROVED LOCATION. SLOPE ALL CONDENSATE DRAINS AT 1% MINIMUM. CONDENSATE PIPING SHALL BE 3/4" (I.D.) MINIMUM, MATERIALS AND WORK PER OMC SECTION 307.2.1. A SECONDARY DRAIN AND / OR AUXILIARY DRAIN PAN IS REQUIRED FOR EACH COOLING COIL OR FUEL FIRED APPLIANCE WHERE DAMAGE MAY OCCUR TO THE BUILDING COMPONENTS DUE TO STOPPAGE FROM THE EQUIPMENT DRAIN PAN OR CONDENSATE DRAIN PIPING. AUXILIARY AND SECONDARY DRAIN SYSTEMS SHALL COMPLY WITH THE APPLICABLE REQUIREMENTS OF THE OMC SECTION 307.2.3. WHERE REQUIRED BY LOCAL CODE, PROVIDE WATER LEVEL DETECTION DEVICE CONFORMING WITH UL 508.
6. PLACEMENT OF HVAC EQUIPMENT AND VIBRATION ISOLATION IS THE RESPONSIBILITY OF THE HVAC CONTRACTOR. COORDINATE LOCATIONS AND LAYOUT WITH ALL RELATED SUBCONTRACTORS AND THE GENERAL CONTRACTOR. THE HVAC CONTRACTOR SHALL PROVIDE ALL HANGERS, BLOCKING, SUPPORTING ANGLES AND EXTRA SUPPORT FOR HVAC UNITS, FANS, EQUIPMENT, DUCTWORK, ETC. THE HVAC CONTRACTOR SHALL COORDINATE WITH GENERAL CONTRACTOR.
7. HVAC CONTRACTOR SHALL PROVIDE (3) SETS OF OPERATION AND MAINTENANCE MANUALS AND AS-BUILT DRAWINGS. ALL FINAL INSPECTION ITEMS MADE BY THE OWNER'S REPRESENTATIVE OR THE BUILDING AUTHORITY SHALL BE PERFORMED BY THE HVAC CONTRACTOR AT NO ADDITIONAL EXPENSE TO THE OWNER.
8. ALL SHEET METAL DUCTWORK DIMENSIONS AND LOCATIONS SHALL BE FIELD VERIFIED PRIOR TO FABRICATION.
9. HVAC CONTRACTOR SHALL SUPPLY AND INSTALL NEW EQUIPMENT FILTER(S) AT THE END OF THE CONSTRUCTION PERIOD.
10. HVAC CONTRACTOR SHALL CHARGE REFRIGERATION EQUIPMENT AS REQUIRED AND TEST ALL DUCTWORK AND PIPING SYSTEMS FOR LEAKAGE. ALL LEAKS SHALL BE REPAIRED BY EITHER REPLACING OR REPAIRING THE DEFECTIVE MATERIAL OR EQUIPMENT AT THE DISCRETION OF THE OWNER. HVAC CONTRACTOR SHALL PERFORM EQUIPMENT SET-UP, ADJUST CONTROLS, BALANCE, ADJUST AND TEST ALL AIR MOVING EQUIPMENT, AIR DISTRIBUTION DUCTWORK AND AIR CONTROL DEVICES FOR THE ENTIRE PROJECT. TESTING AND BALANCING SHALL BE PERFORMED PER NEBB OR AABC STANDARDS. ALL WORK SHALL BE PERFORMED IN ACCORDANCE WITH THESE ORGANIZATIONS PUBLISHED PROCEDURE MANUALS. THE HVAC CONTRACTOR SHALL SUBMIT (3) FINAL CERTIFIED COPIES OF THE AIR BALANCE REPORT TO THE OWNER. THE HVAC CONTRACTOR SHALL PERFORM HVAC EQUIPMENT STARTUP AND PROVIDE WRITTEN CERTIFICATION TO THE OWNER ALONG WITH THE BALANCING REPORT, CERTIFYING THAT THE HVAC EQUIPMENT IS INSTALLED PROPERLY IN ACCORDANCE WITH THE MANUFACTURERS REQUIREMENTS. IMPROPERLY INSTALLED EQUIPMENT SHALL BE CORRECTED, REPAIRED OR REPLACED AS REQUIRED AT THE HVAC CONTRACTOR'S EXPENSE. HVAC CONTRACTOR SHALL INSTRUCT THE OWNER IN THE OPERATION OF THE HVAC SYSTEM AFTER ALL TESTING AND BALANCING HAS BEEN ACCOMPLISHED.
11. HVAC CONTRACTOR SHALL REPAIR, REPLACE AND REFINISH TO MATCH EXISTING ALL SURFACES THAT ARE DAMAGED BY HVAC WORK DURING INSTALLATION. PAINT ALL VISIBLE PIPING ON THE EXTERIOR OF THE BUILDING TO MATCH BUILDING. THE HVAC CONTRACTOR SHALL CLEAN ALL EQUIPMENT, DIFFUSERS, GRILLES AND OTHER EXPOSED WORK. ADJUST ALL EQUIPMENT AND AUTOMATIC CONTROL DEVICES FOR QUIET AND PROPER OPERATION.
12. THE HVAC CONTRACTOR SHALL GUARANTEE THE ENTIRE HVAC SYSTEM UNCONDITIONALLY FOR A PERIOD OF 1 YEAR FROM THE DATE OF FINAL ACCEPTANCE BY THE OWNER. ALL REFRIGERATION COMPRESSORS SHALL HAVE AN EXTENDED WARRANTY OF AN ADDITIONAL FOUR YEARS. ALL GUARANTEES SHALL BE WRITTEN, DATED AND FORWARDED DIRECTLY TO THE OWNER. ALL OF THE DEFECTIVE EQUIPMENT AND/OR MATERIAL SHALL BE REPLACED BY QUALIFIED PERSONNEL AT NO EXPENSE TO THE OWNER.
13. HVAC EQUIPMENT POWER WIRING SHALL BE PERFORMED BY THE ELECTRICAL CONTRACTOR. HVAC CONTRACTOR SHALL FURNISH COMPONENTS I.E. MOTOR STARTERS, RELAYS, ETC. HVAC CONTRACTOR SHALL PROVIDE ALL CONTROLS AND PERFORM CONTROL WIRING FOR ALL HVAC EQUIPMENT. CONTROLS SHALL BE AS REQUIRED THE EQUIPMENT MANUFACTURER, AS SHOWN ON THE HVAC PLANS AND IN ACCORDANCE WITH THE ENERGY CONSERVATION CODE. ALL CONTROL WIRING SHALL BE INSTALLED PER N.E.C. REQUIREMENTS. ELECTRICAL CONTRACTOR SHALL MAKE FINAL CONNECTION TO EQUIPMENT. HVAC CONTRACTOR SHALL INSTALL ALL DEVICES AND THE ELECTRICAL CONTRACTOR SHALL PROVIDE POWER WIRING AND CONNECTION AS REQUIRED.
14. HVAC EQUIPMENT TO BE INSTALLED AS REQUIRED BY THE TERMS OF THEIR APPROVAL, IN ACCORDANCE WITH THE CONDITIONS OF THE LISTING, THE MANUFACTURER'S WRITTEN INSTALLATION INSTRUCTIONS, SPECIFICATIONS, PROPER ENGINEERING PRACTICES AND APPLICABLE CODE(S). THE MANUFACTURER'S INSTALLATION INSTRUCTIONS SHALL BE AVAILABLE ON THE JOB SITE AT THE TIME OF INSPECTION.
15. HVAC CONTRACTOR SHALL REMOVE FROM THE JOB SITE AND DISPOSE OF ANY MATERIALS NOT ECONOMICALLY RECOVERABLE AND CREDIT THE OWNER FOR ANY MATERIALS SOLD FOR SALVAGE.
16. HVAC EQUIPMENT AND ACCESSORIES AS SPECIFIED OR DESCRIBED. THE USE OF ALTERNATES REQUIRES THAT SAMPLES OR CATALOG CUTS SHALL BE SUBMITTED AND APPROVED BY THE OWNER'S REPRESENTATIVE. INFORMATION DESCRIBED IS USED TO SET A MINIMUM PERFORMANCE LEVEL AND IS BASED ON THE LATEST INFORMATION ATTAINABLE. MANUFACTURERS MAY CHANGE PRODUCTS WITHOUT NOTICE, VERIFY SUITABILITY AND PERFORMANCE PRIOR TO ORDERING FROM VENDORS.
17. ROOF OR WALL FLASHING AND COUNTER FLASHING FOR DUCTS, PIPING AND HVAC EQUIPMENT SHALL BE SUPPLIED BY THE HVAC CONTRACTOR. ALL CUTTING, PATCHING AND FLASHING INSTALLATION IN THE ROOF OR THE EXTERIOR WALL SHALL BE PERFORMED BY AN OWNER APPROVED CONTRACTOR AT THE HVAC CONTRACTOR'S DIRECT EXPENSE. HVAC CONTRACTOR SHALL COORDINATE WITH THE RESPECTIVE SUBCONTRACTORS AND THE GENERAL CONTRACTOR PRIOR TO BID.
18. REFRIGERANT PIPING FOR HVAC EQUIPMENT SHALL BE PRECHARGED TYPE AS SUPPLIED BY THE EQUIPMENT MANUFACTURER, PROPERLY SIZED AND INSULATED OR FIELD FABRICATED AT HVAC CONTRACTOR'S OPTION. ALL FIELD FABRICATED REFRIGERANT PIPING SHALL BE TYPE "L" A.R.I. COPPER, SOLDERED WITH 95/5 SOLDER, INSULATED WITH 1" ARMAFLEX AND PROPERLY WEATHER PROOFED WHERE REQUIRED. PIPING LAYOUT AND WORKMANSHIP SHALL BE IN ACCORDANCE WITH THE EQUIPMENT MANUFACTURER'S WRITTEN INSTRUCTIONS AND SHALL INCLUDE SIGHT GLASSES, SERVICE VALVES, AND FILTER DRYERS WITH BY-PASS AND ALL ACCESSORIES REQUIRED BY THE EQUIPMENT MANUFACTURER FOR PROPER EQUIPMENT OPERATION. ALL PIPING SHALL BE APPROVED BY THE EQUIPMENT MANUFACTURER AND THE OWNER'S REPRESENTATIVE PRIOR TO INSTALLATION.
19. HVAC VALVES AND PIPING SPECIALTIES TO BE LINE SIZED UNLESS NOTED OTHERWISE. USE ECCENTRIC REDUCERS ON CONTROL VALVES WHERE REQUIRED. HVAC PIPING INSULATION SHALL RUN CONTINUOUSLY THROUGH NON FIRE RESISTANT RATED FLOOR, WALLS, AND PARTITIONS. ALL PIPING SHALL BE SUPPORTED ADJACENT TO EQUIPMENT, TO PREVENT WEIGHT OF PIPING BEING PLACED ON EQUIPMENT. SUSPEND PIPING FROM STRUCTURAL MEMBERS ONLY AND NOT THE ROOF DECK OR CEILING SYSTEM.

NOTES TO ROUND DUCT HANGING DETAIL

1. DETAIL IS THE SAME FOR SUPPLY AND RETURN AIR BRANCH DUCTS AND SIMILAR FOR FLEXIBLE AIR CONNECTORS. FLEXIBLE AIR CONNECTORS SHALL BE LIMITED IN LENGTH TO 14'.
2. DUCTWORK AND ACCESSORIES SHALL BE SUSPENDED FROM THE ROOF AND FLOOR STRUCTURAL MEMBERS AND NOT THE FLOOR DECK, ROOF DECK, PIPING OR THE CEILING SYSTEM. PROVIDE ALL HANGERS, BLOCKING AND SUPPORTS REQUIRED.

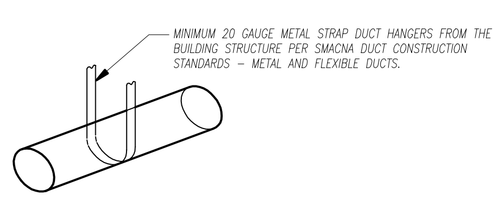

ROUND DUCT HANGING DETAIL

SCALE: NONE

DUCT WORK NOTES

1. THE HVAC CONTRACTOR IS TO TEST AND BALANCE THE HVAC SYSTEM TO BOTH THE DESIGN STANDARDS AND REASONABLE COMFORT LEVEL FOR THE OCCUPANTS.
2. HVAC CONTRACTOR SHALL COORDINATE DUCTWORK WITH THE FIELD CONDITIONS. PROVIDE OFFSETS, BENDS, TRANSITIONS AND SPECIAL FITTINGS FOR A COMPLETE, PROPERLY FUNCTIONING SYSTEM AT NO ADDITIONAL COST TO THE OWNER. IMPROPERLY INSTALLED DUCTWORK WITH UNNECESSARY FITTINGS, TRANSITIONS, BENDS OR OFFSETS DUE TO INAPPROPRIATE COORDINATION WILL BE REWORKED BY THE HVAC CONTRACTOR AT NO ADDITIONAL COST TO THE OWNER.
3. DUCTWORK SHALL BE SUSPENDED FROM THE STRUCTURAL MEMBERS AND NOT BE SUSPENDED FROM OR FASTENED TO THE ROOF DECK, FLOOR DECK OR THE CEILING SYSTEM
4. DUCTWORK SHALL BE FABRICATED, ASSEMBLED AND INSTALLED IN ACCORDANCE WITH THE DESIGN CRITERIA SET FORTH IN THE OHIO RESIDENTIAL CODE (CHAPTER 16) AND ACCA MANUAL D AS THE MINIMUM CRITERIA AND PER THE MANUFACTURER'S WRITTEN RECOMMENDATIONS WHICHEVER IS MORE STRINGENT.
5. HVAC CONTRACTOR TO MAKE FLEX DUCT CONNECTIONS TO EACH INDIVIDUAL AIR DEVICE AS REQUIRED TO ALIGN AIR DEVICES WITH CEILING SYSTEM (WHERE REQUIRED). SEE SPECIFICATIONS REGARDING FLEX DUCT.
6. HVAC CONTRACTOR TO PROVIDE MANUAL BALANCING DAMPERS (WITH LOCKING QUADRANT) IN DUCTWORK TO ALL DUCTED AIR DEVICES. PROVIDE ALL ADDITIONAL DAMPERS IN DUCTWORK TO BALANCE THE SYSTEM TO THE DESIGN VALUES SHOWN.
7. DUCTWORK SHALL BE OF THE SIZE AS INDICATED ON THE PLANS WITH EXTERNAL INSULATION PROVIDED ON ALL SUPPLY AND RETURN DUCTWORK. INSULATION ON RECTANGULAR DUCTWORK TO BE 1" THICK (MINIMUM) 1-1/2 PCF FIBERGLASS WITH VAPOR BARRIER JACKET. ROUND DUCTWORK, BOTH METAL AND FLEXIBLE, TO BE INSULATED WITH 1" THICK (MINIMUM) 1-1/2 PCF FIBERGLASS INSULATION WITH VAPOR BARRIER. DUCTWORK SIZES INDICATED ARE NET SIZES. ALL DUCT INSULATION SHALL CONFORM TO THE OHIO RESIDENTIAL CODE, CHAPTER 16 SECTION M1601.2.1 AND THE INTERNATIONAL ENERGY CONSERVATION CODE. SUPPLY DUCTS LOCATED OUTSIDE THE BUILDING, IN UNCONDITIONED ATTICS AND IN UNCONDITIONED SPACES SHALL BE INSULATED WITH R-8 INSULATION. RETURN AIR DUCTS LOCATED OUTSIDE OF THE BUILDING OR IN UNCONDITIONED ATTICS SHALL BE INSULATED WITH A MINIMUM OF R-4 INSULATION. RETURN DUCTS IN UNCONDITIONED SPACES SHALL BE INSULATED WITH R-2 INSULATION. INSULATED DUCTS OUTSIDE OF THE BUILDING SHALL BE WRAPPED WITH A WEATHERPROOF BARRIER.
8. HVAC RELATED INSULATION TO BE APPLIED BY EXPERIENCED PERSONNEL IN ACCORD WITH THE BEST TRADE PRACTICES AND THE MANUFACTURER'S PRINTED INSTALLATION DIRECTIONS
9. HVAC RELATED INSULATION, JACKETS, OR FACINGS, AND ADHESIVES USED TO ADHERE JACKET OR FACING TO THE INSULATION, INCLUDING FITTINGS AND BUTT STRIPS, SHALL HAVE A NON-COMBUSTIBLE FIRE AND SMOKE HAZARD SYSTEM RATING AND LABEL AS TESTED BY ASTM E-84, NFPA 255 AND UL 723 NOT EXCEEDING FLAME SPREAD 25, SMOKE DEVELOPED 50

DEMOLITION NOTES

1. HVAC CONTRACTOR SHALL REMOVE FROM THE SITE AND PROPERLY DISPOSE OF ALL DEMOLITION ITEMS AND MATERIALS NOT NOTED TO BE SALVAGED OR REUSED.
2. HVAC CONTRACTOR SHALL FIELD VERIFY ALL CONDITIONS AND DIMENSIONS SHOWN FOLLOWING DEMOLITION. ALL SIGNIFICANT VARIATIONS MUST BE REPORTED TO THE OWNER'S REPRESENTATIVE.
3. DEMOLITION WORK SHALL BE CARRIED OUT IN A MANNER WHICH IS SAFE AND NON-INTERFERRING WITH ADJACENT SPACES, OVERALL USE OF BUILDING OR SUBCONTRACTORS WORK. DEMOLITION WORK SHALL BE PERFORMED AT TIMES APPROVED BY THE OWNER.
4. REMOVE EXISTING GAS FIRED FURNACE, ALL HVAC EQUIPMENT, DUCTWORK, HANGERS, DIFFUSERS, GRILLES AND ACCESSORIES AS NOTED ON THE PLANS OR REQUIRED FOR THE RENOVATION. WHERE HVAC EQUIPMENT IS REMOVED IN WALLS OR CEILINGS TO REMAIN, HVAC CONTRACTOR SHALL REPAIR TO MATCH EXISTING CONDITIONS. REMOVE ALL CONTROLS, VENTS AND GAS PIPING CONNECTIONS AS APPLICABLE. COORDINATE DEMOLITION WITH THE PLUMBING AND ELECTRICAL CONTRACTORS. PATCH THE EXISTING ROOF TO MATCH EXISTING CONDITIONS. HVAC CONTRACTOR SHALL USE AN APPROVED ROOFING CONTRACTOR.
5. THE OWNER MAY REQUEST SOME ITEMS BE SALVAGED FOR FUTURE RE-USE. ITEMS TO BE DISPOSED OF SHALL BE REMOVED FROM THE PREMISES BY THE HVAC CONTRACTOR.
6. COORDINATE DEMOLITION WITH EXISTING UTILITIES INCLUDING WATER PIPING, DRAIN LINES AND ELECTRICAL CONDUITS.
7. ALL ITEMS NOT SHOWN OR NOTED TO BE REMOVED ARE TO REMAIN.
8. THE HVAC CONTRACTOR SHALL COMPLETE ALL DEMOLITION REQUIRED IN ORDER TO PROVIDE A COMPLETE PROJECT AS SHOWN ON THE DRAWINGS AND AS DESCRIBED IN THE DRAWING NOTES.
9. SEE THE ARCHITECTURAL DRAWINGS FOR ADDITIONAL INFORMATION. COORDINATE WITH THE GENERAL CONTRACTOR SO THAT HVAC EQUIPMENT TO REMAIN IS NOT REMOVED OR DAMAGED DURING DEMOLITION BY OTHERS.

NOTES TO DUCT TAKE-OFF DETAIL

1. FLEXIBLE AIR DUCT OFFSETS ARE NOT TO EXCEED 30 DEGREES AND SHALL BE GRADUAL. OFFSETS IN EXCESS OF 30 DEGREES SHALL BE HARD DUCTED. A GRADUAL 90 DEGREE OFFSET SHALL BE PERMITTED WHERE THE SPACE IS AVAILABLE AND THE AIR VELOCITY IS UNDER 500 FPM.
2. FLEXIBLE AIR DUCT SHALL NOT HAVE MORE THAN 1/2" SAG PER FOOT. FLEXIBLE AIR DUCT MUST BE USED FOR THE FINAL CONNECTION TO ALL CEILING MOUNTED AIR DEVICES, BUT SHALL NOT BE LIMITED IN LENGTH WHERE PERMITTED BY LOCAL CODE.
3. DUCT TAKE-OFF DETAIL IS THE SAME FOR SUPPLY AND RETURN AIR BRANCH DUCTS.
4. DUCTWORK AND ACCESSORIES SHALL BE SUSPENDED FROM THE ROOF JOISTS OR STRUCTURAL MEMBERS AND NOT THE ROOF DECK, FLOOR DECK, PIPING OR THE CEILING SYSTEM. PROVIDE ALL HANGERS, BLOCKING AND SUPPORTS REQUIRED.

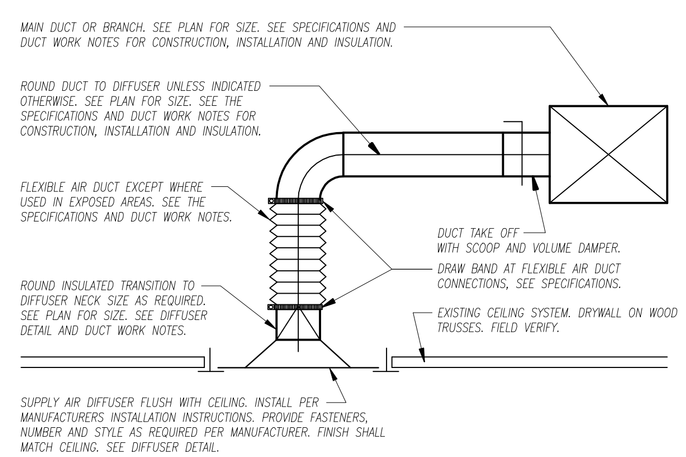

DUCT TAKE-OFF DETAIL

NOT TO SCALE

NOTES TO VENT THRU ROOF DETAIL

1. ROOFING SYSTEM MAY VARY. COORDINATE WITH THE ARCHITECTURAL DRAWINGS AND THE ROOFING CONTRACTOR. FLASHING SHALL BE AS REQUIRED BY ROOF SYSTEM MANUFACTURER AND INSTALLER. WORK DONE BY THE HVAC CONTRACTOR SHALL NOT VOID THE WARRANTY OF THE ROOFING SYSTEM. THE HVAC CONTRACTOR SHALL USE AN OWNER APPROVED ROOFING CONTRACTOR.
2. ANY VENT THAT IS WITHIN 10' OF ANY INTAKE OR EXHAUST OPENING SHALL EXTEND NOT LESS THAN 3' ABOVE THE INTAKE OR EXHAUST OPENING. CONCENTRIC FURNACE VENT MAY BE OFFSET BELOW ROOF 10' MINIMUM FROM ANY INTAKE OR EXHAUST OPENING. FOLLOW THE MANUFACTURER'S WRITTEN INSTALLATION INSTRUCTIONS.

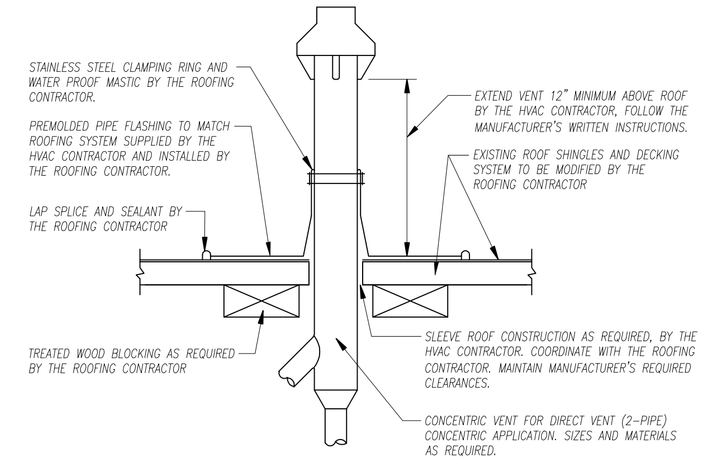

CONCENTRIC FURNACE VENT THRU ROOF DETAIL

SCALE: NONE

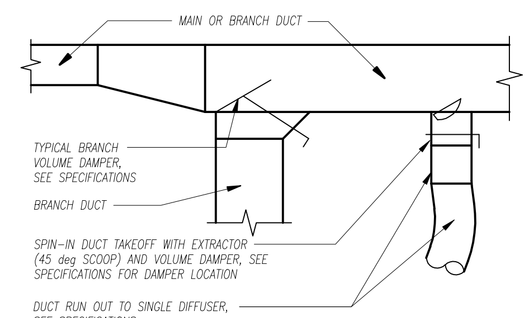

DUCT WORK DETAILS

SCALE: NONE

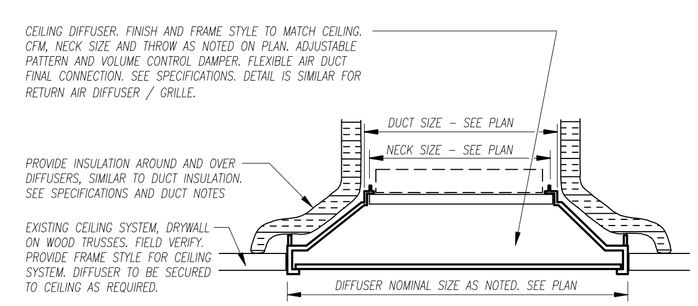

SUPPLY AIR DIFFUSER DETAIL

NOT TO SCALE

NOTE:
ALL DUCTWORK AND ACCESSORIES (WHERE SUSPENDED) SHALL BE SUSPENDED FROM THE ROOF JOISTS OR STRUCTURAL MEMBERS AND NOT THE ROOF DECK, PIPING OR THE CEILING SYSTEM. PROVIDE ALL HANGERS, BLOCKING AND SUPPORTS REQUIRED.

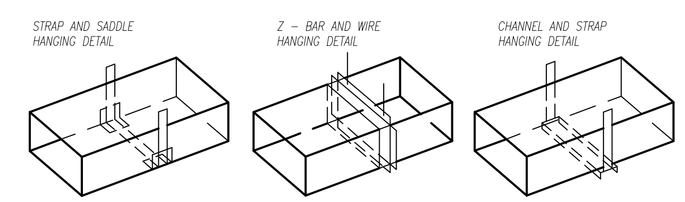

RECTANGULAR DUCT HANGING DETAILS

SCALE: NONE

#	REVISED	BY

SEXTON ASSOCIATES ARCHITECTS, inc.
611 HOUSEL CRAFT RD CORTLAND, OH 44410
PH 330-889-0065 FAX 330-889-0065

Documents prepared by the Architect for this project are instruments of the Architect's services for use solely with respect to this Project. The Architect shall retain all common law, statutory and other reserved rights, including the copyright. The Owner shall not reuse or permit the reuse of the Architect' documents except by mutual agreement in writing and with appropriate compensation to the Architect. Submission or distribution of documents to meet official regulatory requirements or for similar purposes in connection with this Project is not to be construed as publication in derogation of the Architect's reserved rights.

PROJECT
ALTERATIONS TO
PASADENA AVE
ELYRIA, OH 44035

SEAL

Timothy J. Sexton License #12352
Expiration Date 12/31/2013

DRAWN BY	ORIGINAL PRINT DATE
RJ	7/6/2012
CHECKED BY	SCALE
TS	AS NOTED

JOB NO.
2012-10-205-14

SHEET
M2

SHEET 6 OF 8