GENERAL SHEET NOTES:

1. SEE DRAWING E-001 AND E-002 FOR GENERAL NOTES, SYMBOLS AND ABBREVIATIONS.
2. ALL CIRCUITS SHOWN, U.O.N., SHALL BE CIRCUITED TO PANEL GAB.

SHEET KEYNOTES:

1. THE PREFABRICATED AUDIO BOOTHS ARE TO BE SUPPLIED WITH INTEGRAL RECEPTACLES, AND PHONE/DATA OUTLETS. CONTRACTOR SHALL REFER TO MANUFACTURER'S RECOMMENDATIONS AND PROVIDE ALL REQUIRED RACEWAY AND CONDUCTORS TO SUPPLY POWER AND PHONE/DATA TO THE AUDIO BOOTHS.
2. JUNCTION BOX IN CEILING. ANY EXISTING CIRCUITS, FROM RELOCATED PANEL GAB NOT ABLE TO BE DEMOLISHED DUE TO CIRCUIT EXTENDING OUTSIDE OF AREA OF WORK, SHALL BE SPLICED AND EXTENDED TO NEW LOCATION OF PANEL.
3. CONTRACTOR SHALL RELOCATE THE EXISTING DDC PANELS AND VFD AS SHOWN ON DRAWINGS. CONTRACTOR SHALL PROVIDE ANY REQUIRED SPLICES, FEEDERS, AND RACEWAY AS REQUIRED TO INSTALL THE DDC PANELS AND VFD IN THE NEW LOCATION.
4. CONTRACTOR SHALL DEMOLISH CIRCUIT FEEDING EXAM BOOTHS BACK TO SOURCE.
5. INSTALL RECEPTACLE ABOVE CEILING MOUNTED NEXT TO CHILLED BEAM FOR LOW PROFILE CONDENSATE PUMP. COORDINATE EXACT LOCATION AND QUANTITY WITH MECHANICAL DRAWINGS.
6. APPROXIMATE LOCATION OF RISER FOR PANEL GAB ON GROUND FLOOR. CONTRACTOR TO TAP INTO RISER AND PROVIDE NEW ENCLOSED CIRCUIT BREAKER AS SHOWN. ROUTE NEW FEEDERS AND CONDUIT THROUGH CORRIDOR AND LOCKER ROOM ABOVE THE BASEMENT CEILING TO NEW PANEL GAB LOCATED IN ELECTRICAL ROOM ON GROUND FLOOR. REMOVE AND REPLACE CEILINGS AS NECESSARY TO ACCOMMODATE WORK.
7. NEW PANEL GAB ABOVE. ROUTE NEW FEEDERS AND CONDUIT FROM ENCLOSED CIRCUIT BREAKER THROUGH CORRIDOR AND LOCKER ROOM ABOVE THE BASEMENT CEILING TO NEW PANEL GAB LOCATED IN ELECTRICAL ROOM ON GROUND FLOOR.

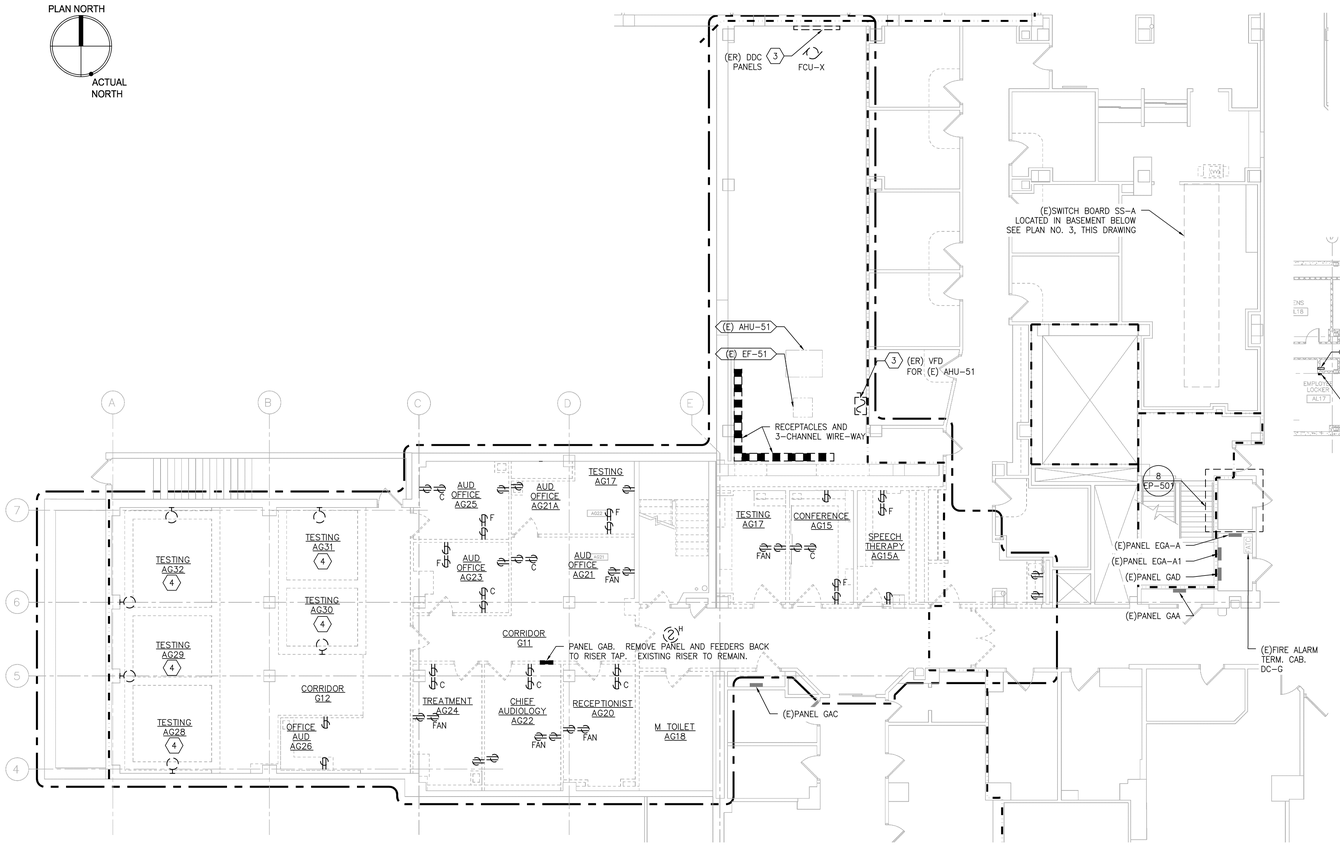

1 ELECTRICAL POWER DEMOLITION PLAN
SCALE: 1/8" = 1'-0"

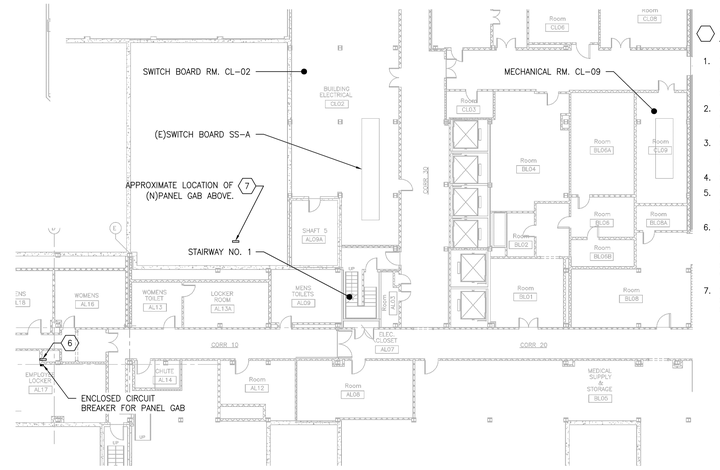

3 ELECTRICAL PLAN – BASEMENT
SCALE: 1/16" = 1'-0"

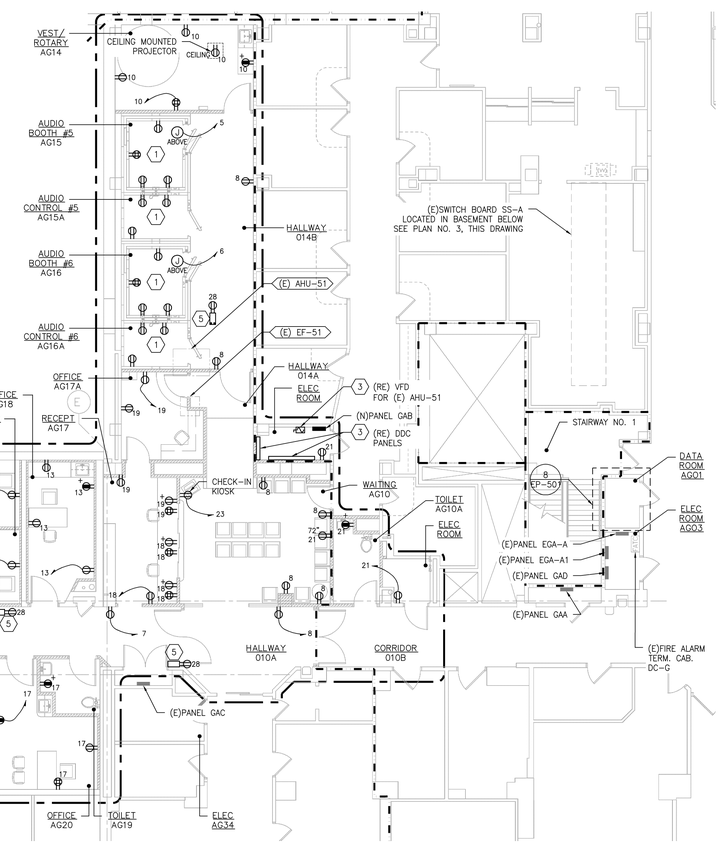

2 ELECTRICAL POWER PLAN
SCALE: 1/8" = 1'-0"

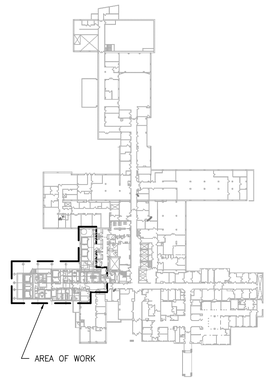

KEY PLAN – GROUND FLOOR
SCALE: NONE

100% CONTRACT DOCUMENTS
FULLY SPRINKLERED

Revisions	Date

Miller-Remick LLC
M.E.P. & Structural Engineering
A Service Disabled Veteran Owned Small Business
1010 KINGS HIGHWAY SOUTH
CHERRY HILL, NEW JERSEY 08034
PHONE: (856)429-4000
FAX: (856)429-5002
SDVOSB

GARDNER PLUS
ARCHITECTS, PLLC
40 WILDBRIAR ROAD
ROCHESTER, NEW YORK 14623
TELEPHONE: (585) 321.1210
FACSIMILE: (585) 321.1213
www.gardnerplus.com

MILLER-REMICK CORPORATION
PROFESSIONAL ENGINEER
THOMAS L. CHAPMAN, P.E.
NEW YORK LICENSE NO. 078145-1

Reviewed: Facility Manager
Reviewed: Facility Director
Reviewed:
Reviewed:

Drawing Title: POWER GROUND FLOOR DEMOLITION AND NEW WORK PLANS

Approved: Project Director

Project Title: AUDIOLOGY LAB RENOVATION

Building Number: NO. 1
Checked: BEAVER
Drawn: READ
Location: VAMC SYRACUSE, NY

Date: 05-19-2014
Project No.: 528A7-13-750
DRAWING NO.: EP-101
Dwg. 38 Of 46

VA HEALTHCARE NETWORK UPSTATE NEW YORK
Department of Veterans Affairs

VA FORM 08-6231

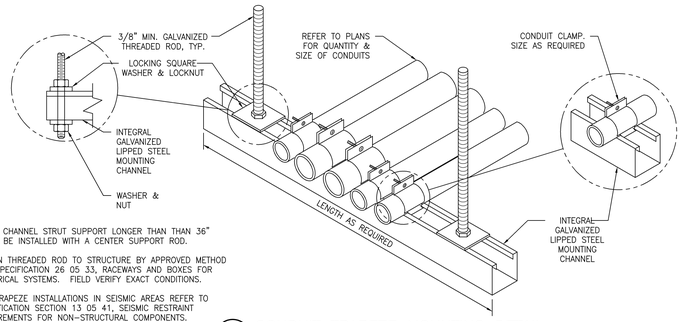

NOTES
1. METAL CHANNEL STRUT SUPPORT LONGER THAN THAN 36" SHALL BE INSTALLED WITH A CENTER SUPPORT ROD.
2. FASTEN THREADED ROD TO STRUCTURE BY APPROVED METHOD PER SPECIFICATION 26 05 33, RACEWAYS AND BOXES FOR ELECTRICAL SYSTEMS. FIELD VERIFY EXACT CONDITIONS.
3. FOR TRAPEZE INSTALLATIONS IN SEISMIC AREAS REFER TO SPECIFICATION SECTION 13 05 41, SEISMIC RESTRAINT REQUIREMENTS FOR NON-STRUCTURAL COMPONENTS.

1 CONDUIT TRAPEZE MOUNTING DETAIL
SCALE: NONE
REFDWG

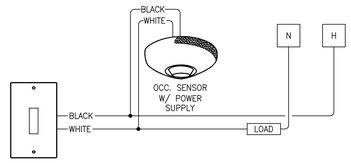

2 TYPICAL OCCUPANCY SENSOR SWITCH WIRING DETAIL
SCALE:

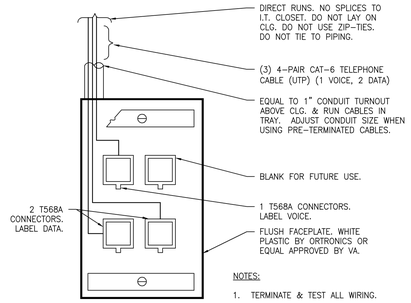

NOTES:
1. TERMINATE & TEST ALL WIRING.

3 TYPICAL TELE/DATA OUTLET DETAIL
SCALE: NO SCALE

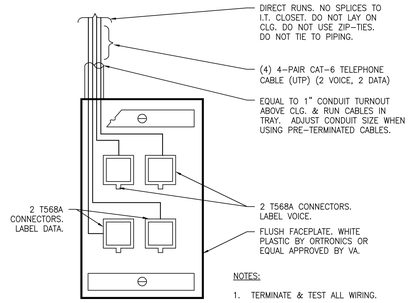

NOTES:
1. TERMINATE & TEST ALL WIRING.

4 TYPICAL TELE/DATA OUTLET DETAIL FOR BOOTHS
SCALE: NO SCALE

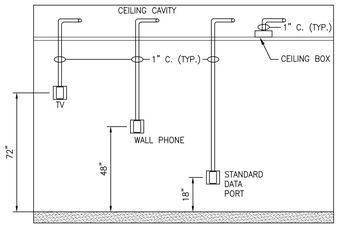

STATION CONDUIT NOTES:
1. ALL BOXES SHALL BE DOUBLE GANG WITH REDUCING MUDRING FOR MOUNTING OF SINGLE GANG FACEPLATE.
2. ALL CONDUIT AND BOXES TO BE INSTALLED WITHIN SHEETROCK OR BLOCK WALLS. NO SURFACE MOUNTING OF CONDUIT.
3. COORDINATE TV MONITOR MOUNTING HEIGHTS WITH COR.

5 TYPICAL TELE/DATA DROP DETAIL
SCALE: NO SCALE

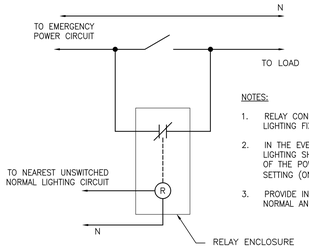

NOTES:
1. RELAY CONFIGURATION SHALL ALLOW SWITCHING OF EMERGENCY LIGHTING FIXTURES.
2. IN THE EVENT OF A LOSS OF NORMAL POWER, THE EMERGENCY LIGHTING SHALL BE SHUNTED ON AUTOMATICALLY FOR THE DURATION OF THE POWER OUTAGE. LIGHTING SHALL RETURN TO ITS LAST SETTING (ON OR OFF) UPON RESTORATION OF NORMAL POWER.
3. PROVIDE IN NEMA 1 ENCLOSURE WITH STEEL BARRIER TO SEPARATE NORMAL AND EMERGENCY POWER.

6 EMERGENCY LIGHTING FIXTURE SWITCHING CONTROL SCHEMATIC
SCALE: NOT TO SCALE

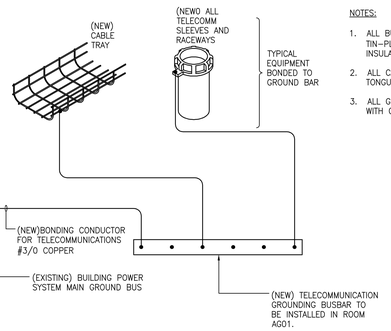

NOTES:
1. ALL BUSBARS SHALL BE 1/4" X 4" X 24" PRE-DRILLED TIN-PLATED COPPER. MOUNT ON WALL WITH 2" STANDOFF INSULATORS.
2. ALL CABLE CONNECTIONS TO GROUND BAR SHALL BE TWO HOLE TONGUE COMPRESSION LUGS.
3. ALL GROUNDING CONDUCTORS SHALL BE COPPER CONDUCTORS WITH GREEN INSULATION OR DISTINCTIVE GREEN MARKING.

7 TELECOMM AND DATA GROUND DIAGRAM
SCALE: SCHEMATIC

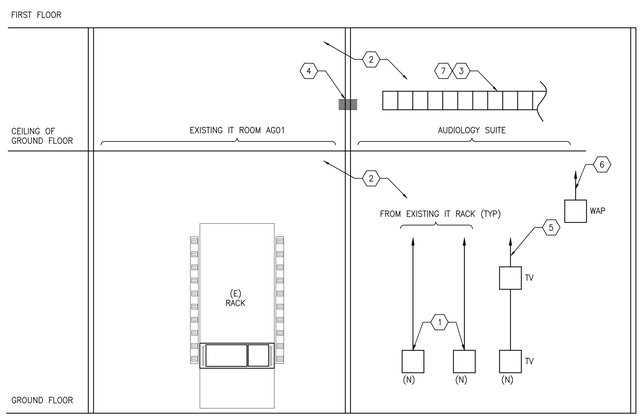

8 TELECOMMUNICATIONS WIRING SCHEMATIC DIAGRAM
SCALE: NONE

DETAIL KEYNOTES:

1. ALL NEW VOICE AND DATA JACKS SHALL BE CATEGORY 6-COMPLIANT EIGHT POSITION RJ-45 NON-KEYED (EIA/TIA 568A).

   ALL NEW OUTLETS SHALL BE QUADUPLEX JACKS WITH QUADUPLEX FLUSH MOUNTED FACEPLATE. REFER TO DETAILS 3 & 4 /EP501 FOR EXACT CONFIGURATION.
   THE JACK FOR DATA SHALL BE A DIFFERENT COLOR TO DISTINGUISH IT FROM THE JACK FOR VOICE. CATEGORY 6 WIRING SHALL BE INSTALLED FROM EACH JACK TO RACK AND SHALL BE OF A TYPE DESIGNED TO SUPPORT LEVEL FIVE DATA COMMUNICATION (NOT LESS THAN 1000MHz/Mpbs).
2. PRIOR TO ANY WORK, E.C. TO PERFORM A WALK THROUGH WITH THE FACILITY SERVICE PROJECT LEAD AND CHIEF NETWORK OPERATIONS PERSONNEL TO INSPECT THE ROUTE, QUANTITY, AVAILABLE CABLE SLACK, AND EXACT LOCATION DATA DROPS. MAKE ADJUSTMENTS TO THE INSTALLATION TO SUIT FIELD CONDITIONS.
3. E.C. TO PROVIDE AND INSTALL A METALLIC BASKET TYPE CABLE TRAY 4"H. REFER TO DRAWINGS EY-101 FOR LOCATION AND TRAY WIDTH. COORDINATE LOCATION WITH OTHER TRADES PRIOR TO INSTALLATION. CABLE TRAY SUPPORTS SHALL COMPLY WITH NEC-392, NEMA V1 AND NEMA FG1 STANDARDS.

   E.C. TO COORDINATE ELEVATION OF CABLE TRAY WITH NEW CEILING LAYOUT.
4. FIRE PILLOW BLOCKS AT CMU WALL WHERE 4" SLEEVE ENTERS IT ROOM OR CROSS SMOKE ZONES.
5. PROVIDE COAX CABLE BACK TO EXISTING MATV CABINET.
6. COORDINATE LOCATION AND INSTALLATION OF WIRELESS ACCESS POINT WITH IT VA DEPARTMENT.
7. REFER TO DETAIL 7/EP501 FOR CABLE TRAY GROUNDING.

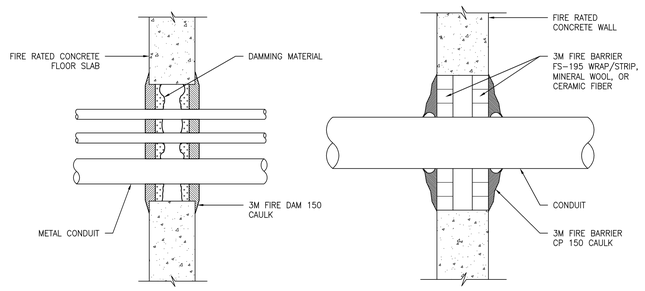

NOTES:
1. A 1" MIN. THICKNESS OF 3M FIRE DAM 150 CAULK IS TO BE INSTALLED AROUND THE CONDUIT ON BOTH SIDES OF THE WALL. AN ADDITIONAL 1/4" BEAD SHALL BE PLACED AROUND THE PERIMETER OF THE OPENING OVERLAPPING THE WALL 1/4" MIN.
2. A 1-1/2" MIN. THICKNESS OF MINERAL WOOL DAMMING OR CERAMIC FIBER INSULATION IS REQUIRED IN THE PENETRATION AROUND THE CONDUIT & RECESSED 2" MIN. FROM EACH SIDE OF THE WALL.
3. A 1" MIN. CLEARANCE IS REQUIRED BETWEEN ADJACENT CONDUIT & THE PERIMETER THROUGH THE OPENING.
4. THESE RECOMMENDATIONS ARE BASED ON PRODUCT PERFORMANCE PER ASTM E-814 (UL 1479) FIRE TEST & UL THROUGH-PENETRATION FIRE STOP SYSTEM #170.

9 PENETRATION FIRE STOP FOR CONDUIT THROUGH CONCRETE
SCALE: NONE

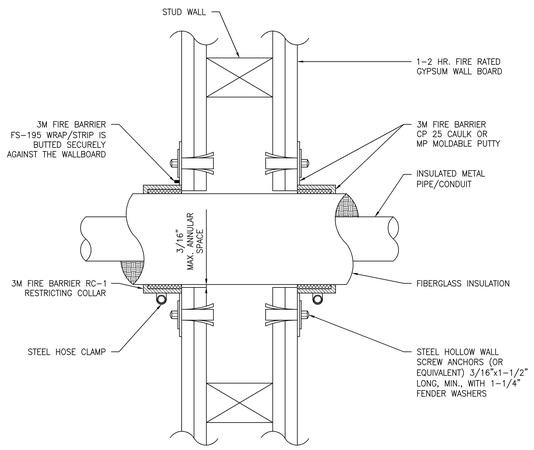

10 FIRE STOP FOR CONDUIT PENETRATION THROUGH GYPSUM BOARD
SCALE: NONE

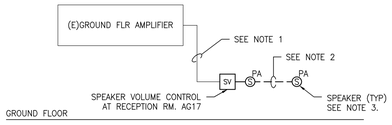

PUBLIC ADDRESS SYSTEM DETAIL NOTES:
1. EXISTING WIRING FEEDING THE PA SPEAKER IN AUDIOLOGY TO BE REUSED. ALL INTERCONNECTING WIRING TO BE NEW
2. MINIMUM CONDUCTOR SIZE 16AWG. CONTRACTOR TO INCREASE AS REQUIRED FOR VOLTAGE DROP.
3. REFER TO FLOOR PLANS FOR QUANTITY AND LOCATION OF ALL SPEAKERS.
4. ALL NEW PA CONDUIT AND JUNCTION BOXES MUST BE PAINTED YELLOW.

11 PUBLIC ADDRESS SYSTEM RISER
SCALE: NO SCALE

100% CONTRACT DOCUMENTS
FULLY SPRINKLERED

Revisions	Date

Miller-Remick LLC
M.E.P. & Structural Engineering
A Service Disabled Veteran Owned Small Business
1010 KINGS HIGHWAY SOUTH
CHERRY HILL, NEW JERSEY 08034
PHONE: (856)429-4000
FAX: (856)429-5002
SDVOSB

GARDNER PLUS ARCHITECTS, PLLC
40 WILDBRIAR ROAD
ROCHESTER, NEW YORK 14623
TELEPHONE: (585) 321.1210
FACSIMILE: (585) 321.1213
www.gardnerplus.com

MILLER-REMICK CORPORATION
PROFESSIONAL ENGINEER
THOMAS L. CHAPMAN, P.E.
NEW YORK LICENSE NO. 078145-1

Reviewed: Facility Manager
Reviewed: Facility Director
Reviewed:
Reviewed:

Drawing Title: DETAILS
Approved: Project Director

Project Title: AUDIOLOGY LAB RENOVATION
Building Number: NO. 1
Checked: BEAVER
Drawn: READ
Location: VAMC SYRACUSE, NY

Date: 05-19-2014
Project No. 528A7-13-750
DRAWING NO. EP-501
Dwg. 39 Of 46

VA HEALTHCARE NETWORK UPSTATE NEW YORK
Department of Veterans Affairs

VA FORM 08-6231

GENERAL SHEET NOTES:

1. SEE DRAWING E-001 AND E-002 FOR GENERAL NOTES, SYMBOLS AND ABBREVIATIONS.

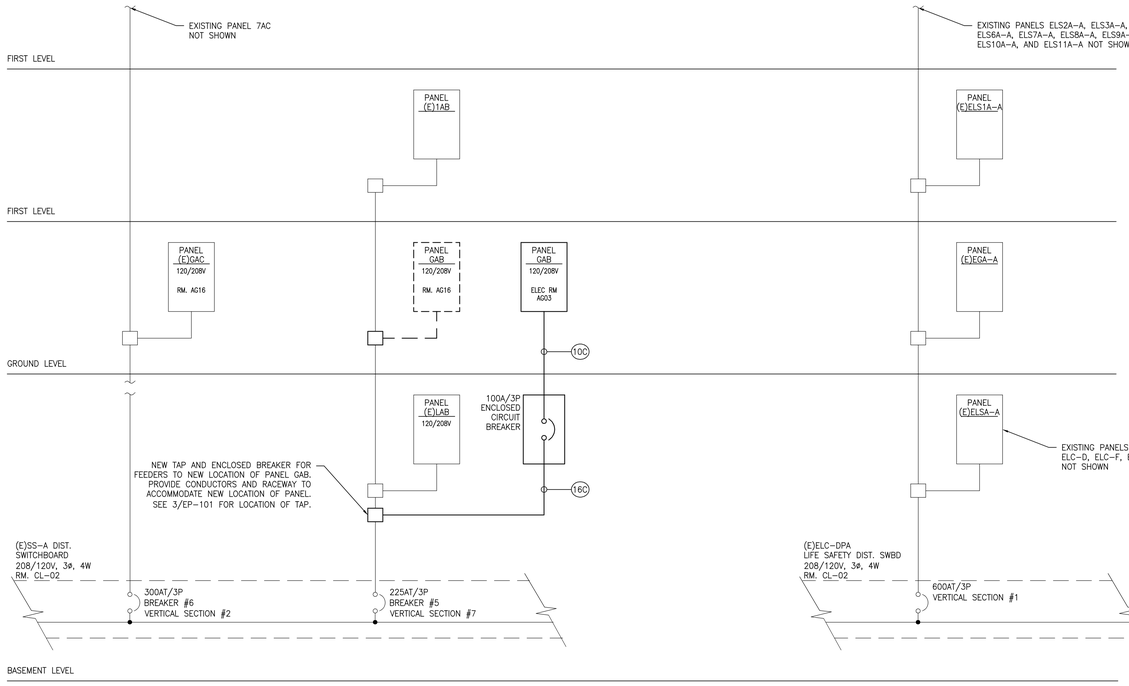

1 PARTIAL SINGLE LINE – PANELS GAB & GAC
SCALE: NONE

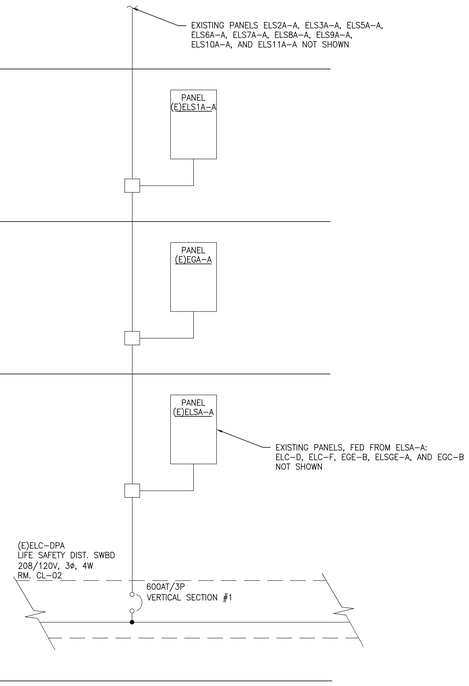

2 PARTIAL SINGLE LINE – PANEL EGA-A
SCALE: NONE FOR REFERENCE

WIRE AND CONDUIT SIZING SCHEDULE

1. CONDUIT SIZES SHOWN ARE TYPICAL FOR CONDUCTOR SIZES AND QUANTITY. CONDUIT AND WIRE SIZE NOTED ON THE ELECTRICAL FLOOR PLANS AND SINGLE LINE TAKE PRECEDENCE.

SINGLE LINE TAG: THIS COLUMN COMBINED WITH "A", "B", OR "C" COLUMN	WIRE SIZE (AWG/KCMIL)		NO. OF WIRES & CONDUIT SIZE IN INCHES		
	CONDUCTOR PHASE & NEUTRAL	GROUND	A	B	C
			1PH, 2W+G	3PH, 3W+G	3PH, 4W+G
1	14	14	3/4	3/4	3/4
2	12	12	3/4	3/4	3/4
3	10	10	3/4	3/4	3/4
4	8	10	3/4	3/4	3/4
5	6	10	3/4	3/4	1
6	4	10	3/4	1	1 1/4
7	4	8	3/4	1	1 1/4
8	3	8	1	1	1 1/4
9	2	8	1	1 1/4	1 1/4
10	1	8	1 1/4	1 1/4	1 1/2
11	1	6	1 1/4	1 1/4	1 1/2
12	1	6	1 1/4	1 1/4	1 1/2
13	1/0	6	1 1/4	1 1/2	1 1/2
14	2/0	6	1 1/2	2	2
15	3/0	6	1 1/2	2	2
16	4/0	4	1 1/2	2	2 1/2
17	250	4	2	2 1/2	2 1/2
18	350	4	2 1/2	2 1/2	3
19	500	3	2 1/2	3	3
20	(2) 3/0	(2) 3	(2) 1 1/2	(2) 2	(2) 2
21	(2) 4/0	(2) 2		(2) 2	(2) 2 1/2
22	(2) 250	(2) 2		(2) 2	(2) 2 1/2
23	(2) 350	(2) 1		(2) 2 1/2	(2) 3
24	(2) 500	(2) 1/0		(2) 3	(2) 3 1/2
25	(3) 300	(3) 1/0		(3) 2 1/2	(3) 3
26	(3) 400	(3) 2/0		(3) 3	(3) 3
27	(4) 350	(4) 3/0		(4) 2 1/2	(4) 3
28	(5) 400	(5) 4/0		(5) 3	(5) 3
29	(6) 400	(6) 250		(6) 3	(6) 3
30	(7) 500	(7) 350		(7) 3	(7) 3 1/2
31	(8) 500	(8) 400		(8) 3	(8) 3 1/2
EX	EXISTING FEEDERS AND CONDUIT				

Panel Name: GAB
Panel Voltage: 208Y/120V, 3 Phase, 4 Wire
New Panel
☐ Main Lugs Only ☑ Main Breaker: 100
Panel A.I.C. Rating: 22k

ID	Ckt #	Description	Breaker P	Breaker Trip	Load Code	Load VA	Phase A	Phase B	Phase C	Load VA	Load Code	Breaker Trip	Breaker P	Description	Ckt #	ID
	1	Audiology Booth / Control #1 Rm. AG32 & AG32A	1	20	NC	1000	2000			1000	NC	20	1	Audiology Booth / Control #2	2	
	3	Audiology Booth / Control #3	1	20	NC	1000		2000		1000	NC	20	1	Audiology Booth / Control #4	4	
	5	Audiology Booth / Control #5	1	20	NC	1000			2000	1000	NC	20	1	Audiology Booth / Control #6	6	
	7	Rec - Corridors 011,012A, 012B, & 013	1	20	REC	1260	2520			1260	REC	20	1	Rec - Corridor 010A, 014B, & Rm AG10	8	
	9	Rec - Rm AG31	1	20	REC	900		1980		1080	REC	20	1	Rec - Rm AG14	10	
	11	Rec - Rm AG22	1	20	REC	900			1800	900	REC	20	1	Rec - Rm AG21	12	
	13	Rec - Rm AG18	1	20	REC	900	1980			1080	REC	20	1	Rec - Rm AG29 & Closet AG33	14	
	15	Rec - Rm AG24	1	20	REC	900		1800		900	REC	20	1	Rec - Rm AG24	16	
	17	Rec - Rm AG19 & Rm. AG20	1	20	REC	1260			2520	1260	REC	20	1	Rec - Rm AG17	18	
	19	Rec - Rm AG17 & AG17A	1	20	REC	1080	2080			1000	REC	20	1	Rec - Copier Alcove 011A	20	
	21	Rec - Rm AG10A, TV in Rm AG10, & Elec Rms.	1	20	REC	720		1720		1000	REC	20	1	Rec - Copier Alcove 011A	22	
	23	Rec - Check-in Kiosk in Rm AG10	1	20	REC	500			860	360	REC	20	1	Rec - Rm AG25	24	
	25	Lts - Rm AG18, AG21, AG22, AG25, & AG31	1	20	L	900	1260			360	REC	20	1	Rec - Rm AG25	26	
	27	Lts - Rm AG20, AG21, AG24A, & AG29	1	20	L	790		1540		750	NC	20	1	Condensate Pumps - Cor. 011, 014B & Rm. AG31	28	
	29	Lts - RM AG10, AG14, AG17, AG17A, Corr 014A & B	1	20	L	1200			1200			20	1	Spare	30	
	31	Spare	1	20								20	1	Spare	32	
	33	Spare	1	20								20	1	Spare	34	
	35	Available for existing unknown circuits	1	20	EX	500			1000	500	EX	20	1	Available for DDC panels	36	
	37	Available for existing unknown circuits	1	20	EX	500	1000			500	EX	20	1	Available for existing unknown circuits	38	
	39	Available for existing unknown circuits	1	20	EX	500		1000		500	EX	20	1	Available for existing unknown circuits	40	
	41	Available for existing unknown circuits	1	20	EX	500			1000	500	EX	20	1	Available for existing unknown circuits	42	

Total Connected Load 10840 10040 10380 (VA/PHASE)

N.E.C. LOAD SUMMARY

Load Types and Codes	Total Load (VA)	Demand Factor	NEC Sizing (VA)
Air Conditioning (AC)		1.00	
Heating (H)		1.00	
Kitchen Equipment (K)		1.00	
Lighting (L)	2890	1.00	2890
Receptacles (REC)	17620	0.78	13810
Existing (E)	4000	1.00	4000
Continuous (C)		1.25	
Non-Continuous (NC)	6750	1.00	6750
Refrigeration (REF)		1.00	
Elec. Load Totals:	**31260**		**27450** VA

ELECTRICAL DATA
Total Conn. Load: 31 KVA
Total Conn. Load: 87 Amps
Total NEC Sizing Load: 27 KVA
Total NEC Sizing Load: 76 Amps
Main Bus Size: 225 Amps

PANEL INFORMATION
Location: Corridor G11
Mounting: Flush Enclosure Type: Nema 1
Fed From: SSA, Section #7, Breaker #5
Equipment Ground Bus: Yes Bus Material: Copper
Isolated Ground Bus: No Neutral Size: 100%

PANEL LEGEND (ID)
ST - Shunt-Trip C.B.; G - GFI C.B.
LB - "Lock-On" C.B.
"C1" - Contactor Designation
--Remodels--
N - New C.B.; EX - Existing C.B.

PANEL NOTES

Panel Name: EGA-A
Panel Voltage: 208Y/120V, 3 Phase, 4 Wire
Existing Panel
☐ Main Lugs Only ☑ Main Breaker: 100
Panel A.I.C. Rating: 22k

ID	Ckt #	Description	Breaker P	Breaker Trip	Load Code	Load VA	Phase A	Phase B	Phase C	Load VA	Load Code	Breaker Trip	Breaker P	Description	Ckt #	ID
EX	1	Rec - AG308 E. Wall	1	20								20	1	Unknown	2	EX
EX	3	Lts - Elec. Office	1	20								20	1	Unknown	4	EX
EX	5	Rec - Under Panel EGA-A1	1	20								20	1	Unknown	6	EX
EX	7	Lts - Exits E Wing & Corr. AG23	1	20								20	1	Unknown	8	EX
EX	9	Lts - Exits E Wing, Corr. AG23, & AG20	1	20								20	1	Unknown	10	EX
EX	11	Lts - Stairw ell #2	1	20								20	1	Unknown	12	EX
EX	13	Lts - Emer. By Elev. CG19B, CG19C	1	20								20	1	Unknown	14	EX
EX	15	Lts - N. Sice Stairw el #2 (Grd to 9th Floors)	1	20								20	1	Unknown	16	EX
EX	17	Lts - S. Sice Stairw el #2 (Grd to 4th Floors)	1	20								20	1	Unknown	18	EX
EX	19	Wander Grd(4E-6E,8E), E. Stairw ell #2 Exit(3rd-8th)	1	20								20	1	Unknown	20	EX
EX	21	Lts - S. Sice Stairw ell #5 (Bsmt to 9th Floors)	1	20								20	1	Unknown	22	EX
EX	23	Lts - N. Sice Stairw ell #5 (Bsmt to 9th Floors)	1	20								20	1	Unknown	24	EX
EX	25	Wander Grd(8W Stair), W. Stairw ell #5 Exit(Bsmt-9th)	1	20								20	1	Unknown	26	EX
EX	27	Rec - Director's Suite	1	20								20	1	Unknown	28	EX
EX	29	Rec - Red Wire Operator's Rm. AG10	1	20								20	1	Unknown	30	EX
EX	31	Rec - Director's AG43	1	20								20	1	Unknown	32	EX
EX	33	Rec - Emer. AG10, Fire Alarm	1	20								20	1	Unknown	34	EX
EX	35	Rec - AG12	1	20								20	1	Unknown	36	EX
N	37	Fire Smoke Dampers - Shaft #1	1	20	NC	250	1450			1200	L	20	1	Lts - Emer. Audiology Booths	38	N
N	39	Lts - Emer. Audiology Lab, Elec. Rms, & AG10A	1	20	L	890		890						Space	40	
	41	Space												Space	42	

Total Connected Load 1450 890 (VA/PHASE)

N.E.C. LOAD SUMMARY

Load Types and Codes	Total Load (VA)	Demand Factor	NEC Sizing (VA)
Air Conditioning (AC)		1.00	
Heating (H)		1.00	
Kitchen Equipment (K)		1.00	
Lighting (L)	2090	1.00	2090
Receptacles (REC)		1.00	
Existing (E)		1.00	
Continuous (C)		1.25	
Non-Continuous (NC)	250	1.00	250
Refrigeration (REF)		1.00	
Elec. Load Totals:	**2340**		**2340** VA

ELECTRICAL DATA
Total Conn. Load: 2 KVA
Total Conn. Load: 6 Amps
Total NEC Sizing Load: 2 KVA
Total NEC Sizing Load: 6 Amps
Main Bus Size: 225 Amps

PANEL INFORMATION
Location: Elec. Closet AG03
Mounting: Surface Enclosure Type: Nema 1
Fed From: 70A Disconnect from ELC-DPA, Sect #5
Equipment Ground Bus: Yes Bus Material: Copper
Isolated Ground Bus: No Neutral Size: 100%

PANEL LEGEND (ID)
ST - Shunt-Trip C.B.; G - GFI C.B.
LB - "Lock-On" C.B.
"C1" - Contactor Designation
--Remodels--
N - New C.B.; EX - Existing C.B.

PANEL NOTES

LIGHTING FIXTURE SCHEDULE

TYPE	DIMENSIONS	DESCRIPTION	LAMPS QTY	LAMPS TYPE	BALLAST QTY	VOLTS	MOUNTING	REMARKS
A1	2'x2'	DIRECT/INDIRECT HIGHLY REFLECTIVE NON-GLARE MATTE WHITE POLYESTER POWDER COATED FINISH WITH ACRYLIC FULL-ENCLOSURE DIFFUSER SHIELD	N/A	LED - 3000 LUMENS	1	120	RECESSED GRID	DIMMABLE DRIVER OPTION WHERE REQUIRED ON DRAWINGS
A2	2'x2'	DIRECT/INDIRECT HIGHLY REFLECTIVE NON-GLARE MATTE WHITE POLYESTER POWDER COATED FINISH WITH ACRYLIC FULL-ENCLOSURE DIFFUSER SHIELD	N/A	LED - 3800 LUMENS	1	120	RECESSED GRID	DIMMABLE DRIVER OPTION WHERE REQUIRED ON DRAWINGS
B1	2'x4'	DIRECT/INDIRECT HIGHLY REFLECTIVE NON-GLARE MATTE WHITE POLYESTER POWDER COATED FINISH WITH ACRYLIC FULL-ENCLOSURE DIFFUSER SHIELD	N/A	LED - 5000 LUMENS	1	120	RECESSED GRID	DIMMABLE DRIVER OPTION WHERE REQUIRED ON DRAWINGS
D1	6" APERTURE	LOW PROFILE FLUORESCENT DOWNLIGHT WITH CLEAR SEMI-SPECULAR REFLECTOR. WHITE TRIM AND HORIZONTAL LAMPING	1	CFL 26W	1	120	RECESSED GRID	5 3/16" DEEP PROFILE
U1	2'-0"	LOW PROFILE LED UNDERCABINET FIXTURE, WHITE HOUSING	N/A	LED	1	120	SURFACE	
W1	2'-0"	WHITE AMBIENT UP/DOWN CLOSED TOP BATHROOM/VANITY LIGHTING WITH FROSTED ACRYLIC SHIELD	N/A	LED - 3000 LUMENS	1	120	SURFACE	
W2		FLUORESCENT 12" WHITE WALL SCONCE, CLOSED TOP AND BOTTOM. UL LISTED FOR WET LOCATIONS	1	CFL 26W	1	120	SURFACE	
X	N/A	VA STANDARD EXIT SIGN (MATCH TO EXISTING TYPE CURRENTLY USEDIN THIS FACILITY)	N/A	LED	1	120	SURFACE	REFER TO LIGHTING DWGS FOR MOUNTING AND DIRECTIONAL ARROW REQUIREMENTS

100% CONTRACT DOCUMENTS
FULLY SPRINKLERED

Revisions	Date

Miller-Remick LLC
M.E.P. & Structural Engineering
A Service Disabled Veteran Owned Small Business
1010 KINGS HIGHWAY SOUTH
CHERRY HILL, NEW JERSEY 08034
PHONE: (856)429-4000
FAX: (856)429-5002
SDVOSB

GARDNER PLUS ARCHITECTS, PLLC
40 WILDBRIAR ROAD
ROCHESTER, NEW YORK 14623
TELEPHONE: (585) 321.1210
FACSIMILE: (585) 321.1213
www.gardnerplus.com

MILLER-REMICK CORPORATION
PROFESSIONAL ENGINEER
THOMAS L. CHAPMAN, P.E.
NEW YORK LICENSE NO. 078145-1

Reviewed: Facility Manager
Reviewed: Facility Director
Reviewed:
Reviewed:

Drawing Title: ELECTRICAL SINGLE LINE, DIAGRAMS AND LIGHTING FIXTURE SCHEDULE

Approved: Project Director

Project Title: AUDIOLOGY LAB RENOVATION

Building Number: NO. 1
Checked: BEAVER
Drawn: READ
Location: VAMC SYRACUSE, NY

Date: 05-19-2014
Project No. 528A7-13-750
DRAWING NO. EP-601
Dwg. 40 Of 46

VA HEALTHCARE NETWORK UPSTATE NEW YORK
Department of Veterans Affairs

VA FORM 08-6231

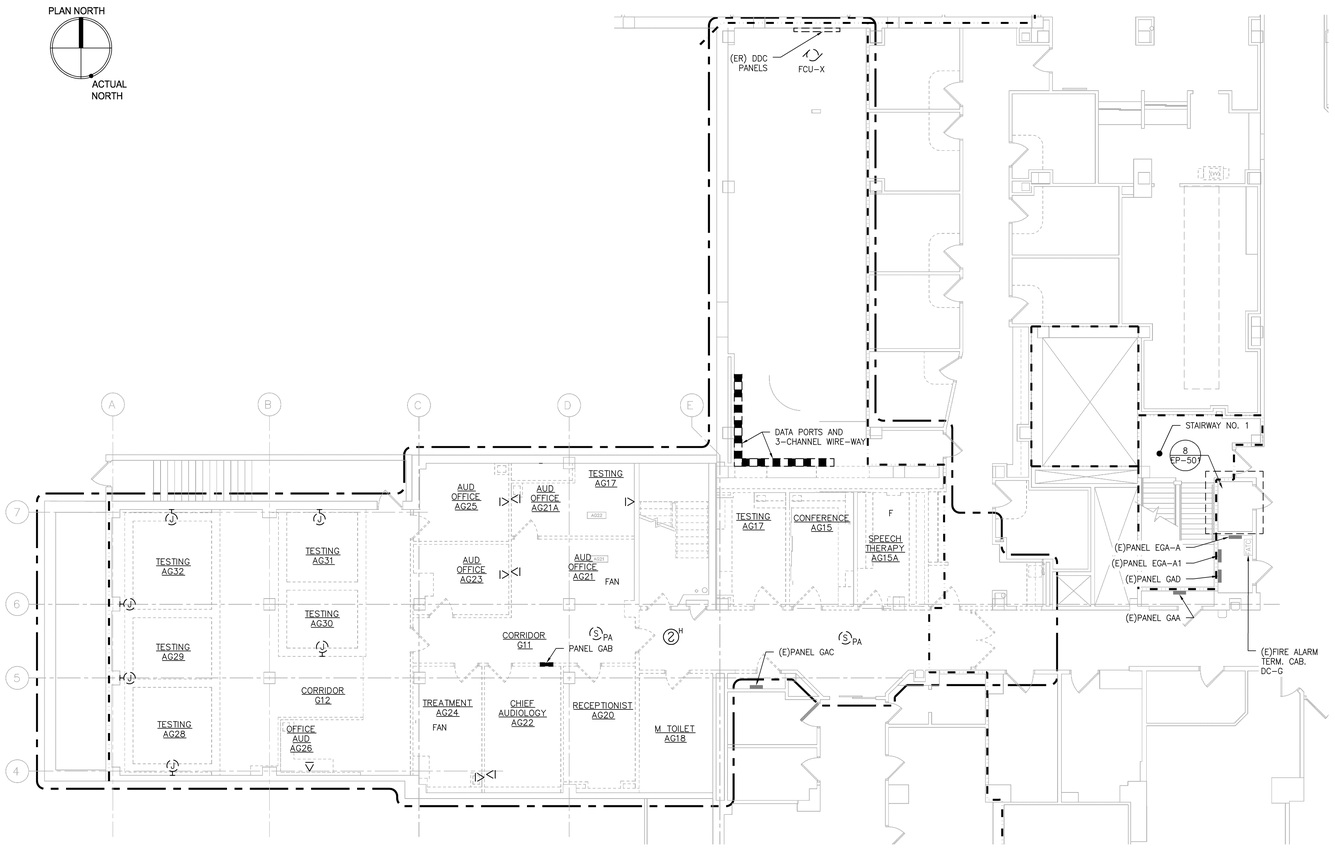

1 SYSTEMS DEMOLITION PLAN
SCALE: 1/8" = 1'-0"

GENERAL SHEET NOTES:

1. SEE DWG. E-001 AND E-002 FOR GENERAL NOTES, SYMBOLS AND ABBREVIATIONS.
2. NEW WORK SHALL BE SUBJECT TO DIRECTION AND APPROVAL OF THE VA. SHUTDOWNS OR SERVICE INTERRUPTIONS REQUIRED SHALL OCCURRED IN VA OFF HOURS, IN MULTIPLE PHASES MAINTAINING SERVICES FOR REGULAR VA WORK HOURS. SHUTDOWNS OR SERVICE INTERRUPTION REQUIRED SHALL BE COORDINATED WITH AND APPROVED BY THE VA BEFORE THEY ARE IMPLEMENTED. SUFFICIENT ADVANCE NOTICE MUST BE PROVIDED TO THE OWNER.

SHEET KEYNOTES:

1. THE PREFABRICATED AUDIO BOOTHS ARE TO BE SUPPLIED WITH INTEGRAL LIGHTS, SWITCHES, RECEPTACLES, AND PHONE/DATA OUTLETS. CONTRACTOR SHALL REFER TO MANUFACTURER'S RECOMMENDATIONS AND PROVIDE ALL REQUIRED RACEWAY AND CONDUCTORS TO SUPPLY POWER AND PHONE/DATA TO THE AUDIO BOOTHS.
2. PROVIDE HDMI CABLE BETWEEN OUTLETS. ALLOW FOR 24" OF SLACK AT EACH END.
3. CONNECT TO AND USE EXISTING CABLE MANAGEMENT SYSTEM FROM THIS POINT BACK TO EXISTING DATA ROOM AG01.
4. TYPICAL TELE/DATA OUTLET DETAIL FOR BOOTHS. SEE DETAIL E/EP5.01
5. E.C. TO PROVIDE AND INSTALL A BASKET TYPE CABLE TRAY 4"H X 12" W. CABLE TRAY SUPPORTS SHALL COMPLY WITH NEC-392, NEMA V1 AND NEMA FG1 STANDARDS.
6. PROVIDE AND INSTALL 2" GALVANIZED STEEL 2 HR FIRE RESISTANCE FIRESTOP SLEEVE. SLEEVE WILL BE USED FOR IT CABLES EXTENDED FROM AG01 IT ROOM TO DESIGNATED AREAS ALONG HALLWAY 014B.
7. HORIZONTAL IT DISTRIBUTION CABLES WILL TRANSITION FROM THE CABLE TRAY TO J-HOOKS. IT CABLES WILL BE BUNDLED CLOSELY TOGETHER IN ANY PATHWAY TO ACHIEVE A NEAT APPEARANCE.
8. HORIZONTAL IT DISTRIBUTION CABLES WILL TRANSITION FROM THE FIRESTOP SLEEVE TO J-HOOKS. IT CABLES WILL BE BUNDLED CLOSELY TOGETHER IN ANY PATHWAY TO ACHIEVE A NEAT APPEARANCE.
9. TV COAXIAL CABLE TO BE EXTENDED TO SPLITTER IN ELECTRICAL ROOM AG03. E.C. TO COORDINATE WITH VA HOSPITAL IN ORDER TO INTEGRATE TV COAXIAL CONNECTION TO MATV HOSPITAL SYSTEM.

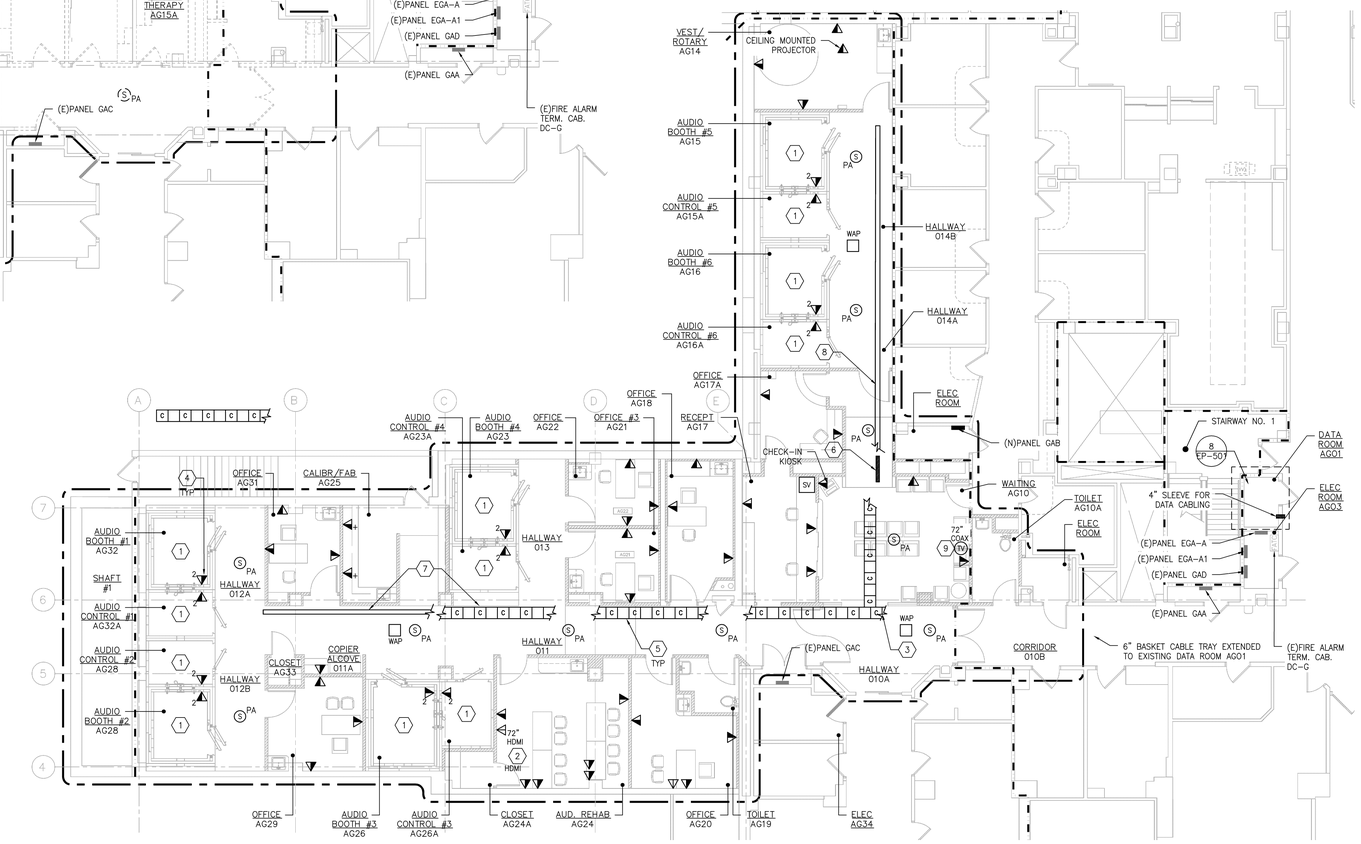

2 SYSTEMS PLAN
SCALE: 1/8" = 1'-0"

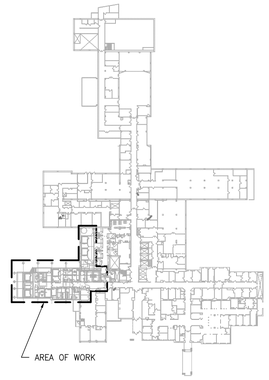

KEY PLAN – GROUND FLOOR
SCALE: NONE

100% CONTRACT DOCUMENTS
FULLY SPRINKLERED

Revisions	Date

Miller-Remick LLC
M.E.P. & Structural Engineering
A Service Disabled Veteran Owned Small Business
1010 KINGS HIGHWAY SOUTH
CHERRY HILL, NEW JERSEY 08034
PHONE: (856)429-4000
FAX: (856)429-5002

GARDNER PLUS ARCHITECTS, PLLC
40 WILDBRIAR ROAD
ROCHESTER, NEW YORK 14623
TELEPHONE: (585) 321.1210
FACSIMILE: (585) 321.1213
www.gardnerplus.com

MILLER-REMICK CORPORATION
PROFESSIONAL ENGINEER
THOMAS L. CHAPMAN, P.E.
NEW YORK LICENSE NO. 078145-1

Reviewed: Facility Manager
Reviewed: Facility Director
Reviewed:
Reviewed:

Drawing Title: SYSTEMS GROUND FLOOR DEMOLITION AND NEW WORK PLANS

Approved: Project Director

Project Title: AUDIOLOGY LAB RENOVATION

Building Number: NO. 1
Checked: BEAVER
Drawn: READ
Location: VAMC SYRACUSE, NY

Date: 05-19-2014
Project No. 528A7-13-750
DRAWING NO. EY-101
Dwg. 41 Of 46

VA HEALTHCARE NETWORK UPSTATE NEW YORK
Department of Veterans Affairs

VA FORM 08-6231