DEPARTMENT OF VETERANS AFFAIRS MEDICAL CENTER
PHILADELPHIA VA MEDICAL CENTER
ENGINEERING SERVICES (138)
3900 WOODLAND AVENUE
PHILADELPHIA, PA 19104

REPLACEMENT OF AC-27
BUILDING NO. TWO

PROJECT NO. 642-11-160

PROJECT LOCATION MAP

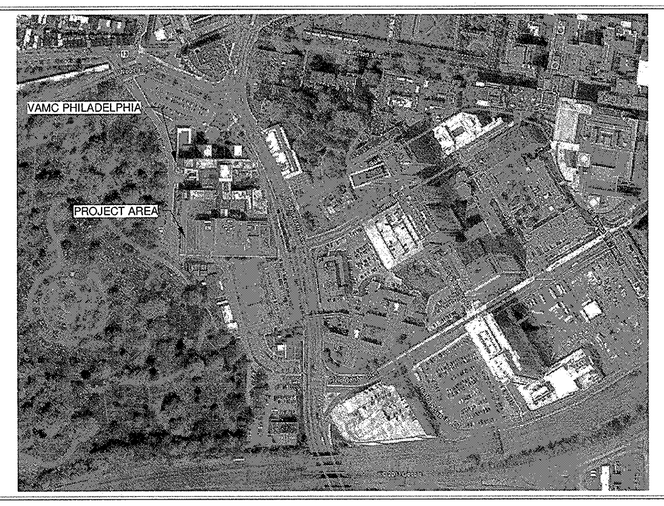

VICINITY MAP

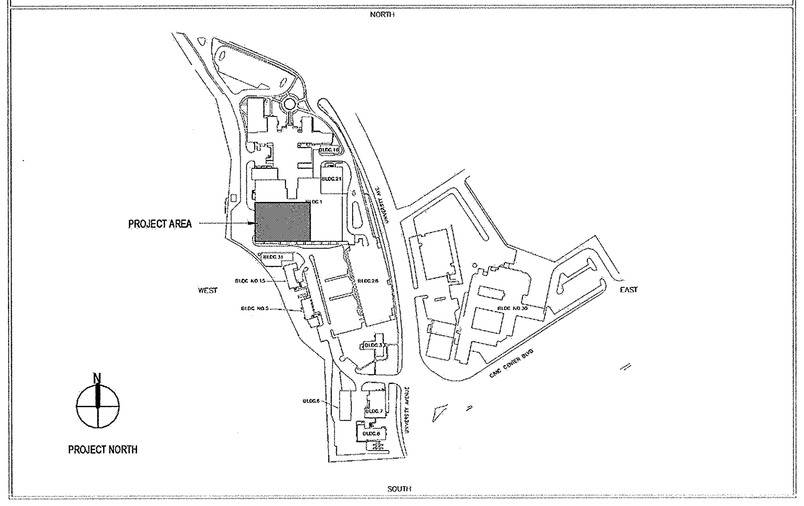

INDEX OF DRAWINGS

Sheet List - AC27	
Sheet Number	**Sheet Name**
GENERAL	
GI-AC27-001	COVER SHEET
ARCHITECTURAL	
AE-AC27-101	FIFTH FLOOR PLAN
AE-AC27-401	FIFTH FLOOR ENLARGED REFLECTED CEILING PLAN
MECHANICAL	
MG-AC27-001	MECHANICAL NOTES, SYMBOLS, AND ABBREVIATIONS
MH-AC27-101	PARTIAL FIFTH FLOOR PLAN UNIT "B" MECHANICAL DEMOLITION
MH-AC27-102	PARTIAL SIXTH FLOOR PLAN UNIT "B" MECHANICAL DEMOLITION
MH-AC27-103	PARTIAL FOURTH FLOOR ROOF PLAN UNIT "B" MECHANICAL - TEMPORARY UNIT
MH-AC27-201	PARTIAL FIFTH FLOOR PLAN UNIT "B" MECHANICAL NEW WORK
MH-AC27-202	PARTIAL SIXTH FLOOR PLAN UNIT "B" MECHANICAL NEW WORK
MH-AC27-401	MECHANICAL EQUIPMENT ROOM 6B102 ENLARGED PLAN
MH-AC27-501	MECHANICAL DETAILS
MH-AC27-502	MECHANICAL DETAILS
MH-AC27-503	MECHANICAL DETAILS
MH-AC27-504	MECHANICAL DETAILS
MH-AC27-601	MECHANICAL SCHEDULES
MH-AC27-701	MECHANICAL CONTROLS
MH-AC27-702	MECHANICAL CONTROLS
ELECTRICAL	
ES-AC27-001	ELECTRICAL SYMBOLS, ABBREVIATIONS, AND NOTES
ES-AC27-101	PARTIAL FIFTH FLOOR PLAN - ELECTRICAL DEMOLITION
ES-AC27-102	PARTIAL SIXTH FLOOR PLANS - ELECTRICAL DEMOLITION
ES-AC27-201	PARTIAL FIFTH FLOOR PLAN - ELECTRICAL POWER
ES-AC27-202	PARTIAL FOURTH AND SIXTH FLOOR PLANS - ELECTRICAL POWER
ES-AC27-301	ELECTRICAL SINGLE LINE DIAGRAMS
ES-AC27-401	ELECTRICAL PANEL SCHEDULES

FULLY SPRINKLERED
ISSUED FOR BID

Revisions	Date

CONSULTANTS:

MEP AND STRUCTURAL ENGINEER

H.F. LENZ COMPANY
1407 Scalp Avenue
Johnstown, PA 15904
Tel (814) 269-6300
www.hflenz.com

KEY PLAN:

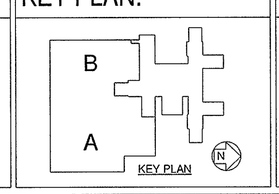

KEY PLAN

COMMONWEALTH OF PENNSYLVANIA REGISTERED PROFESSIONAL ENGINEER TIMOTHY M. EINHART

ARCHITECT:

ARCHITECT
Vision Design Group
2200 Dunbarton Drive Suite F
Chesapeake, VA 23325
Tel (757) 477-8600

ENVIRONMENTAL CONSULTANT
Earth Smart Environmental Solutions, LLC
232 S. Dillard Street, Suite 230
Winter Garden, FL 34787-3516

Project Number	Scale
	As indicated

Drawing Title: COVER SHEET	Project Title: REPLACEMENT OF AC-27	VA Project Number: 642-11-160	Office of Facilities Management
Approved: Project Director	Location: 3900 WOODLAND AVENUE PHILADELPHIA, PA 19104	Building Number: 2	
	Date: 10/26/12 / Checked: TME / Drawn:	Drawing Number: GI-AC27-001 Dwg. 1 of 24	Department of Veterans Affairs

VA FORM 08-6231, OCT 1978

WORK NOTES

1. REMOVE GRID AND CEILING TILE TO ALLOW FOR THE INSTALLATION OF MECHANICAL, PLUMBING OR ELECTRICAL SYSTEMS. SAVE AND STORE GRID AND TILE FOR REINSTALLATION IN AREAS WHERE CEILING TILE AND GRID ARE REMOVED AND REPLACED. THE CONTRACTOR SHALL USE CARE NOT TO DAMAGE THE EXISTING CEILING TILE OR GRID COMPONENTS. EXISTING LIGHT FIXTURES, SPRINKLER HEADS, FIRE ALARM AND LIFE SAFETY DEVICES SHALL REMAIN IN THEIR EXISTING LOCATIONS AND REMAIN ACTIVE DURING CONSTRUCTION.

2. INSTALL NEW GRID AND CEILING TILE TO ALLOW FOR THE INSTALLATION OF MECHANICAL SYSTEM COMPONENTS, PLUMBING COMPONENTS, OR ELECTRICAL SYSTEMS. NEW GRID AND TILE SHALL MATCH THE EXISTING. SUBSTITUTIONS SHALL BE APPROVED BY THE CONTRACTING OFFICER. EXISTING LIGHT FIXTURES, SPRINKLER HEADS, FIRE ALARM AND LIFE SAFETY DEVICES SHALL REMAIN IN THEIR EXISTING LOCATIONS AND REMAIN ACTIVE DURING CONSTRUCTION.

3. EXISTING GWB CEILING. PERFORM ALL WORK ABOVE HARD CEILING USING ACCESS PANEL PROVIDED. EXISTING LIGHT FIXTURES, SPRINKLER HEADS, FIRE ALARM AND LIFE SAFETY DEVICES SHALL REMAIN IN THEIR EXISTING LOCATIONS AND REMAIN ACTIVE DURING CONSTRUCTION.

REFLECTED CEILING LEGEND

SYMBOL	DESCRIPTION
	4"X2' LINEAR DIFFUSER
	4"X4' LINEAR DIFFUSER4"X4' LINEAR DIFFUSER
	EXHAUST GRILL
	2'X2' LAYIN SUPPLY GRILL
	TYPICAL 1'X4' FLUORESCENT RECESSED FIXTURE
	TYPICAL1'X4' FLUORESCENT SURFACE MOUNTED FIXTURE
	TYPICAL 2'X4' FLUORESCENT RECESSED MOUNTED FIXTURE
	TYPICAL 2'X4' FLUORESCENT SURFACE MOUNTED FIXTURE
	TYPICAL 2'X2' FLUORESCENT RECESSED MOUNTED FIXTURE
	RECESSED MOUNTED DOWN LIGHT FIXTURE
S	SOUND SYSTEM RECESSED 8" DIAMETER CEILING MOUNTED SPEAKER - SQUARE BAFFLE
S FA	FIRE ALARM SPEAKER/STROBE
PJ	PROJECTOR
	PENDENT SPRINKLER
HD	HEAT DETECTOR

1 — DETAIL NUMBER OR SECTION LETTER
M-501 — DRAWING NUMBER WHERE DETAIL IS DRAWN

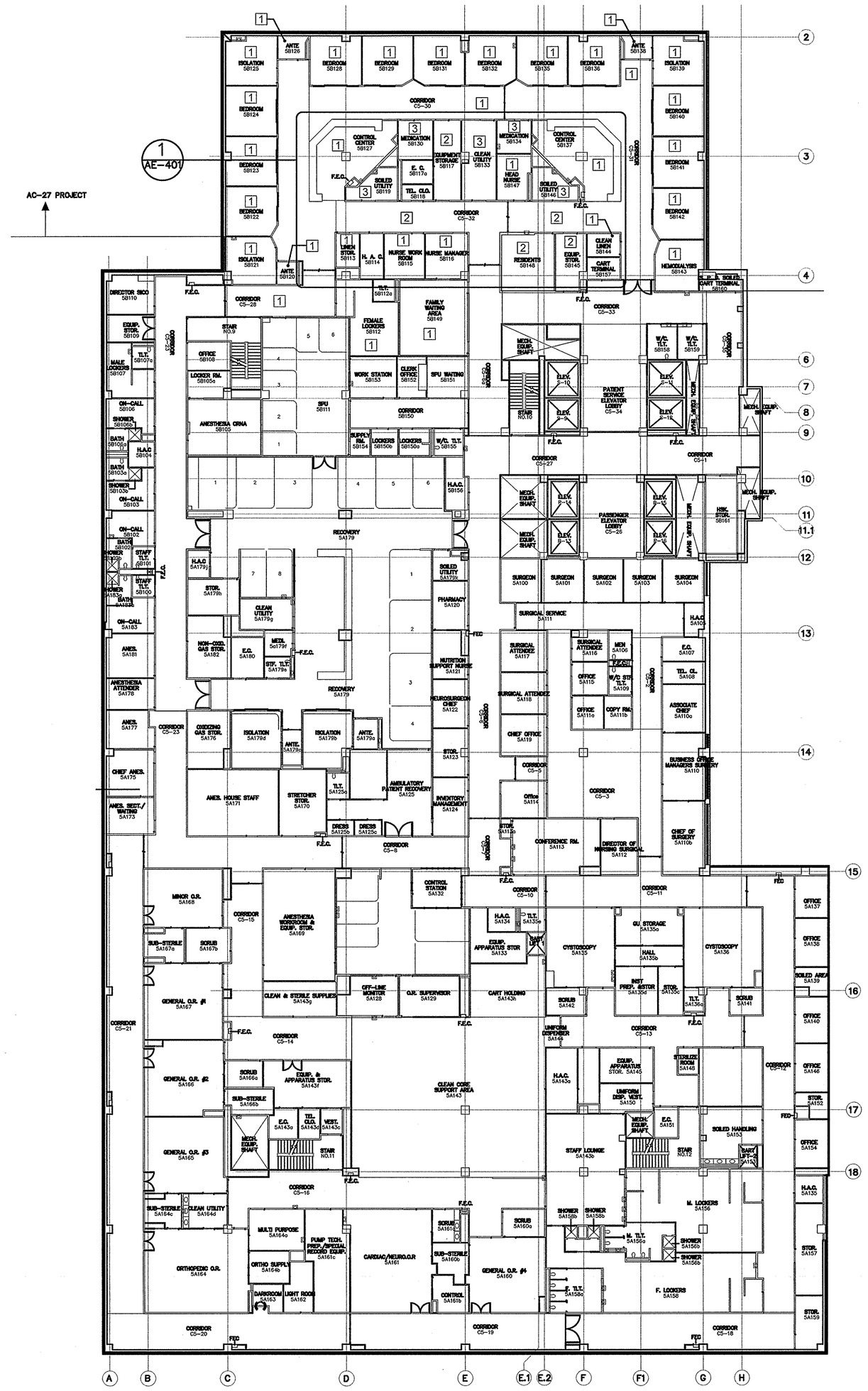

FIFTH FLOOR PLAN
1/16"= 1'-0"

FULLY SPRINKLERED
ISSUED FOR BID

Revisions:	Date

CONSULTANTS:
MEP AND STRUCTURAL ENGINEER
H.F. LENZ COMPANY
1407 Scalp Avenue
Johnstown, PA 15904
Tel (814) 269-9300
www.hflenz.com

KEY PLAN:
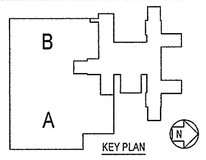

SEAL:
Clifton N. Strickland & AIA
REGISTERED ARCHITECT
PENNSYLVANIA
CLIFTON N. STRICKLAND III, RA
REGISTERED ARCHITECT
PENNSYLVANIA

ARCHITECT/ENGINEERS:
ARCHITECT
VDG
Vision Design Group
2200 Dunbarton Drive Suite F
Chesapeake, VA 23325
Tel (757) 477-8600

ENVIRONMENTAL CONSULTANT
Earth Smart Environmental Solutions, LLC
232 S. Dillard Street, Suite 230
Winter Garden, FL 34787-3516

Project Number
Scale: As Noted

Drawing Title: FIFTH FLOOR PLAN
Approved: Project Director

Project Title: REPLACEMENT OF AC-27
Location: VAMC, PHILADELPHIA, PA
Date: 10/26/12
Checked: CNSIII
Drawn: CS

Project Number: 642-11-160
Building Number: 2
Drawing Number: AE-101
Dwg. 2 of 24

Office of Construction and Facilities Management
Department of Veterans Affairs

VA FORM 08-6231

WORK NOTES

1. REMOVE GRID AND CEILING TILE TO ALLOW FOR INSTALLATION OF MECHANICAL, PLUMBING, OR ELECTRICAL SYSTEMS. STORE GRID AND TILE FOR REINSTALLATION. IN AREAS WHERE CEILING TILE AND GRID ARE REMOVED AND REPLACED, THE CONTRACTOR SHALL USE CARE NOT TO DAMAGE THE EXISTING CEILING TILE OR THE GRID COMPONENTS. EXISTING LIGHT FIXTURES, FIRE ALARM AND LIFE SAFETY DEVICES SHALL REMAIN IN THEIR EXISTING LOCATIONS AND REMAIN ACTIVE DURING CONSTRUCTION. SEE SPECIFICATIONS FOR ADDITIONAL REQUIREMENTS.

2. INSTALL NEW GRID AND CEILING TILE TO MATCH EXISTING. IF EXISTING GRID AND CEILING TILE IS UNAVAILABLE, THE ARCHITECT AND CONTRACTING OFFICER SHALL APPROVE SUBSTITUTES. EXISTING LIGHT FIXTURES, FIRE ALARM AND LIFE SAFETY DEVICES SHALL REMAIN IN THEIR EXISTING LOCATIONS AND REMAIN ACTIVE DURING CONSTRUCTION. SEE SPECIFICATIONS FOR ADDITIONAL REQUIREMENTS.

REFLECTED CEILING LEGEND

SYMBOL	DESCRIPTION
	4"X2' LINEAR DIFFUSER
	4"X4' LINEAR DIFFUSER4"X4' LINEAR DIFFUSER
	EXHAUST GRILL
	2'X2' LAYIN SUPPLY GRILL
	TYPICAL 1'X4' FLUORESCENT RECESSED FIXTURE
	TYPICAL1'X4' FLUORESCENT SURFACE MOUNTED FIXTURE
	TYPICAL 2'X4' FLUORESCENT RECESSED MOUNTED FIXTURE
	TYPICAL 2'X4' FLUORESCENT SURFACE MOUNTED FIXTURE
	TYPICAL 2'X2' FLUORESCENT RECESSED MOUNTED FIXTURE
	RECESSED MOUNTED DOWN LIGHT FIXTURE
S	SOUND SYSTEM RECESSED 8" DIAMETER CEILING MOUNTED SPEAKER - SQUARE BAFFLE
S FA	FIRE ALARM SPEAKER/STROBE
PJ	PROJECTOR
	PENDENT SPRINKLER
HD	HEAT DETECTOR

1 — DETAIL NUMBER OR SECTION LETTER
M-501 — DRAWING NUMBER WHERE DETAIL IS DRAWN

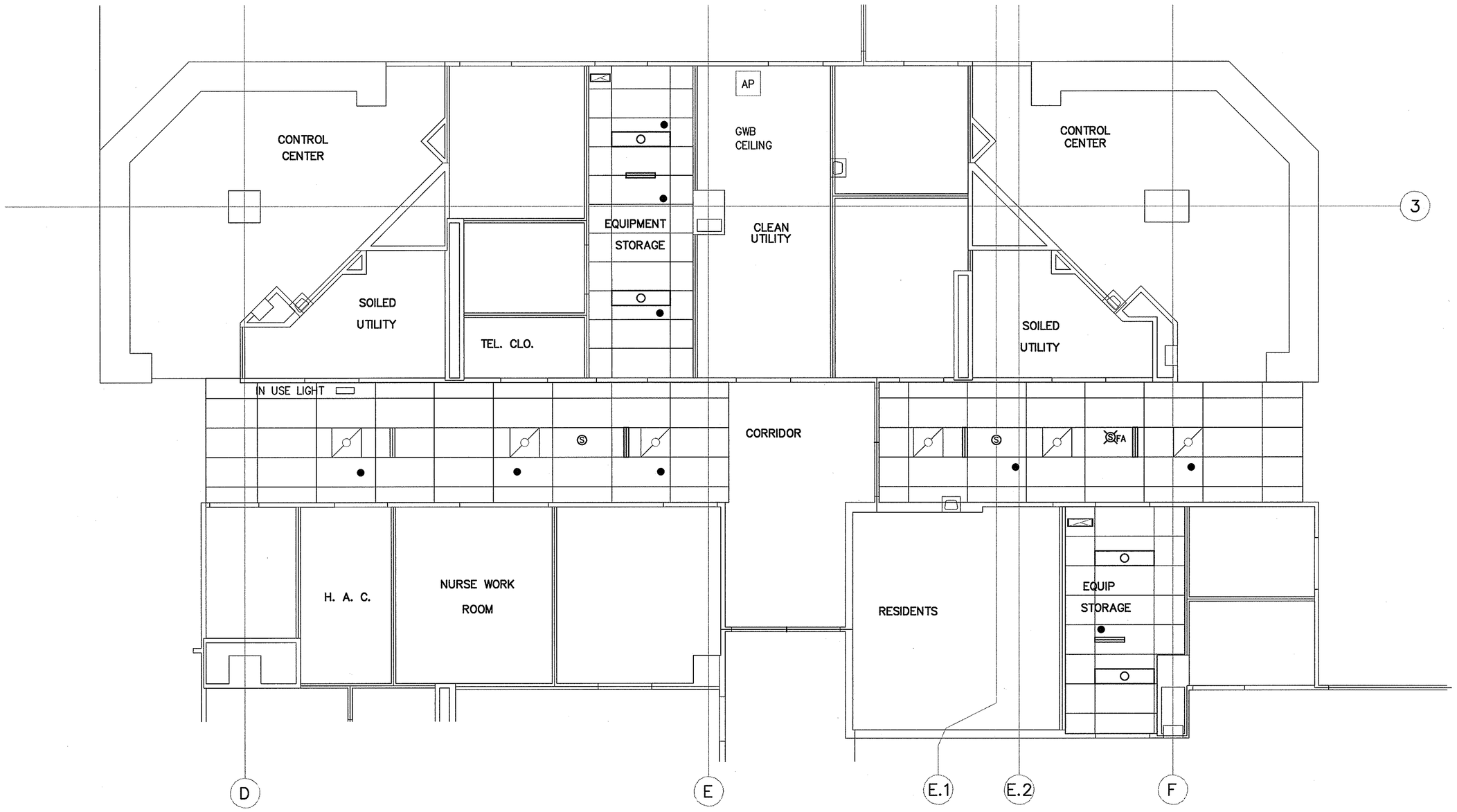

1 / AE-401 FIFTH FLOOR ENLARGED REFLECTED CEILING PLAN
1/4"= 1'-0"

INFECTION CONTROL PROCEDURES (ICRA)

GENERAL NOTES:

1. BEFORE CONSTRUCTION BEGINS, COORDINATE THE ICRA PROCEDURE WITH THE FACILITY INFECTION CONTROL DEPARTMENT.
2. COORDINATE WITH FACILITY DEPARTMENT FOR ANY PHASING PLAN REQUIREMENTS TO SCHEDULE SHUTDOWNS, TEMPORARY RELOCATION, OR CLOSED DOWN AREAS THAT MAY BE AFFECTED DUE TO THE RENOVATION OF THE SCHEDULED PROJECT.

POST CONSTRUCTION

1. DO NOT REMOVE BARRIERS FROM WORK AREA UNTIL COMPLETE PROJECT IS INSPECTED BY THE OWNER'S PROJECT ENGINEER AND THOROUGHLY CLEANED BY OWNER'S ENVIRONMENTAL SERVICES DEPARTMENT.
2. REMOVE BARRIER MATERIAL CAREFULLY TO MINIMIZE SPREADING OF DIRT AND DEBRIS ASSOCIATED WITH CONSTRUCTION.
3. VACUUM WORK AREA WITH HEPA FILTERED VACUUMS.
4. WET MOP WITH DISINFECTANT.
5. REMOVE ISOLATION OF HVAC SYSTEM IN AREAS WHERE WORK HAS BEEN PERFORMED.

DURING CONSTRUCTION

1. REMOVE OR ISOLATE HVAC SYSTEM IN AREA WHERE WORK IS BEING DONE TO PREVENT CONTAMINATION OF THE DUCT SYSTEM.
2. COMPLETE ALL CRITICAL BARRIERS I.E. SHEETROCK, PLYWOOD, PLASTIC, TO SEAL AREA FROM NON WORK AREA OR IMPLEMENT CONTROL CUBE METHOD (CART W/PLASTIC COVERING AND SEALED CONNECTION TO WORK SITE W/HEPA VACUUM FOR VACUUMING PRIOR TO EXIT.) BEFORE CONSTRUCTION BEGINS.
3. MAINTAIN NEGATIVE AIR PRESSURE WITHIN WORK SITE UTILIZING HEPA EQUIPPED AIR FILTRATION UNITS. CONTRACTOR SHALL MAINTAIN 0.001" NEGATIVE PRESSURE.
4. SEAL HOLES, PIPES , CONDUITS, AND PUNCTURES APPROPRIATELY
5. CONSTRUCT ANTEROOM AND PROVIDE WITH WALK OFF STICKY MATS. REQUIRE ALL PERSONNEL TO PASS THROUGH THIS ROOM SO THEY CAN VACUUM CLEAN THEMSELVES BEFORE LEAVING THE WORK SITE. AN ALTERNATIVE TO THIS METHOD WOULD BE TO WEAR CLOTH OR PAPER COVERALLS THAT ARE REMOVED EACH TIME THEY LEAVE THE WORK SITE.
6. ALL PERSONNEL ENTERING WORK SITE ARE REQUIRED TO WEAR SHOE COVERS. SHOE COVERS MUST BE CHANGED EACH TIME THE WORKER EXITS THE WORK SITE.
7. CONTAIN CONSTRUCTION WASTE BEFORE TRANSPORT IN TIGHTLY COVERED CONTAINERS.
8. COVER TRANSPORT RECEPTACLES OR CARTS. TAPE COVER SHUT UNLESS USING A SOLID LID.
9. CONTRACTOR TO MAINTAIN EXISTING QUANTITY (2) OF SMOKE COMPARTMENTS WITHIN AREA OF CONSTRUCTION DURING ALL CONSTRUCTION PHASES.
10. IF HEPA FILTER UNIT DISCHARGE DUCT MUST LEAVE THE ICRA CONTAINMENT AREA TO BE DISCHARGED TO THE OUTSIDE, THE DUCT SHALL BE SHEET METAL WHEN CROSSING THE ICRA BARRIER TO THE POINT OF DISCHARGE. A PLAN SHALL BE SUBMITTED AND REVIEWED WITH THE VA ENGINEER FOR OCCUPIED AREAS THAT THE DISCHARGE DUCT MUST TRAVERSE. FLEX DUCT IS PERMITTED INSIDE THE ICRA BARRIER AND OTHER LOCATIONS AS APPROVED BY THE VA . CONNECTIONS TO THE OUTSIDE DISCHARGE POINT SHALL BE MADE WITH SHEET METAL AND SHALL BE SECURE, CONNECTIONS SHALL NOT BE MADE WITH DUCT TAPE.
11. ANY MEP WORK OUTSIDE THE ICRA BARRIER DOES NOT REQUIRE FULL BARRIER WALL PROTECTION. LESS STRINGENT MEASURES SUCH AS PLASTIC SHEETING SHALL BE PERMITTED AS APPROVED NY THE VA ENGINEERING PERSONNEL FOR THE AREAS OF SHORT TERM WORK.

FULLY SPRINKLERED
ISSUED FOR BID

Revisions	Date

CONSULTANTS:
MEP AND STRUCTURAL ENGINEER
H.F. LENZ COMPANY
1407 Scalp Avenue
Johnstown, PA 15904
Tel (814) 269-9300
www.hflenz.com

KEY PLAN:
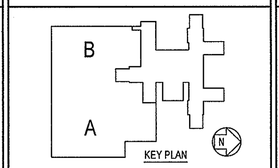

SEAL:
REGISTERED ARCHITECT COMMONWEALTH OF VIRGINIA
Clifton M. Shields Jr. AIA
CLIFTON M. SHIELDS JR. STRICKLAND HILL & SHIELDS

ARCHITECT/ENGINEERS:
ARCHITECT
Vision Design Group
2300 Dunbarton Drive Suite F
Chesapeake, VA 23325
Tel (757) 477-8600

ENVIRONMENTAL CONSULTANT
Earth Smart Environmental Solutions, LLC
232 S. Dillard Street, Suite 230
Winter Garden, FL 34787-3516

Project Number	Scale
	As Noted

Drawing Title: FIFTH FLOOR ENLARGED REFLECTED CEILING PLAN
Approved Project Director
Project Title: REPLACEMENT OF AC-27
Location: VAMC, PHILADELPHIA, PA
Date: 10/26/12 | Checked: CNSIII | Drawn: CS
Project Number: 642-11-160
Building Number: 2
Drawing Number: AE-401
Dwg. 3 of 24
Office of Construction and Facilities Management
Department of Veterans Affairs

VA FORM 08-6231

ABBREVIATIONS

ABV	ABOVE
AC	AIR CONDITIONING UNIT
AD	ACCESS DOOR
AF	AIRFOIL
AFM	AIR FLOW MEASURING DEVICE
AHU	AIR HANDLING UNIT
AI	ANALOG IN
AO	ANALOG OUT
AP	ACCESS PANEL
ATC	AUTOMATIC TEMPERATURE CONTROL
AV	AUDIO/VISUAL
AX	ACCESS
BC	BALANCING COCK
BG	BOTTOM GRILLE (WALL TYPE)
BLW	BELOW
CC	COOLING COIL
CCF	COUNTER CLOCKWISE FAN
CDL	CONDENSATE DRAIN LINE
CF	CENTRIFUGAL FAN
CFM	CUBIC FEET PER MINUTE
CH	CHILLED WATER
CHR	CHILLED WATER RETURN
CO	CLEAN OUT
COMP	COMPRESSOR
CONC	CONCRETE
CP	CONDENSATE PUMP
CU FT	CUBIC FEET
CUH	CABINET UNIT HEATER
CVB	CONSTANT VOLUME BOX
CW	COLD WATER
Db	DRY BULB TEMPERATURE
dB	DECIBELS
DI	DIGITAL INPUT
DIA	DIAMETER
DO	DIGITAL OUTPUT
Dp	DEWPOINT TEMPERATURE
DX	DIRECT EXPANSION
EA	EXHAUST AIR
EAT	ENTERING AIR TEMPERATURE
EAV	EXHAUST AIR VALVE
ECC	ENGINEERING CONTROL CENTER
EER	ENERGY EFFICIENCY RATIO
EF	EXHAUST FAN
EFF	EFFICIENCY
ENT	ENTERING
ERC	EXHAUST REGISTER CEILING
ERCP	EXHAUST REGISTER CEILING PERFORATED
ERW	EXHAUST REGISTER WALL
ESP	EXTERNAL STATIC PRESSURE
ET	EXPANSION TANK
EUH	ELECTRIC UNIT HEATER
EWT	ENTERING WATER TEMPERATURE
EX.	EXISTING
EXT	EXTERNAL
FC	FLEXIBLE CONNECTION
FC	FORWARD CURVED FAN
FCV	FLOW CONTROL VALVE
FF	FINAL FILTER
FLR	FLOOR
FPM	FEET PER MINUTE
FR	FROM
FT	FEET
GH	GLYCOL HEATING
GHR	GLYCOL HEATING RETURN
GPM	GALLONS PER MINUTE
GR	GLYCOL RUN AROUND SUPPLY
GRR	GLYCOL RUN AROUND RETURN
GV	GATE VALVE
HC	HEATING COIL
HD	HOOD
HE	AIR TO AIR HEAT EXCHANGER
HF	HEPA FILTER
HP	HORSEPOWER
HPR	HIGH PRESSURE STEAM RETURN
HPS	HIGH PRESSURE STEAM SUPPLY
HS	HORIZONTAL SPLIT
HUH	HORIZONTAL UNIT HEATER
HUM	HUMIDIFIER
HV	HIGH VELOCITY
HWH	HOT WATER HEATING
HWHR	HOT WATER HEATING RETURN
ID	INNER DIAMETER
IER	INVERTED ECCENTRIC REDUCER
IN	INCHES
LAT	LEAVING AIR TEMPERATURE
LBS/HR	POUNDS PER HOUR
LCHR	LOCAL CHILLED WATER RETURN
LCH	LOCAL CHILLED WATER SUPPLY
LF	LINEAR FEET
LPD	LOW PRESSURE DRIP
LPR	LOW PRESSURE STEAM CONDENSATE RETURN
LPS	LOW PRESSURE STEAM
LRADP	LINEAR RADIANT PANEL
LSD	LINEAR SLOT DIFFUSER
LVG	LEAVING
LWT	LEAVING WATER TEMPERATURE
MAX	MAXIMUM
MB	MIXING BOX
MBH	THOUSAND BTU
MPR	MEDIUM PRESSURE STEAM RETURN
MPS	MEDIUM PRESSURE STEAM
MIN.	MINIMUM
NC	NORMALLY CLOSED
NO	NORMALLY OPEN
NOM.	NOMINAL
O/A	OUTDOOR AIR
OD	OUTER DIAMETER
P	PUMP
PC	PUMPED CONDENSATE
PD	PRESSURE DROP
PF	PRE-FILTER
PG	PROPYLENE GLYCOL-WATER SOLUTION
PH	PREHEAT
PRV	PRESSURE REDUCING VALVE
PT	PRESSURE/TEMPERATURE TAP
RA	RETURN AIR
RCU	RECIPROCATING CHILLER UNIT
RF	RETURN FAN
RH	REHEAT COIL
RH	RELATIVE HUMIDITY
RPM	REVOLUTIONS PER MINUTE
RRC	RETURN REGISTER CEILING
SA	SUPPLY AIR
SD	SMOKE DETECTOR
SDC	SUPPLY DIFFUSER CEILING
SDCP	SUPPLY DIFFUSER CEILING PERFORATED
SENS	SENSIBLE
SF	SUPPLY FAN
SP. GR.	SPECIFIC GRAVITY
SHT	SHEET
SP	STATIC PRESSURE
SPS	STATIC PRESSURE SENSOR
SS	STAINLESS STEEL
STM	STEAM
STR	STRAINER
TCV	TEMPERATURE CONTROL VALVE
TEMP	TEMPERATURE
TH	TOP HORIZONTAL
TOT	TOTAL
TSP	TOTAL STATIC PRESSURE
UH	UNIT HEATER
VAV	VARIABLE AIR VOLUME
VCD	VOLUME CONTROL DAMPER
VEL	VELOCITY
VFD	VARIABLE FREQUENCY DRIVE
VFS	VENTURI FLOW STATION
V1	VIBRATION ISOLATOR
VVB	VARIABLE VOLUME BOX
WB	WET BULB TEMPERATURE
WPD	WATER PRESSURE DROP
WTD	WATER TEMPERATURE DIFFERENCE
MOD	MOTOR OPERATED DAMPER

DRAWING SYMBOLS

2 / H4 — DETAIL NUMBER; DRAWING NUMBER WHERE DRAWN

A / H7 — SECTION LETTER; DRAWING NUMBER WHERE SHOWN

26-SF 3 — BUILDING NO. WHERE EQUIPMENT IS LOCATED; EQUIPMENT ABBREVIATION (SUPPLY FAN); SUPPLY FAN NO.3 IN BUILDING NO.26; TYPICAL UNIT NO.

OUTLINE OF PHASE

PIPING SYMBOLS

MPS	MEDIUM PRESSURE STEAM (16 PSIG THRU 59 PSIG)
MPR	MEDIUM PRESSURE STEAM CONDENSATE RETURN
LPS	LOW PRESSURE STEAM (15 PSIG AND BELOW)
LPR	LOW PRESSURE STEAM CONDENSATE RETURN
HWH	HOT WATER HEATING SUPPLY
HWHR	HOT WATER HEATING RETURN
GHS	HOT GLYCOL-WATER HEATING SUPPLY
GHR	HOT GLYCOL-WATER HEATING RETURN
V	VENT LINE
CH	CHILLED WATER SUPPLY
CHR	CHILLED WATER RETURN

VALVE SYMBOLS

	VALVE (SEE SPECIFICATIONS FOR TYPE)
	GLOBE VALVE
	GATE VALVE WITH 3/4 " HOSE ADAPTER
	CHECK VALVE
	ANGLE GLOBE VALVE
	BUTTERFLY VALVE
	BALL VALVE
	BALANCING VALVE
	STRAIGHT-THRU MODULATING CONTROL VALVE
	STRAIGHT-THRU TWO POSITION CONTROL VALVE
	THREE-WAY MODULATING CONTROL VALVE
	SAFETY OR PRESSURE RELIEF VALVE

GENERAL SYMBOLS

	DIRECTION OF PIPE PITCH (DOWN)
	DIRECTION OF FLOW
	ANCHOR
	REDUCER OR INCREASER
	ECCENTRIC REDUCER
	TOP CONNECTION, 45° OR 90°
	BOTTOM CONNECTION, 45° OR 90°
	SIDE CONNECTION
	CAPPED OUTLET
	RISE OR DROP IN PIPE
	UNION
	ORIFICE UNION
	POINT OF CONNECTION BETWEEN NEW AND EXISTING WORK
	LIMIT OF DEMOLITION
	FLOAT & THERMOSTATIC TRAP SET INCLUDING PIPING ACCESSORIES
	STRAINER
	THERMOMETER
	PRESSURE GAGE
	WATER FLOW MEASURING DEVICE
	EXISTING PIPE TO BE REMOVED
T	PNEUMATIC TSTAT TO BE REMOVED
H	PNEUMATIC HUMIDISTAT TO BE REMOVED
T	ELECTRONIC TSTAT
H	ELECTRONIC HUMIDISTAT
SD	DUCT MOUNTED SMOKE DETECTOR
SP	DUCT MOUNTED STATIC PRESURE SENSOR (AS SHOWN ON CONTROL DRAWINGS)

DUCTWORK SYMBOLS

UP / DN	SUPPLY DUCT (UP & DOWN)
UP / DN	EXHAUST DUCT (UP & DOWN)
	CEILING DIFFUSERS
	EXHAUST OR RETURN CEILING REGISTER OR GRILLE
	EXHAUST OR RETURN BOTTOM REGISTER OR GRILLE (WALL TYPE)
	EXHAUST OR RETURN REGISTER OR TOP GRILLE (WALL TYPE)
	VANED ELBOW & AIR SPLIT TYPE DUCT TAKE-OFF
	CONNECT NEW DUCT TO EXISTING DUCT
R	INCLINED RISE, IN DIRECTION OF AIR FLOW
D	INCLINED DROP, IN DIRECTION OF AIR FLOW
	LIMIT OF DEMOLITION
FC	FLEXIBLE CONNECTION
	VANED ELBOW (PROVIDE ALL SQUARE OR RECTANGULAR ELBOWS WITH VANES EVEN IF SYMBOL IS MISSING)
	VANED ELBOW (SHORT RADIUS)
	STANDARD RADIUS ELBOW
10x8	NEW DUCT (WIDTH x DEPTH)
10⌀	ROUND DUCT (DIAMETER)
10/8	FLAT OVAL (SHOWN / HIDDEN)
10x8	DUCT (SHOWN x HIDDEN)
	FLEXIBLE DUCTWORK
	EXISTING DUCT TO REMAIN
	EXISTING DUCT TO BE REMOVED
	LOUVER (LOUVER SPECIFIED IN ARCHITECTURAL SECTION.)
	FLEXIBLE DUCTWORK (INSULATED)
VD	MANUAL VOLUME DAMPER
	STAINLESS STEEL DUCT
45° SUPPLY	STANDARD BRANCH SUPPLY OR RETURN, NO SPLITTER (45° TAP)
45° RETURN	
M	MOTOR OPERATED DAMPER
F	FIRE DAMPER
S	SMOKE DAMPER
C	COMBINATION FIRE/SMOKE DAMPER

GENERAL NOTES

1. ALL PIPING AND DUCTS IN FINISHED ROOMS OR SPACES SHALL BE CONCEALED IN FURRED CHASES OR ABOVE CEILING.
2. FIRST FIGURE OF DUCT SIZE INDICATES DIMENSION OF FACE SHOWN OR INDICATED.
3. ACCESS PANELS IN UN-ACCESSIBLE CEILINGS ARE REQUIRED FOR ALL VALVES, TRAPS, DAMPERS, CLEANOUTS, CONTROLS, ETC., AND SHALL BE FURNISHED AND INSTALLED UNDER ARCHITECTURAL SPECIFICATIONS.
4. TOTAL STATIC PRESSURE NOTED IN SCHEDULES INCLUDES DUCT SYSTEM, TERMINAL UNITS, FILTERS, COILS, ETC.
5. FOR TYPICAL STEAM AND WATER PIPING CONNECTIONS TO EQUIPMENT, SEE STANDARD DETAILS.
6. WATER PIPE CONNECTIONS TO AIR HEATING AND COOLING COILS SHALL BE MADE SO THERE WILL BE COUNTER FLOW BETWEEN WATER AND AIR.
7. ALL TEMPERATURE AND HUMIDITY CONTROLLERS SHALL BE PROVIDED WITH OPERATORS TO PROVIDE PROPER OPERATION OF VALVES.
8. PROVIDE ENERGY EFFICIENT MOTORS FOR ALL EQUIPMENT REQUIRING MOTORS 1.0 HP AND ABOVE. (EXCEPT MOTORS WITH VARIABLE SPEED CONTROL).
9. ALL EXISTING FLOOR AND WALL OPENINGS SHALL BE PATCHED AS DESCRIBED IN THE SPECIFICATION AND AS DETAILED ON THE DRAWINGS.
10. SET ALL FLOOR DRAINS AND FUNNEL DRAINS OVER P-TRAPS.
11. AT LOCATIONS INDICATED TO CONNECT NEW LINES, THE CONTRACTOR SHALL DETERMINE THE EXACT LOCATION, SIZE, AND ELEVATION AT THE SITE BEFORE INSTALLATION OF NEW LINES.
12. AT LOCATIONS INDICATED TO CONNECT NEW WATER LINES TO EXISTING WATER LINES. THE CONTRACTOR SHALL DETERMINE THE EXACT LOCATION AND SIZE OF THE EXISTING LINE AT THE SITE BEFORE INSTALLING NEW LINES.
13. THE CONTRACTOR SHALL PROVIDE AND INSTALL APPROVED PIPE SLEEVES AND FIRE STOPPING AT ALL NEW AND EXISTING FLOOR/ CEILING SLAB AND WALL PENETRATIONS WITHIN THE LIMITS OF THE CONTRACT WORK AREA TO MAINTAIN THE RATED CONSTRUCTION SPECIFIED. REFER TO DETAILS.
14. REFER TO ARCHITECTURAL SPECIFICATIONS AND DRAWINGS FOR PHASING OF CONSTRUCTION, ICRA REQUIREMENTS AND CONSTRUCTION AREA RESTRICTIONS/REQUIREMENTS.
15. REFER TO SPECIFICATIONS FOR PHASING OF CONSTRUCTION AND CONSTRUCTION AREA RESTRICTIONS/REQUIREMENTS.
16. DIFFUSER, REGISTER AND GRILLE SIZES SHOWN ON FLOOR PLANS ARE NECK SIZES.
17. WALL TYPE EXHAUST REGISTERS NOTED AS "BR" ON DRAWINGS ARE TO BE INSTALLED WITH BOTTOM ELEVATION OF REGISTER AT 7" [178mm] ABOVE FINISHED FLOOR.
18. REFER TO ARCHITECTURAL REFLECTED CEILING PLANS FOR EXACT LOCATIONS OF CEILING DIFFUSERS, REGISTERS, AND GRILLES.
19. ALL ITEMS HUNG FROM THE UTILITY FLOOR HAVING A LOAD GREATER THAN 70 POUNDS SHALL BE SUPPORTED FROM THE STEEL FRAMING MEMBERS AND NOT FROM THE UTILITY FLOOR SLAB OR STEEL DECK.
20. REMOVE ASSOCIATED THERMOSTATS AND CAP PNEUMATIC TUBING BACK TO NEAREST MAIN FOR ALL CVB/VVBS THAT ARE REMOVED DURING DEMOLITION.

FULLY SPRINKLERED
ISSUED FOR BID

Revisions | Date

CONSULTANTS:

MEP AND STRUCTURAL ENGINEER
H.F. LENZ COMPANY
1407 Scalp Avenue
Johnstown, PA 15904
Tel (814) 269-9300
www.hflenz.com

KEY PLAN:

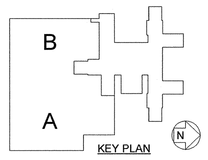

KEY PLAN

COMMONWEALTH OF PENNSYLVANIA
REGISTERED PROFESSIONAL
TIMOTHY M. EARHART
ENGINEER
No. PE-041717-E

ARCHITECT:

ARCHITECT
VDG
Vision Design Group
2200 Dunbarton Drive Suite F
Chesapeake, VA 23325
Tel (757) 477-8600

ENVIRONMENTAL CONSULTANT
Earth Smart Environmental Solutions, LLC
232 S. Dillard Street, Suite 230
Winter Garden, FL 34787-3516

Project Number	Scale
	As indicated

Drawing Title: MECHANICAL NOTES, SYMBOLS, AND ABBREVIATIONS

Approved: Project Director

Project Title: REPLACEMENT OF AC-27

Locat: 3900 WOODLAND AVENUE PHILADELPHIA, PA 19104

Date	Checked	Drawn
10/26/12	TME	RWB

VA Project Number: 642-11-160
Building Number: 2
Drawing Number: MG-AC27-001
Dwg. 4 of 24

Office of Facilities Management
Department of Veterans Affairs

VA FORM 08-6231, OCT 1978

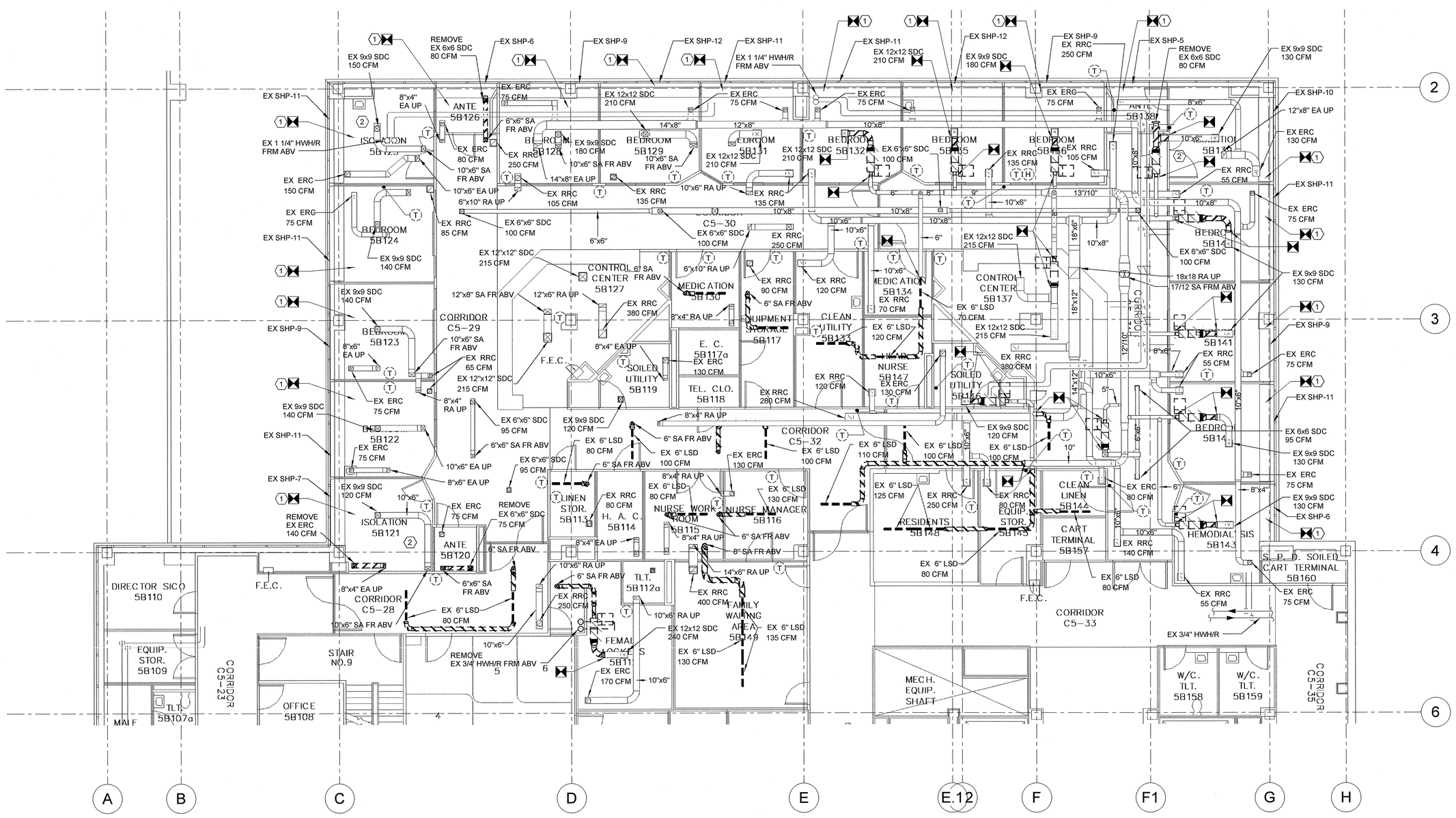

1 PARTIAL FIFTH FLOOR PLAN UNIT "B" MECHANICAL DEMOLITION
SCALE: 1/8" = 1'-0"

GENERAL NOTES THIS DRAWING

1. ALL CRANE LIFTS ASSOCIATED WITH ALL PHASES OF WORK, INCLUDING BUT NOT LIMITED TO DELIVERY OF TEMPORARY UNITS, REMOVAL OF EXISTING UNITS, AND DELIVERY OF NEW UNITS SHALL BE PERFORMED ON WEEKENDS.
2. ANY UNIT SHUT-DOWNS REQUIRED SHALL BE SCHEDULED IN ADVANCE WITH FACILITIES ENGINEERING GROUP.
3. MEASURE AND RECORD AIRFLOWS OF UNITS PRIOR TO DEMOLITION.
4. CONTRACTOR SHALL VERIFY THAT NOT MORE THAN EXISTING AC AND RAF SYSTEMS ARE CONNECTED TO THE EXISTING ATC PANELS BEFORE DEMOLITION. PANEL SHALL REMAIN IN PLACE IF OTHER EQUIPMENT NOT DEMOLISHED UNDER THIS PROJECT IS SERVED FROM THIS PANEL.
5. SOME AREAS MAY REQUIRE TO BE OUT OF SERVICE FOR AN EXTENDED PERIOD OF TIME. THE GENERAL CONTRACTOR SHALL IDENTIFY THESE AREAS AND COORDINATE DOWNTIME WITH FACILITIES STAFF.
6. PRIOR TO START OF CONSTRUCTION, THE CONTRACTOR SHALL SUBMIT A SCHEDULE FOR THE ENTIRE PROJECT INDICATING TOTAL LENGTH OF TIME FOR THE PROJECT, ESTIMATED AREA SHUT DOWNS, AND PHASES OF WORK.

GENERAL DEMOLITION NOTES THIS DRAWING

1. ALL DEMOLITION AND NEW WORK ASSOCIATED WITH THE PATIENT ROOMS SHALL BE PERFORMED ON A ROOM BY ROOM BASIS, SUCH THAT ONLY ONE IS OUT OF SERVICE AT A TIME UNLESS OTHERWISE DIRECTED BY THE VA PROJECT ENGINEER. ALL WORK, CLEANUP, AND SYSTEMS SHALL BE RETURNED TO FULL OPERATION BEFORE MOVING TO THE NEXT PATIENT ROOM. COORDINATE SCHEDULING OF ROOM SHUTDOWN WITH FACILITIES STAFF.
2. ALL WORK ASSOCIATED WITH THE PATIENT ROOMS AND PATIENT AREAS SHALL BE PERFORMED AS AFTER HOURS WORK. ALL OTHER WORK MAY BE PERFORMED DURING NORMAL BUSINESS HOURS UNLESS NOTED OTHERWISE.
3. THE MECHANICAL CONTRACTOR SHALL LOCALLY CLEAN THE AFFECTED AREAS OF ALL DUCT/PIPE DISTURBANCES.
4. REMOVE EXISTING TERMINAL AIR BOX, SUPPLY AIR DUCTWORK, AND HOT WATER HEATING SUPPLY AND RETURN BRANCH PIPING (NOT SHOWN) CROSSHATCHED BETWEEN THE POINTS OF DISCONNECT SYMBOLS INCLUDING ALL ASSOCIATED CONTROLS WITH ACCESSORIES.
5. LINEAR MODULINE DIFFUSERS NOTED TO BE DEMOLISHED SHALL INCLUDE REMOVAL OF PNUEMATIC TSTAT. CAP TUBING BACK TO NEAREST MAIN.

⬡ - MECHANICAL KEYNOTES

1	REMOVE EXISTING PNUEMATIC ATC VALVE ASSOCIATED WITH RADIANT HEATING PANEL. REMOVE TSTAT AND CAP PNUEMATIC BRANCH TUBING BACK TO NEAREST MAIN.
2	REMOVE EXISTING ROOM PRESSURE MONITOR.

FULLY SPRINKLERED
ISSUED FOR BID

Revisions	Date

CONSULTANTS:

MEP AND STRUCTURAL ENGINEER
H.F. LENZ COMPANY
1407 Scalp Avenue
Johnstown, PA 15904
Tel (814) 269-9300
www.hflenz.com

KEY PLAN:

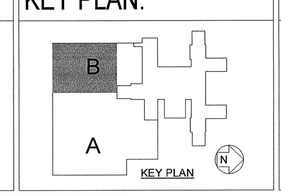

COMMONWEALTH OF PENNSYLVANIA
REGISTERED PROFESSIONAL
TIMOTHY M. EARHART
ENGINEER
No. PE041037-E

ARCHITECT:

ARCHITECT
VDG
Vision Design Group
2200 Dunbarton Drive Suite F
Chesapeake, VA 23325
Tel (757) 477-8600

ENVIRONMENTAL CONSULTANT
Earth Smart Environmental Solutions, LLC
232 S. Dillard Street, Suite 230
Winter Garden, FL 34787-3516

Project Number	Scale
	As indicate

Drawing Title	PARTIAL FIFTH FLOOR PLAN UNIT "B" MECHANICAL DEMOLITION
Approved: Project Director	
Project Title	REPLACEMENT OF AC-27
Locat	3900 WOODLAND AVENUE PHILADELPHIA, PA 19104
Date	10/26/12
Checked	TME
Drawn	RWB
VA Project Number	642-11-160
Building Number	2
Drawing Number	MH-AC27-101
Dwg.	5 of 24

Office of Facilities Management
Department of Veterans Affairs

VA FORM 08-6231, OCT 1978

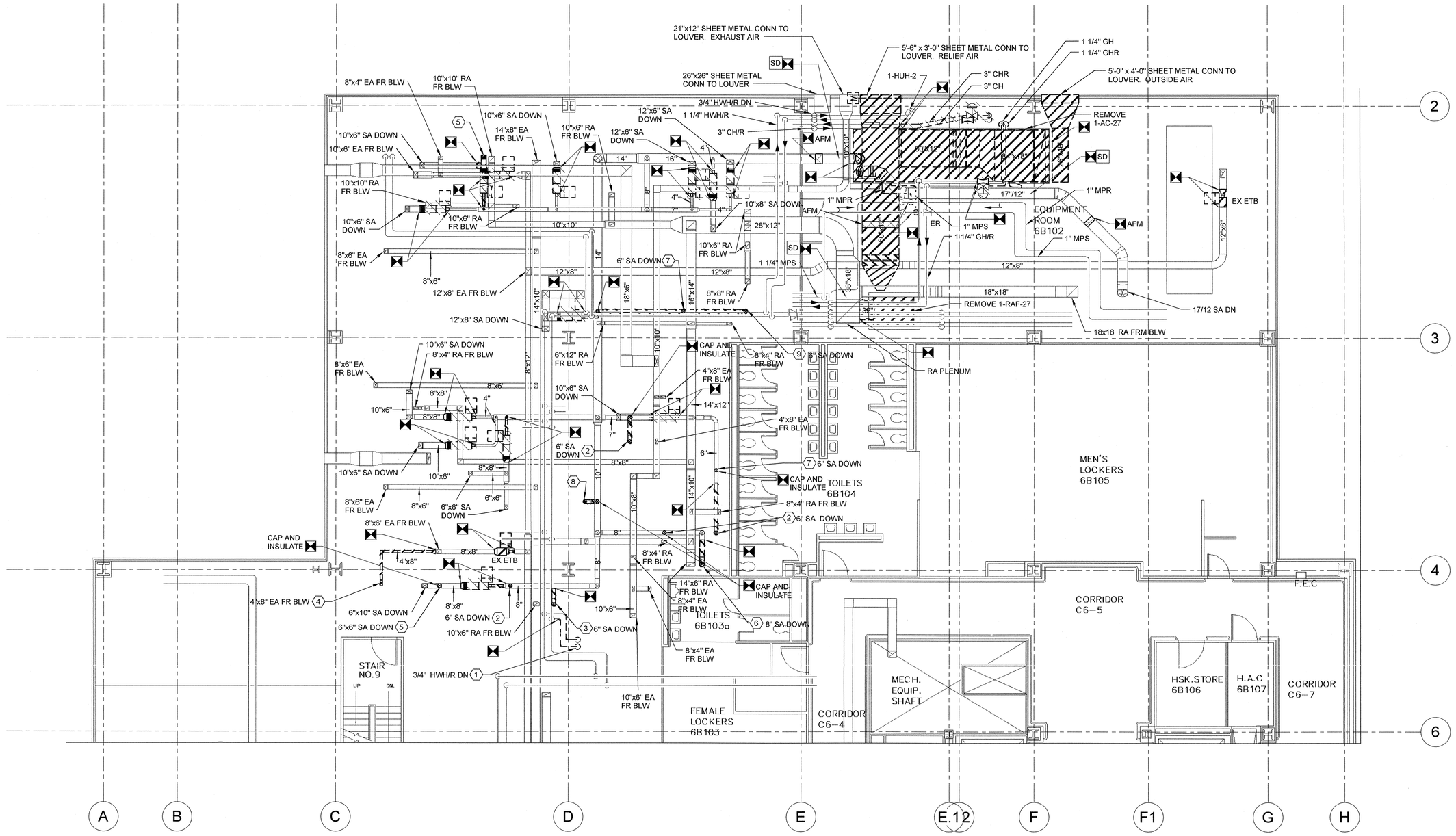

1 PARTIAL SIXTH FLOOR PLAN UNIT "B" MECHANICAL DEMOLITION

SCALE: 1/8" = 1'-0"

GENERAL NOTES THIS DRAWING

1. ALL CRANE LIFTS ASSOCIATED WITH ALL PHASES OF WORK, INCLUDING BUT NOT LIMITED TO DELIVERY OF TEMPORARY UNITS, REMOVAL OF EXISTING UNITS, AND DELIVERY OF NEW UNITS SHALL BE PERFORMED ON WEEKENDS.
2. ANY UNIT SHUT-DOWNS REQUIRED SHALL BE SCHEDULED IN ADVANCE WITH FACILITIES ENGINEERING GROUP.
3. MEASURE AND RECORD AIRFLOWS OF UNITS PRIOR TO DEMOLITION.
4. CONTRACTOR SHALL VERIFY THAT NOT MORE THAN EXISTING AC AND RAF SYSTEMS ARE CONNECTED TO THE EXISTING ATC PANELS BEFORE DEMOLITION. PANEL SHALL REMAIN IN PLACE IF OTHER EQUIPMENT NOT DEMOLISHED UNDER THIS PROJECT IS SERVED FROM THIS PANEL.
5. SOME AREAS MAY REQUIRE TO BE OUT OF SERVICE FOR AN EXTENDED PERIOD OF TIME. THE GENERAL CONTRACTOR SHALL IDENTIFY THESE AREAS AND COORDINATE DOWNTIME WITH FACILITIES STAFF.
6. PRIOR TO START OF CONSTRUCTION, THE CONTRACTOR SHALL SUBMIT A SCHEDULE FOR THE ENTIRE PROJECT INDICATING TOTAL LENGTH OF TIME FOR THE PROJECT, ESTIMATED AREA SHUT DOWNS, AND PHASES OF WORK.

GENERAL DEMOLITION NOTES THIS DRAWING

1. ALL DEMOLITION AND NEW WORK ASSOCIATED WITH THE PATIENT ROOMS SHALL BE PERFORMED ON A ROOM BY ROOM BASIS. SUCH THAT ONLY ONE IS OUT OF SERVICE AT A TIME UNLESS OTHERWISE DIRECTED BY THE VA PROJECT ENGINEER. ALL WORK, CLEANUP, AND SYSTEMS SHALL BE RETURNED TO FULL OPERATION BEFORE MOVING TO THE NEXT PATIENT ROOM. COORDINATE SCHEDULING OF ROOM SHUTDOWN WITH FACILITIES STAFF.
2. ALL WORK ASSOCIATED WITH THE PATIENT ROOMS AND PATIENT AREAS SHALL BE PERFORMED AS AFTER HOURS WORK. ALL OTHER WORK MAY BE PERFORMED DURING NORMAL BUSINESS HOURS UNLESS NOTED OTHERWISE.
3. THE MECHANICAL CONTRACTOR SHALL LOCALLY CLEAN THE AFFECTED AREAS OF ALL DUCT/PIPE DISTURBANCES.
4. REMOVE EXISTING TERMINAL AIR BOX, SUPPLY AIR DUCTWORK, AND HOT WATER HEATING SUPPLY AND RETURN BRANCH PIPING (NOT SHOWN) CROSSHATCHED BETWEEN THE POINTS OF DISCONNECT SYMBOLS INCLUDING ALL ASSOCIATED CONTROLS WITH ACCESSORIES.

GENERAL TEMPORARY UNIT NOTES THIS DRAWING

1. EXISTING AIR HANDLING UNIT 1-AC-27 MUST REMAIN FULLY OPERATIONAL UNTIL THE TEMPORARY AIR HANDLING UNIT 1-TEMPAC-27 IS IN PLACE AND IS READY FOR THE SWITCH OVER FROM THE EXISTING UNIT TO THE TEMPORARY UNIT. THE SWITCH OVER WILL BE PERFORMED AS WEEKEND WORK, AND MUST BE COMPLETED BEFORE HOSPITAL OPERATING HOURS START ON MONDAY MORNING. SWITCH OVER TO BE COORDINATED WITH FACILITIES ENGINEERING GROUP.
2. THE 1 1/4" GLYCOL HEATING HOT WATER VALVES WILL REMAIN CLOSED DURING THE OPERATION AND USE OF 1-TEMPAC-27 UNLESS HEATING IS A PRIORITY. IN THAT CASE, THE TEMPORARY 1 1/4" GLYCOL WATER FLEX HOSES WILL BE CONNECTED TO THE 1 1/4" GH&R PIPING AND VALVES SHALL BE OPENED. WHEN IN THE HEATING MODE, THE CONTRACTOR SHALL BE RESPONSIBLE FOR ALL FREEZE PROTECTION OF PIPING. THE MECHANICAL CONTRACTOR SHALL ADJUST VALVING TO MAINTAIN A LEAVING AIR TEMPERATURE OF 55°F.
3. THE 3" CHILLED WATER VALVES WILL REMAIN OPEN DURING THE OPERATION AND USE OF 1-TEMPAC-27 UNLESS HEATING IS A PRIORITY. IN THAT CASE, THE VALVES WILL BE CLOSED. THE MECHANICAL CONTRACTOR SHALL ADJUST VALVING TO MAINTAIN A LEAVING AIR TEMPERATURE OF 55°F.
4. SUPPORT OF THE TEMPORARY UNIT SHALL NOT DAMAGE THE EXISTING ROOF. ANY DAMAGE TO THE EXISTING ROOF BY THE CONTRACTOR SHALL BE THE RESPONSIBILITY OF THE CONTRACTOR TO REPAIR AND TO MATCH EXISTING CONDITIONS APPROVED BY THE FACILITIES ENGINEERING GROUP.
5. TEMPORARY FINAL FILTER HOUSING WITH SIDE ACCESS. FILTER HOUSING WILL HOUSE (10) 24x24x12 99.97% VA GRADE HEPA CARTRIDGE TYPE FILTERS. THE HOUSING WILL BE FITTED WITH TWO (2) 16Ø DUCT COLLAR CONNECTIONS. THE HOUSING WILL BE SECURED WITH SUPPORT RAILS THAT WILL REST ON THE BUILDING ROOF.

- MECHANICAL KEYNOTES

1	PATCH TWO (2) 3/4"Ø OPENINGS. REFER TO UTILITY FLOOR INFILL DETAIL.
2	ENLARGE OPENING FROM 6"Ø TO FIT 8x8 DUCT W/ INSULATION. REFER TO UTILITY FLOOR OPENING DETAIL.
3	ENLARGE OPENING FROM 6"Ø TO FIT 10x6 DUCT W/ INSULATION. REFER TO UTILITY FLOOR OPENING DETAIL.
4	ENLARGE OPENING FROM 8x4 TO FIT 8x8 DUCT. REFER TO UTILITY FLOOR OPENING DETAIL.
5	PATCH 6x6 OPENING. REFER TO UTILITY FLOOR INFILL DETAIL.
6	ENLARGE OPENING FROM 8"Ø TO FIT 10x10 DUCT W/ INSULATION. REFER TO UTILITY FLOOR OPENING DETAIL.
7	PATCH 6"Ø OPENING. REFER TO UTILITY FLOOR INFILL DETAIL.
8	ENLARGE OPENING FROM 6"Ø TO FIT 6x6 DUCT W/ INSULATION. REFER TO UTILITY FLOOR OPENING DETAIL.
9	ENLARGE OPENING FROM 6"Ø TO FIT 10x10 DUCT W/ INSULATION. REFER TO UTILITY FLOOR OPENING DETAIL.

FULLY SPRINKLERED
ISSUED FOR BID

Revisions	Date

CONSULTANTS:

MEP AND STRUCTURAL ENGINEER

H.F. LENZ COMPANY
1407 Scalp Avenue
Johnstown, PA 15904
Tel (814) 269-9300
www.hflenz.com

KEY PLAN:

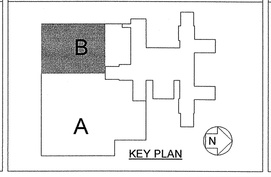

COMMONWEALTH OF PENNSYLVANIA
REGISTERED PROFESSIONAL ENGINEER
TIMOTHY M. EARHART
No. PE 041227-E

ARCHITECT:

ARCHITECT
Vision Design Group
2299 Dunbarton Drive Suite F
Chesapeake, VA 23325
Tel (757) 477-8600

ENVIRONMENTAL CONSULTANT
Earth Smart Environmental Solutions, LLC
232 S. Dillard Street, Suite 230
Winter Garden, FL 34787-3516

Project Number	Scale
	As indicated

Drawing Title: PARTIAL SIXTH FLOOR PLAN UNIT "B" MECHANICAL DEMOLITION

Approved: Project Director

Project Title: REPLACEMENT OF AC-27

Locat: 3900 WOODLAND AVENUE PHILADELPHIA, PA 19104

Date	Checked	Drawn
10/26/12	TME	RWB

VA Project Number: 642-11-160

Building Number: 2

Drawing Number: MH-AC27-102

Dwg. 6 of 24

Office of Facilities Management

Department of Veterans Affairs

VA FORM 08-6231, OCT 1978

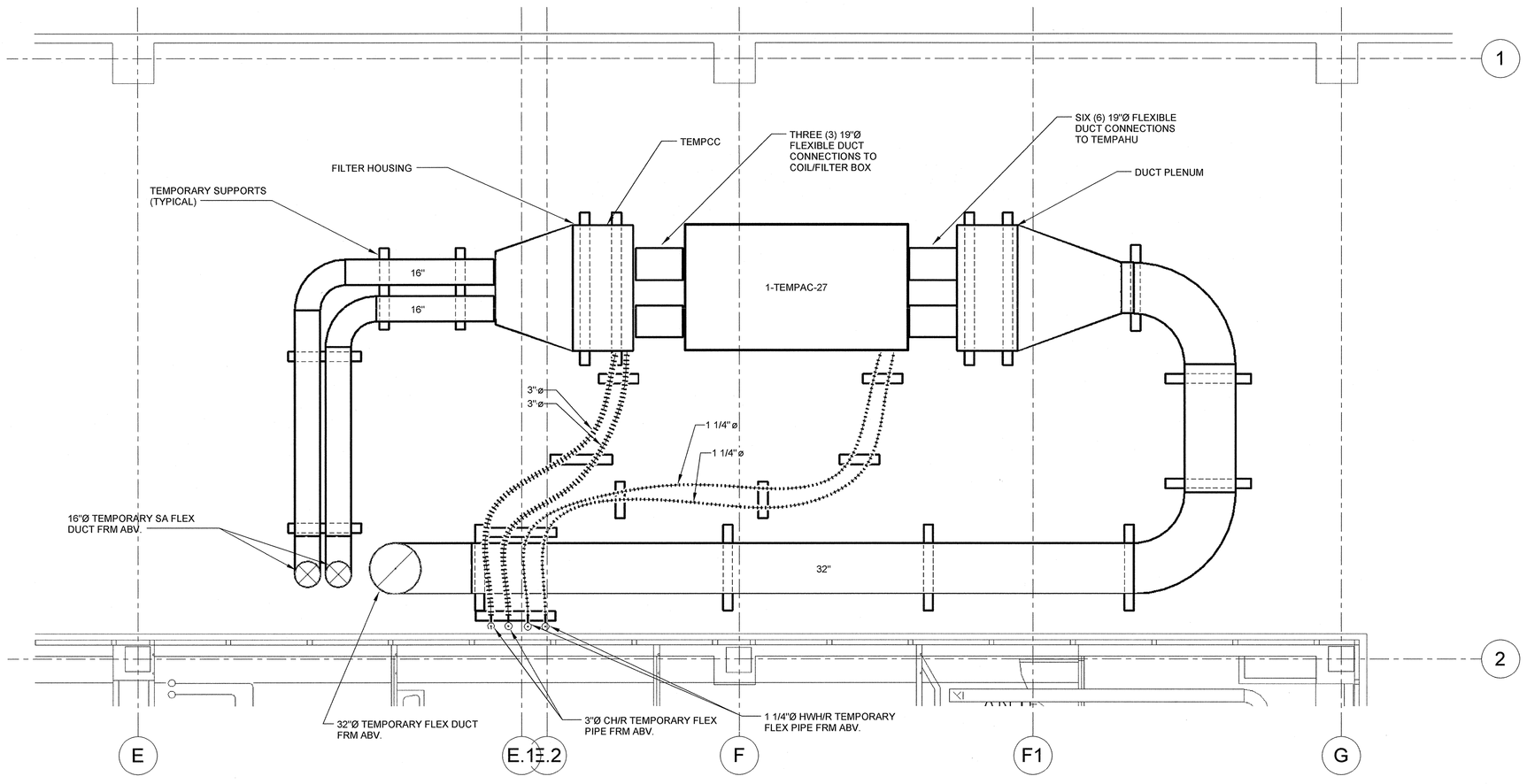

1 PARTIAL FOURTH FLOOR ROOF PLAN UNIT "B" MECHANICAL
SCALE: 1/4" = 1'-0"

GENERAL NOTES THIS DRAWING

1. ALL CRANE LIFTS ASSOCIATED WITH ALL PHASES OF WORK, INCLUDING BUT NOT LIMITED TO DELIVERY OF TEMPORARY UNITS, REMOVAL OF EXISTING UNITS, AND DELIVERY OF NEW UNITS SHALL BE PERFORMED ON WEEKENDS.
2. ANY UNIT SHUT-DOWNS REQUIRED SHALL BE SCHEDULED IN ADVANCE WITH FACILITIES ENGINEERING GROUP.
3. MEASURE AND RECORD AIRFLOWS OF UNITS PRIOR TO DEMOLITION.
4. CONTRACTOR SHALL VERIFY THAT NOT MORE THAN EXISTING AC AND RAF SYSTEMS ARE CONNECTED TO THE EXISTING ATC PANELS BEFORE DEMOLITION. PANEL SHALL REMAIN IN PLACE IF OTHER EQUIPMENT NOT DEMOLISHED UNDER THIS PROJECT IS SERVED FROM THIS PANEL.
5. PRIOR TO START OF CONSTRUCTION, THE CONTRACTOR SHALL SUBMIT A SCHEDULE FOR THE ENTIRE PROJECT INDICATING TOTAL LENGTH OF TIME FOR THE PROJECT, ESTIMATED AREA SHUT DOWNS, AND PHASES OF WORK.

GENERAL DEMOLITION NOTES THIS DRAWING

1. ALL DEMOLITION AND NEW WORK ASSOCIATED WITH THE PATIENT ROOMS SHALL BE PERFORMED ON A ROOM BY ROOM BASIS, SUCH THAT ONLY ONE IS OUT OF SERVICE AT A TIME UNLESS OTHERWISE DIRECTED BY THE VA PROJECT ENGINEER. ALL WORK, CLEANUP, AND SYSTEMS SHALL BE RETURNED TO FULL OPERATION BEFORE MOVING TO THE NEXT PATIENT ROOM. COORDINATE SCHEDULING OF ROOM SHUTDOWN WITH FACILITIES STAFF.
2. ALL WORK ASSOCIATED WITH THE PATIENT ROOMS AND PATIENT AREAS SHALL BE PERFORMED AS AFTER HOURS WORK. ALL OTHER WORK MAY BE PERFORMED DURING NORMAL BUSINESS HOURS UNLESS NOTED OTHERWISE.
3. THE MECHANICAL CONTRACTOR SHALL LOCALLY CLEAN THE AFFECTED AREAS OF ALL DUCT/PIPE DISTURBANCES.

GENERAL TEMPORARY UNIT NOTES THIS DRAWING

1. EXISTING AIR HANDLING UNIT 1-AC-27 MUST REMAIN FULLY OPERATIONAL UNTIL THE TEMPORARY AIR HANDLING UNIT 1-TEMPAC-27 IS IN PLACE AND IS READY FOR THE SWITCH OVER FROM THE EXISTING UNIT TO THE TEMPORARY UNIT. THE SWITCH OVER WILL BE PERFORMED AS WEEKEND WORK, AND MUST BE COMPLETED BEFORE HOSPITAL OPERATING HOURS START ON MONDAY MORNING. SWITCH OVER TO BE COORDINATED WITH FACILITIES ENGINEERING GROUP.
2. THE 1 1/4" GLYCOL HEATING HOT WATER VALVES WILL REMAIN CLOSED DURING THE OPERATION AND USE OF 1-TEMPAC-27 UNLESS HEATING IS A PRIORITY. IN THAT CASE, THE TEMPORARY 1 1/4" GLYCOL WATER FLEX HOSES WILL BE CONNECTED TO THE 1 1/4" GH&R PIPING AND VALVES SHALL BE OPENED. WHEN IN THE HEATING MODE, THE CONTRACTOR SHALL BE RESPONSIBLE FOR ALL FREEZE PROTECTION OF PIPING. THE MECHANICAL CONTRACTOR SHALL ADJUST VALVING TO MAINTAIN A LEAVING AIR TEMPERATURE OF 55°F.
3. THE 3" CHILLED WATER VALVES WILL REMAIN OPEN DURING THE OPERATION AND USE OF 1-TEMPAC-27 UNLESS HEATING IS A PRIORITY. IN THAT CASE, THE VALVES WILL BE CLOSED. THE MECHANICAL CONTRACTOR SHALL ADJUST VALVING TO MAINTAIN A LEAVING AIR TEMPERATURE OF 55°F.
4. SUPPORT OF THE TEMPORARY UNIT SHALL NOT DAMAGE THE EXISTING ROOF. ANY DAMAGE TO THE EXISTING ROOF BY THE CONTRACTOR SHALL BE THE RESPONSIBILITY OF THE CONTRACTOR TO REPAIR AND TO MATCH EXISTING CONDITIONS APPROVED BY THE FACILITIES ENGINEERING GROUP.
5. TEMPORARY FINAL FILTER HOUSING WITH SIDE ACCESS. FILTER HOUSING WILL HOUSE (4) 24x24x12 99.97% VA GRADE HEPA CARTRIDGE TYPE FILTERS. THE HOUSING WILL BE FITTED WITH TWO (2) 16Ø DUCT COLLAR CONNECTIONS. THE HOUSING WILL BE SECURED WITH SUPPORT RAILS THAT WILL REST ON THE BUILDING ROOF.

FULLY SPRINKLERED
ISSUED FOR BID

Revisions	Date

CONSULTANTS:

MEP AND STRUCTURAL ENGINEER
H.F. LENZ COMPANY
1407 Scalp Avenue
Johnstown, PA 15904
Tel (814) 269-9300
www.hflenz.com

KEY PLAN:

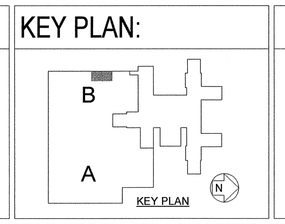

COMMONWEALTH OF PENNSYLVANIA
REGISTERED PROFESSIONAL ENGINEER
TIMOTHY M. EARHART
No. PE 041237-E

ARCHITECT:

ARCHITECT
VDG
Vision Design Group
2200 Dunbarton Drive Suite F
Chesapeake, VA 23325
Tel (757) 477-8600

ENVIRONMENTAL CONSULTANT
Earth Smart
Environmental Solutions
Earth Smart Environmental Solutions, LLC
232 S. Dillard Street, Suite 230
Winter Garden, FL 34787-3516

Project Number	Scale
	As indicated

Drawing Title: PARTIAL FOURTH FLOOR ROOF PLAN UNIT "B" MECHANICAL - TEMPORARY UNIT

Approved: Project Director

Project Title: REPLACEMENT OF AC-27

Locat: 3900 WOODLAND AVENUE PHILADELPHIA, PA 19104

Date	Checked	Drawn
10/26/12	TME	RWB

VA Project Number: 642-11-160
Building Number: 2
Drawing Number: MH-AC27-103
Dwg. 7 of 24

Office of Facilities Management
Department of Veterans Affairs

VA FORM 08-6231, OCT 1978

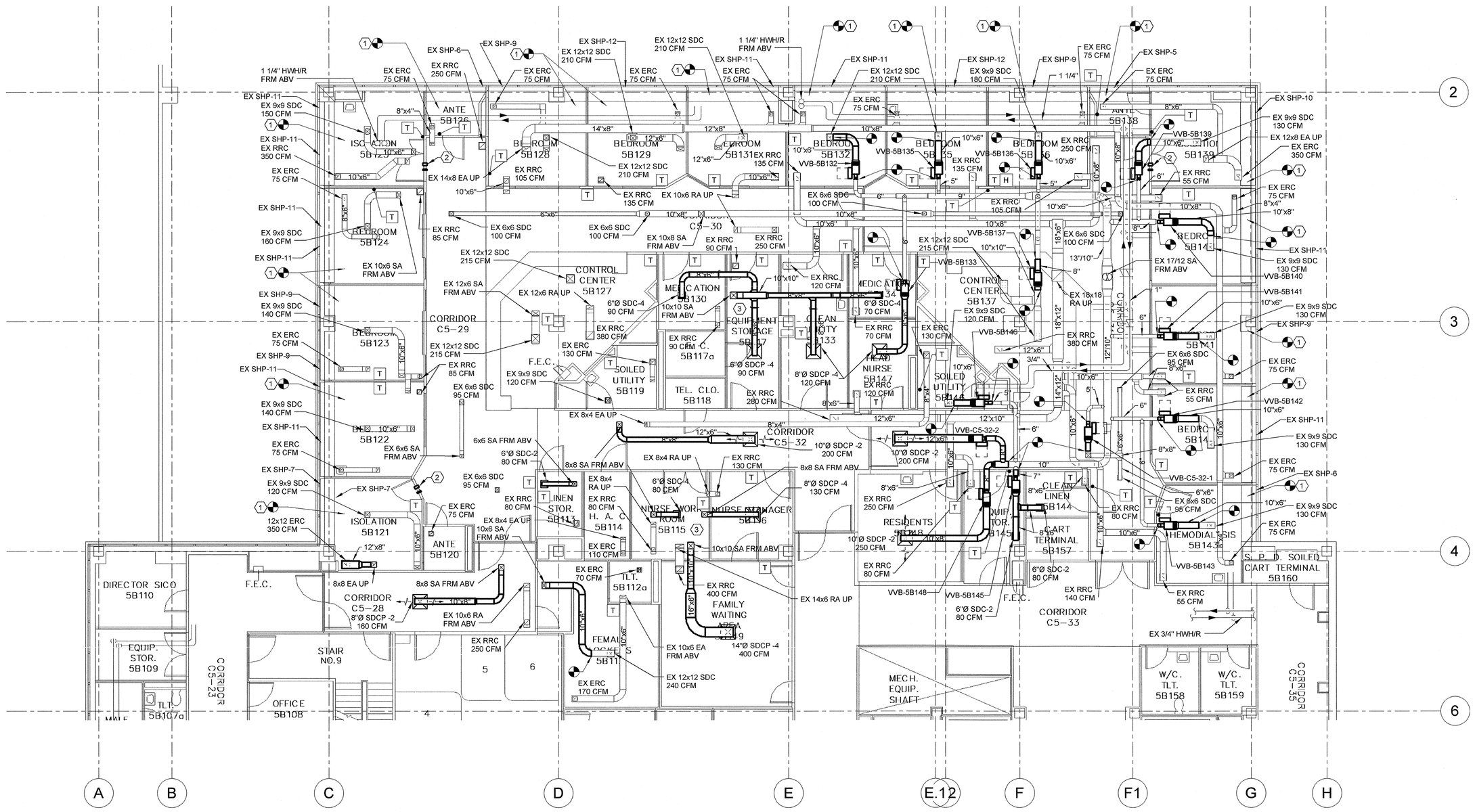

1 PARTIAL FIFTH FLOOR PLAN UNIT "B" MECHANICAL NEW WORK
SCALE: 1/8" = 1'-0"

GENERAL NOTES THIS DRAWING

1. ALL CRANE LIFTS ASSOCIATED WITH ALL PHASES OF WORK, INCLUDING BUT NOT LIMITED TO DELIVERY OF TEMPORARY UNITS, REMOVAL OF EXISTING UNITS, AND DELIVERY OF NEW UNITS SHALL BE PERFORMED ON WEEKENDS.
2. ANY UNIT SHUT-DOWNS REQUIRED SHALL BE SCHEDULED IN ADVANCE WITH FACILITIES ENGINEERING GROUP.
3. MEASURE AND RECORD AIRFLOWS OF UNITS PRIOR TO DEMOLITION.
4. CONTRACTOR SHALL VERIFY THAT NOT MORE THAN EXISTING AC AND RAF SYSTEMS ARE CONNECTED TO THE EXISTING ATC PANELS BEFORE DEMOLITION. PANEL SHALL REMAIN IN PLACE IF OTHER EQUIPMENT NOT DEMOLISHED UNDER THIS PROJECT IS SERVED FROM THIS PANEL.
5. SOME AREAS MAY REQUIRE TO BE OUT OF SERVICE FOR AN EXTENDED PERIOD OF TIME. THE GENERAL CONTRACTOR SHALL IDENTIFY THESE AREAS AND COORDINATE DOWNTIME WITH FACILITIES STAFF.
6. PRIOR TO START OF CONSTRUCTION, THE CONTRACTOR SHALL SUBMIT A SCHEDULE FOR THE ENTIRE PROJECT INDICATING TOTAL LENGTH OF TIME FOR THE PROJECT, ESTIMATED AREA SHUT DOWNS, AND PHASES OF WORK.

GENERAL NEW WORK NOTES THIS DRAWING

1. ALL DEMOLITION AND NEW WORK ASSOCIATED WITH THE PATIENT ROOMS SHALL BE PERFORMED ON A ROOM BY ROOM BASIS, SUCH THAT ONLY ONE IS OUT OF SERVICE AT A TIME UNLESS OTHERWISE DIRECTED BY THE VA PROJECT ENGINEER. ALL WORK, CLEANUP, AND SYSTEMS SHALL BE RETURNED TO FULL OPERATION BEFORE MOVING TO THE NEXT PATIENT ROOM. COORDINATE SCHEDULING OF ROOM SHUTDOWN WITH FACILITIES STAFF.
2. ALL WORK ASSOCIATED WITH THE PATIENT ROOMS AND PATIENT AREAS SHALL BE PERFORMED AS AFTER HOURS WORK. ALL OTHER WORK MAY BE PERFORMED DURING NORMAL BUSINESS HOURS UNLESS NOTED OTHERWISE.
3. THE MECHANICAL CONTRACTOR SHALL LOCALLY CLEAN THE AFFECTED AREAS OF ALL DUCT/PIPE DISTURBANCES.
4. FURNISH NEW TERMINAL AIR BOX AND SUPPLY/RETURN/EXHAUST AIR DUCTWORK BETWEEN THE POINTS OF NEW TO EXISTING CONNECTION SYMBOLS. FURNISH NEW HOT WATER HEATING SUPPLY AND RETURN PIPING INCLUDING NEW VALVES AND ACCESORIES AS SHOWN ON THE DETAIL AND CONNECT TO NEAREST MAIN.
5. PROVIDE NEW DIRECT DIGITAL CONTROL ADJUSTABLE TEMPERATURE SENSOR TO CONTROL ASSOCIATED VVB TERMINAL DEVICE.
6. REPLACE OR REPAIR ALL WORN/TORN INSULATION OF THE PIPING AND DUCTWORK ASSOCIATED WITH 1-AC-27 AND 1-RAF-27.
7. NEW DIFFUSER/REGISTER LOCATIONS SHALL BE COORDINATED WITH EXISTING CEILING GRID.

⬡ - MECHANICAL KEYNOTES

1	NEW ATC VALVE. COORDINATE WITH VVB BOX REHEAT CONTROL AS REQUIRED. REFER TO SCHEDULE SHEET FOR UNIT GPM.
2	VISUAL AND DIGITAL ROOM PRESSURE MONITOR.
3	THIS AREA MAY REQUIRE A SIGNIFICANT AMOUNT OF DOWNTIME. COORDINATE CONSTRUCTION SCHEDULE WITH FACILITIES STAFF.

FULLY SPRINKLERED
ISSUED FOR BID

Revisions	Date

CONSULTANTS:

MEP AND STRUCTURAL ENGINEER
H.F. LENZ COMPANY
1407 Scalp Avenue
Johnstown, PA 15904
Tel (814) 269-9300
www.hflenz.com

KEY PLAN:

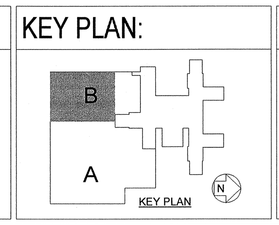

COMMONWEALTH OF PENNSYLVANIA
REGISTERED PROFESSIONAL
TIMOTHY M. EARHART
ENGINEER
No. PE-041207-E

ARCHITECT:

ARCHITECT
VDG
Vision Design Group
2200 Dunbarton Drive Suite F
Chesapeake, VA 23325
Tel (757) 477-8600

ENVIRONMENTAL CONSULTANT
Earth Smart Environmental Solutions, LLC
232 S. Dillard Street, Suite 230
Winter Garden, FL 34787-3516

Project Number	Scale
	As indicated

Drawing Title: PARTIAL FIFTH FLOOR PLAN UNIT "B" MECHANICAL NEW WORK

Approved: Project Director

Project Title: REPLACEMENT OF AC-27

Locat: 3900 WOODLAND AVENUE PHILADELPHIA, PA 19104

Date	Checked	Drawn
10/26/12	TME	RWB

VA Project Number: 642-11-160
Building Number: 2
Drawing Number: MH-AC27-201
Dwg. 8 of 24

Office of Facilities Management
Department of Veterans Affairs

VA FORM 08-6231, OCT 1978

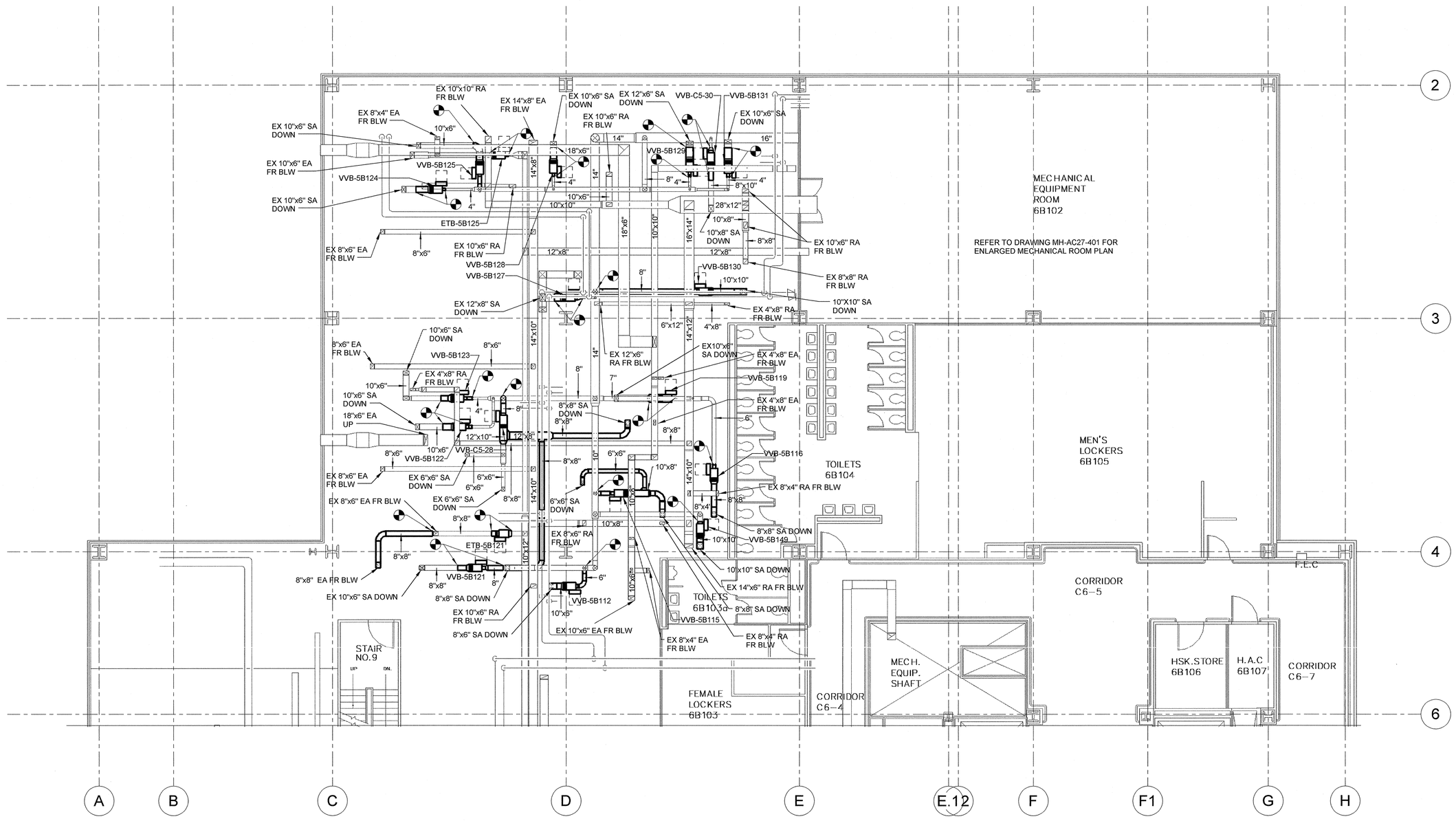

1 PARTIAL SIXTH FLOOR PLAN UNIT "B" MECHANICAL NEW WORK
SCALE: 1/8" = 1'-0"

GENERAL NOTES THIS DRAWING

1. ALL CRANE LIFTS ASSOCIATED WITH ALL PHASES OF WORK, INCLUDING BUT NOT LIMITED TO DELIVERY OF TEMPORARY UNITS, REMOVAL OF EXISTING UNITS, AND DELIVERY OF NEW UNITS SHALL BE PERFORMED ON WEEKENDS.
2. ANY UNIT SHUT-DOWNS REQUIRED SHALL BE SCHEDULED IN ADVANCE WITH FACILITIES ENGINEERING GROUP.
3. MEASURE AND RECORD AIRFLOWS OF UNITS PRIOR TO DEMOLITION.
4. CONTRACTOR SHALL VERIFY THAT NOT MORE THAN EXISTING AC AND RAF SYSTEMS ARE CONNECTED TO THE EXISTING ATC PANELS BEFORE DEMOLITION. PANEL SHALL REMAIN IN PLACE IF OTHER EQUIPMENT NOT DEMOLISHED UNDER THIS PROJECT IS SERVED FROM THIS PANEL.
5. SOME AREAS MAY REQUIRE TO BE OUT OF SERVICE FOR AN EXTENDED PERIOD OF TIME. THE GENERAL CONTRACTOR SHALL IDENTIFY THESE AREAS AND COORDINATE DOWNTIME WITH FACILITIES STAFF.
6. PRIOR TO START OF CONSTRUCTION, THE CONTRACTOR SHALL SUBMIT A SCHEDULE FOR THE ENTIRE PROJECT INDICATING TOTAL LENGTH OF TIME FOR THE PROJECT, ESTIMATED AREA SHUT DOWNS, AND PHASES OF WORK.

GENERAL NEW WORK NOTES THIS DRAWING

1. ALL DEMOLITION AND NEW WORK ASSOCIATED WITH THE PATIENT ROOMS SHALL BE PERFORMED ON A ROOM BY ROOM BASIS, SUCH THAT ONLY ONE IS OUT OF SERVICE AT A TIME UNLESS OTHERWISE DIRECTED BY THE VA PROJECT ENGINEER. ALL WORK, CLEANUP, AND SYSTEMS SHALL BE RETURNED TO FULL OPERATION BEFORE MOVING TO THE NEXT PATIENT ROOM. COORDINATE SCHEDULING OF ROOM SHUTDOWN WITH FACILITIES STAFF.
2. ALL WORK ASSOCIATED WITH THE PATIENT ROOMS AND PATIENT AREAS SHALL BE PERFORMED AS AFTER HOURS WORK. ALL OTHER WORK MAY BE PERFORMED DURING NORMAL BUSINESS HOURS UNLESS NOTED OTHERWISE.
3. THE MECHANICAL CONTRACTOR SHALL LOCALLY CLEAN THE AFFECTED AREAS OF ALL DUCT/PIPE DISTURBANCES.
4. FURNISH NEW TERMINAL AIR BOX AND SUPPLY/RETURN/EXHAUST AIR DUCTWORK BETWEEN THE POINTS OF NEW TO EXISTING CONNECTION SYMBOLS. FURNISH NEW HOT WATER HEATING SUPPLY AND RETURN PIPING INCLUDING NEW VALVES AND ACCESORIES AS SHOWN ON THE DETAIL AND CONNECT TO NEAREST MAIN.
5. PROVIDE NEW DIRECT DIGITAL CONTROL ADJUSTABLE TEMPERATURE SENSOR TO CONTROL ASSOCIATED VVB TERMINAL DEVICE.
6. REPLACE OR REPAIR ALL WORN/TORN INSULATION OF THE PIPING AND DUCTWORK ASSOCIATED WITH 1-AC-27 AND 1-RAF-27.

FULLY SPRINKLERED
ISSUED FOR BID

Revisions	Date

CONSULTANTS:

MEP AND STRUCTURAL ENGINEER
H.F. LENZ COMPANY
1407 Scalp Avenue
Johnstown, PA 15904
Tel (814) 269-9300
www.hflenz.com

KEY PLAN:

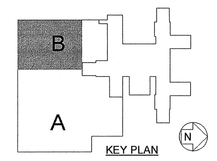

COMMONWEALTH OF PENNSYLVANIA
REGISTERED PROFESSIONAL
TIMOTHY M. EARHART
ENGINEER
No. PE 041235-E

ARCHITECT:

ARCHITECT
Vision Design Group
2200 Dunbarton Drive Suite F
Chesapeake, VA 23325
Tel (757) 477-8600

ENVIRONMENTAL CONSULTANT
Earth Smart Environmental Solutions, LLC
232 S. Dillard Street, Suite 230
Winter Garden, FL 34787-3516

Project Number	Scale
	As indicated

Drawing Title: PARTIAL SIXTH FLOOR PLAN UNIT "B" MECHANICAL NEW WORK

Approved: Project Director

Project Title: REPLACEMENT OF AC-27

Locat: 3900 WOODLAND AVENUE PHILADELPHIA, PA 19104

Date	Checked	Drawn
10/26/12	TME	RWB

VA Project Number: 642-11-160
Building Number: 2
Drawing Number: MH-AC27-202
Dwg. 9 of 24

Office of Facilities Management
Department of Veterans Affairs

VA FORM 08-6231, OCT 1978

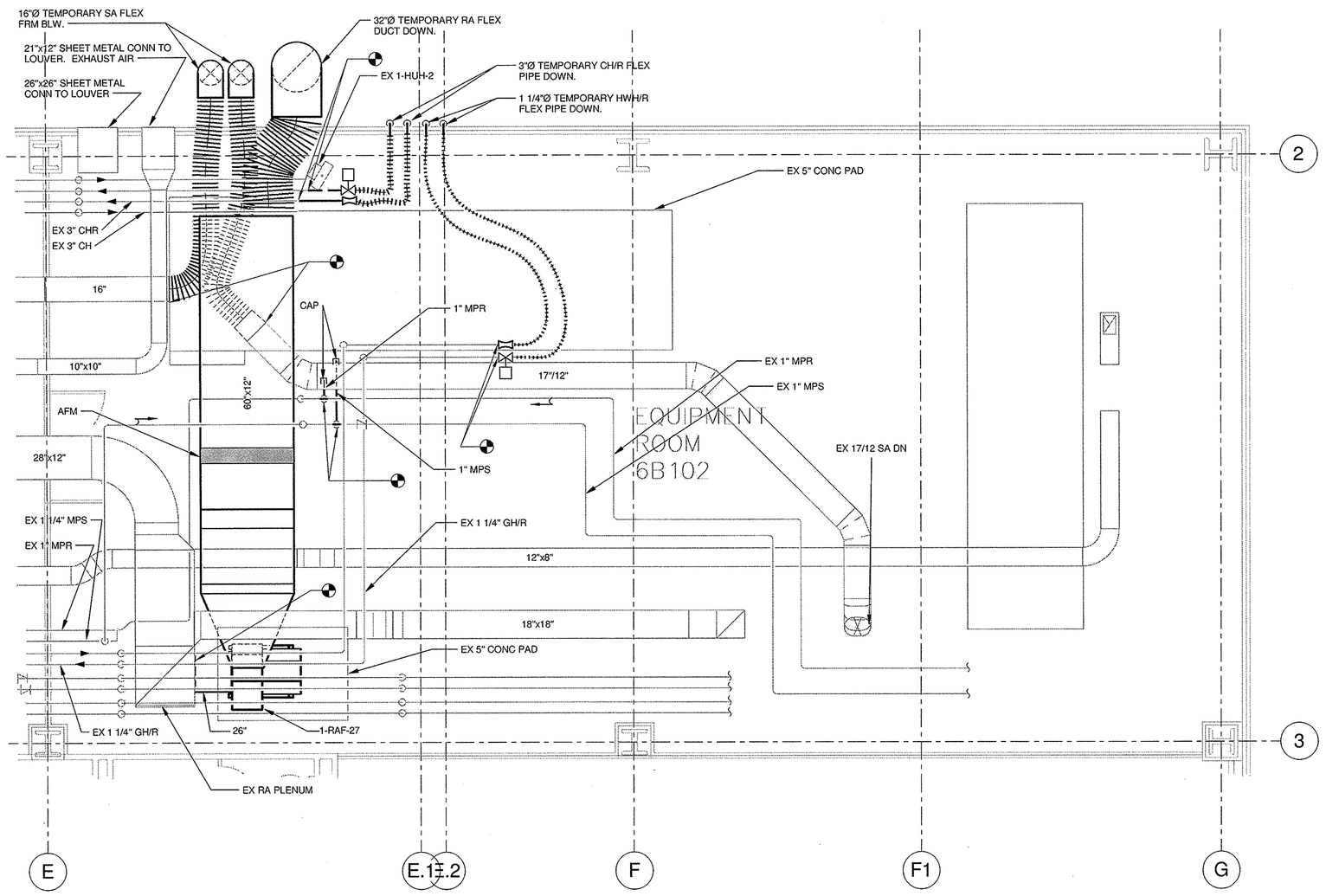

1 MECHANICAL EQUIPMENT ROOM 6B102 ENLARGED PLAN - TEMPORARY CONNECTIONS
SCALE: 1/4" = 1'-0"

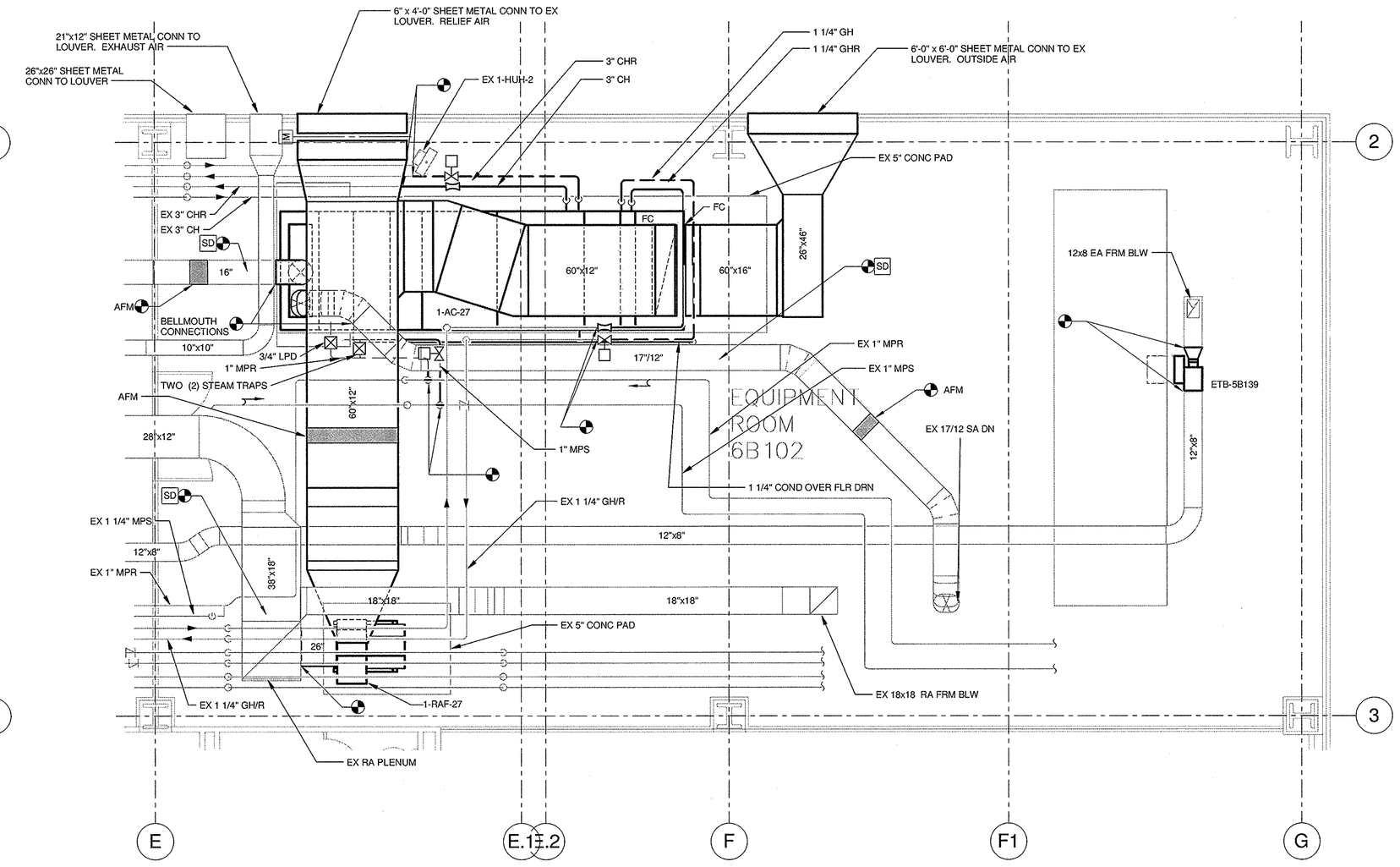

2 MECHANICAL EQUIPMENT ROOM 6B102 ENLARGED PLAN
SCALE: 1/4" = 1'-0"

GENERAL NOTES THIS DRAWING:

1. ALL CRANE LIFTS ASSOCIATED WITH ALL PHASES OF WORK, INCLUDING BUT NOT LIMITED TO DELIVERY OF TEMPORARY UNITS, REMOVAL OF EXISTING UNITS, AND DELIVERY OF NEW UNITS SHALL BE PERFORMED ON WEEKENDS.
2. ANY UNIT SHUT-DOWNS REQUIRED SHALL BE SCHEDULED IN ADVANCE WITH FACILITIES ENGINEERING GROUP.
3. MEASURE AND RECORD AIRFLOWS OF UNITS PRIOR TO DEMOLITION.
4. CONTRACTOR SHALL VERIFY THAT NOT MORE THAN EXISTING AC AND RAF SYSTEMS ARE CONNECTED TO THE EXISTING ATC PANELS BEFORE DEMOLITION. PANEL SHALL REMAIN IN PLACE IF OTHER EQUIPMENT NOT DEMOLISHED UNDER THIS PROJECT IS SERVED FROM THIS PANEL.
5. PRIOR TO START OF CONSTRUCTION, THE CONTRACTOR SHALL SUBMIT A SCHEDULE FOR THE ENTIRE PROJECT INDICATING TOTAL LENGTH OF TIME FOR THE PROJECT, ESTIMATED AREA SHUT DOWNS, AND PHASES OF WORK.

GENERAL NEW WORK NOTES THIS DRAWING:

1. ALL DEMOLITION AND NEW WORK ASSOCIATED WITH THE PATIENT ROOMS SHALL BE PERFORMED ON A ROOM BY ROOM BASIS, SUCH THAT ONLY ONE IS OUT OF SERVICE AT A TIME UNLESS OTHERWISE DIRECTED BY THE VA PROJECT ENGINEER. ALL WORK, CLEANUP, AND SYSTEMS SHALL BE RETURNED TO FULL OPERATION BEFORE MOVING TO THE NEXT PATIENT ROOM. COORDINATE SCHEDULING OF ROOM SHUTDOWN WITH FACILITIES STAFF.
2. ALL WORK ASSOCIATED WITH THE PATIENT ROOMS AND PATIENT AREAS SHALL BE PERFORMED AS AFTER HOURS WORK. ALL OTHER WORK MAY BE PERFORMED DURING NORMAL BUSINESS HOURS UNLESS NOTED OTHERWISE.
3. THE MECHANICAL CONTRACTOR SHALL LOCALLY CLEAN THE AFFECTED AREAS OF ALL DUCT/PIPE DISTURBANCES.
4. FURNISH NEW TERMINAL AIR BOX AND SUPPLY/RETURN/EXHAUST AIR DUCTWORK BETWEEN THE POINTS OF NEW TO EXISTING CONNECTION SYMBOLS. FURNISH NEW HOT WATER HEATING SUPPLY AND RETURN PIPING INCLUDING NEW VALVES AND ACCESORIES AS SHOWN ON THE DETAIL AND CONNECT TO NEAREST MAIN.
5. PROVIDE NEW DIRECT DIGITAL CONTROL ADJUSTABLE SENSOR TO CONTROL ASSOCIATED VVB TERMINAL DEVICE.
6. REPLACE OR REPAIR ALL WORN/TORN INSULATION OF THE PIPING AND DUCTWORK ASSOCIATED WITH 1-AC-27 AND 1-RAF-27.

GENERAL TEMPORARY UNIT NOTES THIS DRAWING:

1. EXISTING AIR HANDLING UNIT 1-AC-27 MUST REMAIN FULLY OPERATIONAL UNTIL THE TEMPORARY AIR HANDLING UNIT 1-TEMPAC-27 IS IN PLACE AND IS READY FOR THE SWITCH OVER FROM THE EXISTING UNIT TO THE TEMPORARY UNIT. THE SWITCH OVER WILL BE PERFORMED AS WEEKEND WORK, AND MUST BE COMPLETED BEFORE HOSPITAL OPERATING HOURS START ON MONDAY MORNING. SWITCH OVER TO BE COORDINATED WITH FACILITIES ENGINEERING GROUP.
2. THE 1 1/4" GLYCOL HEATING HOT WATER VALVES WILL REMAIN CLOSED DURING THE OPERATION AND USE OF 1-TEMPAC-27 UNLESS HEATING IS A PRIORITY. IN THAT CASE, THE TEMPORARY 1 1/4" GLYCOL WATER FLEX HOSES WILL BE CONNECTED TO THE 1 1/4" HWH&R PIPING AND VALVES SHALL BE OPENED. WHEN IN THE HEATING MODE, THE CONTRACTOR SHALL BE RESPONSIBLE FOR ALL FREEZE PROTECTION OF PIPING. THE CONTRACTOR SHALL FURNISH A HEAT EXCHANGER, PUMP, GLYCOL FILL AND ALL OTHER REQUIRED COMPONENTS. THE MECHANICAL CONTRACTOR SHALL ADJUST VALVING TO MAINTAIN A LEAVING AIR TEMPERATURE OF 55°F.
3. THE 3" CHILLED WATER VALVES WILL REMAIN OPEN DURING THE OPERATION AND USE OF 1-TEMPAC-27 UNLESS HEATING IS A PRIORITY. IN THAT CASE, THE VALVES WILL BE CLOSED. THE MECHANICAL CONTRACTOR SHALL ADJUST VALVING TO MAINTAIN A LEAVING AIR TEMPERATURE OF 55°F.
4. SUPPORT OF THE TEMPORARY UNIT SHALL NOT DAMAGE THE EXISTING ROOF. ANY DAMAGE TO THE EXISTING ROOF BY THE CONTRACTOR SHALL BE THE RESPONSIBILITY OF THE CONTRACTOR TO REPAIR AND TO MATCH EXISTING CONDITIONS APPROVED BY THE FACILITIES ENGINEERING GROUP.
5. DISCONNECT AND REMOVE EXISTING LOUVER AND SUPPORT MEMBERS TO FACILITATE REMOVAL OF EXISTING AIR HANDLING UNITS AND INSTALLATION OF NEW AIR HANDLING UNIT SECTIONS. REINSTALL AT COMPLETION OF WORK TO MATCH EXISTING.
6. TEMPORARY SUPPLY AND RETURN DUCTS AND FLEXIBLE WATER HOSES SHALL PENETRATE EXTERIOR WALL THRU EXISTING LOUVER SYSTEM. WHERE REQUIRED, THE EXISTING LOUVERED WALL SECTION, METAL PANELS AND INSULATION SHALL BE REMOVED AND STORED FOR FUTURE RE-INSTALLATION. WHERE DUCT OR HOSES PENETRATE EXTERIOR WALL, THESE PENETRATIONS SHALL BE SEALED AND INSULATED . AFTER TEMPORARY DUCTS AND HOSES ARE NO LONGER REQUIRED, THE PENETRATIONS SHALL BE CLOSED OFF, SEALED, AND INSULATED TO MATCH EXISTING CONDITIONS. EXISTING LOUVER SHALL BE RE-INSTALLED.
7. EXISTING SMOKE DETECTOR TO BE RELOCATED TO TEMPORARY DUCTING DURING PHASED CONSTRUCTION. UPON COMPLETION OF NEW DUCTWORK, NEW SMOKE DETECTOR TO BE PLACED IN NEW DUCTWORK. REFER TO NEW WORK PLAN FOR LOCATION.

FULLY SPRINKLERED
ISSUED FOR BID

Revisions	Date

CONSULTANTS:

MEP AND STRUCTURAL ENGINEER
H.F. LENZ COMPANY
1407 Scalp Avenue
Johnstown, PA 15904
Tel (814) 269-9300
www.hflenz.com

KEY PLAN:

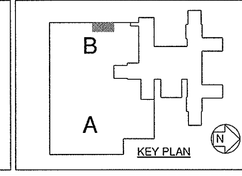

COMMONWEALTH OF PENNSYLVANIA
REGISTERED PROFESSIONAL ENGINEER
TIMOTHY M. EARHART
ENGINEER NO. PE-041237-E

ARCHITECT:

ARCHITECT
VDG
Vision Design Group
2200 Dunbarton Drive Suite F
Chesapeake, VA 23325
Tel (757) 477-8600

ENVIRONMENTAL CONSULTANT
Earth Smart Environmental Solutions, LLC
232 S. Dillard Street, Suite 230
Winter Garden, FL 34787-3516

Project Number	Scale
	As indicated

Drawing Title: MECHANICAL EQUIPMENT ROOM 6B102 ENLARGED PLAN

Approved: Project Director

Project Title: REPLACEMENT OF AC-27

Location: 3900 WOODLAND AVENUE PHILADELPHIA, PA 19104

Date	Checked	Drawn
10/26/12	TME	RWB

VA Project Number: 642-11-160
Building Number: 2
Drawing Number: MH-AC27-401
Dwg. 10 of 24

Office of Facilities Management
Department of Veterans Affairs

VA FORM 08-6231, OCT 1978

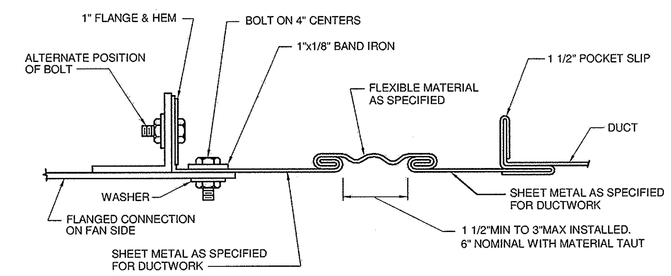

1 RECTANGULAR FLEXIBLE CONNECTION
NO SCALE

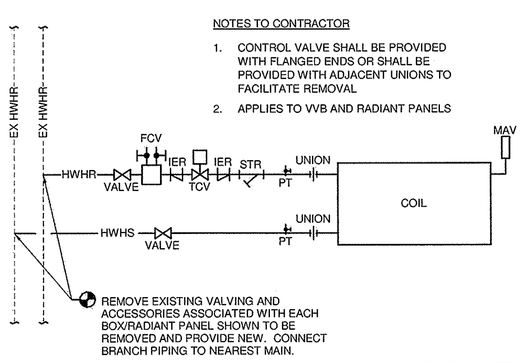

NOTES TO CONTRACTOR

1. CONTROL VALVE SHALL BE PROVIDED WITH FLANGED ENDS OR SHALL BE PROVIDED WITH ADJACENT UNIONS TO FACILITATE REMOVAL
2. APPLIES TO VVB AND RADIANT PANELS

2 AUX HEATING COIL PIPING DETAIL - HOT WATER
NO SCALE

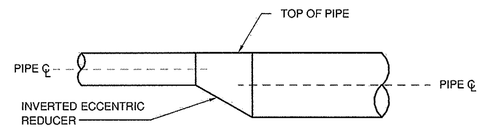

ELEVATION

3 TYPICAL PIPE SIZE CHANGE FOR WATER
NO SCALE

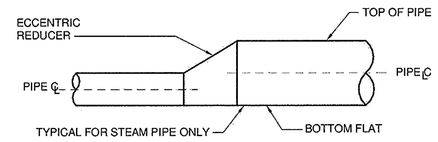

ELEVATION

4 TYPICAL PIPE SIZE CHANGE FOR STEAM
NO SCALE

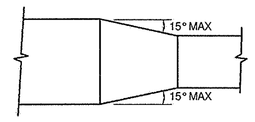

PLAN OR SIDE VIEW

5 DUCT TRANSITION
NO SCALE

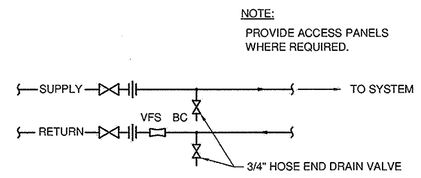

6 ISOLATION VALVE STATION DETAIL (IVS)
NO SCALE

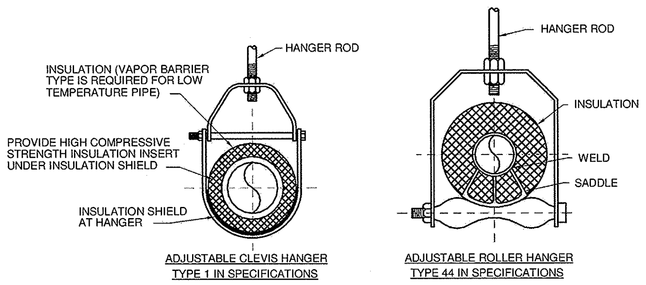

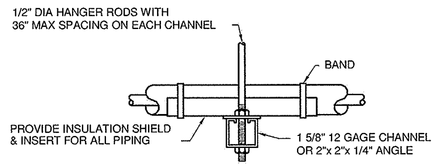

SIDE VIEW

TRAPEZE HANGER FOR UP TO 1000 LB. UNIFORM LOAD

MAXIMUM PIPE/TUBING SUPPORT SPACING, FEET												
NOM. SIZE	THRU 3/4"	1	1 1/4	1 1/2	2	2 1/2	3	4	5	6	8	10
PIPE	7 FT	7	7	9	10	11	12	14	16	17	19	22
TUBING	5 FT	6	7	8	8	9	10	12	13	14	16	–

NOTE:

FOR TRAPEZE HANGER TAKE SPACING OF SMALLEST SIZE ON TRAPEZE.

7 TYPICAL PIPE HANGERS
NO SCALE

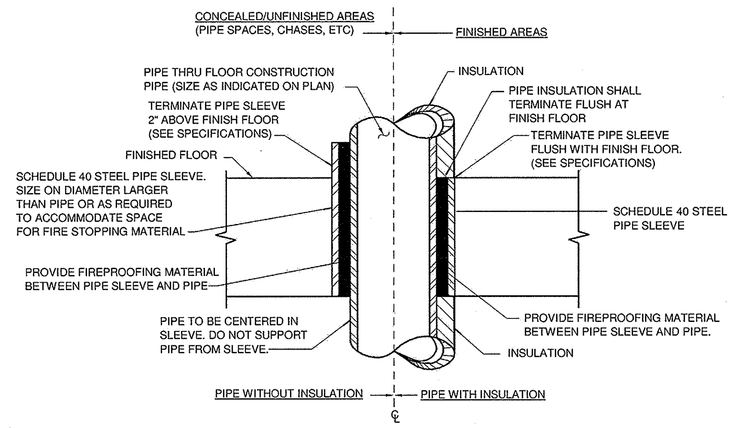

NOTES:

1. APPROVED FIRE STOPPING SHALL BE PROVIDED AND INSTALLED AT ALL EXISTING AND NEW FLOOR/CEILING PENETRATIONS TO MAINTAIN TIME RATED STRUCTURAL FLOOR/CEILING SLAB.
2. APPROVED SPLIT PIPE SLEEVE ASSEMBLY SHALL BE PROVIDED WHERE EXISTING FLOOR/CEILING SLAB PENETRATION OCCURS. (SEE SPECIFICATIONS)

8 PIPE SLEEVE THRU FLOOR/ CEILING DETAIL
NO SCALE

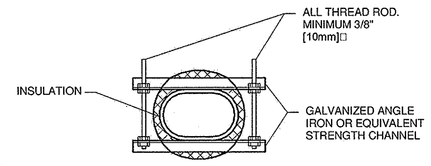

NOTE:

1. PROVIDE BRACING TO LIMIT THE AMPLITUDE OF WALL VIBRATION AND WALL DEFLECTION TO SPECIFIED MAXIMUMS.
2. MINIMUM BRACING REQUIREMENTS:

MAXIMUM DUCT WIDTH IN. [mm]	MAXIMUM SIZE ANGLE IN. [mm]	MAXIMUM SPACING IN. [mm]
UP TO 26 [650]	NONE	
27 [675] TO 40 [1000]	1-1/2x1-1/2x3/16 [40x40x7]	72 [1800]
41 [1000] TO 60 [1500]	2x2x3/16 [50x50x7]	48 [1200]
61 [1500] TO 72 [1800]	2x2x3/16 [50x50x7]	24 [600]

3. INSULATION: FOR COLD DUCTS INSULATE BRACES AND PROVIDE VAPOR BARRIER.

9 FLAT OVAL DUCT HANGERS/REINFORCEMENT
NO SCALE

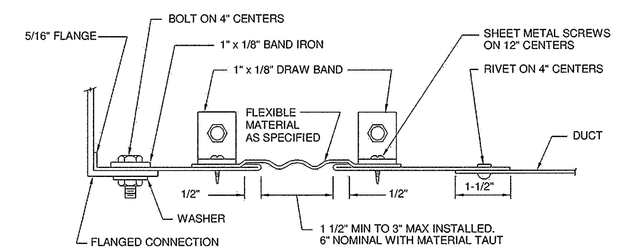

10 ROUND FLEXIBLE CONNECTION
NO SCALE

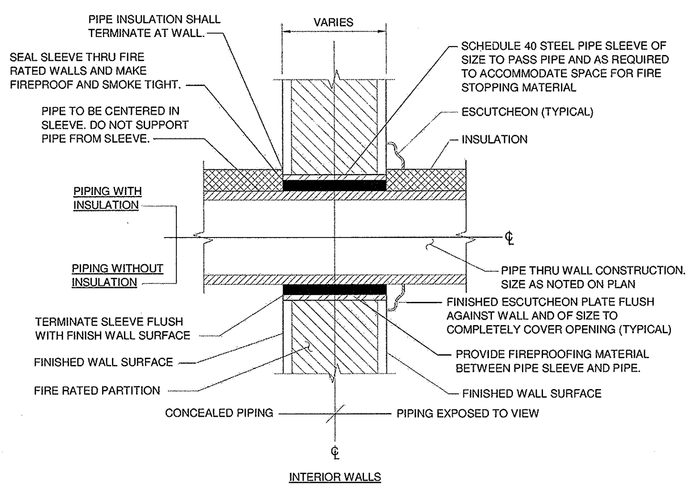

INTERIOR WALLS

NOTES:

1. APPROVED FIRE STOPPING SHALL BE PROVIDED AND INSTALLED AT ALL EXISTING AND NEW WALL PENETRATION THRU TIME RATED WALLS AND PARTITIONS.
2. APPROVED SPLIT PIPE SLEEVE ASSEMBLY SHALL BE PROVIDED WHERE EXISTING WALL PENETRATIONS OCCUR THRU EXISTING TIME RATED WALLS AND PARTITIONS. (SEE SPECIFICATIONS)

11 PIPE SLEEVE THRU WALL DETAIL
NO SCALE

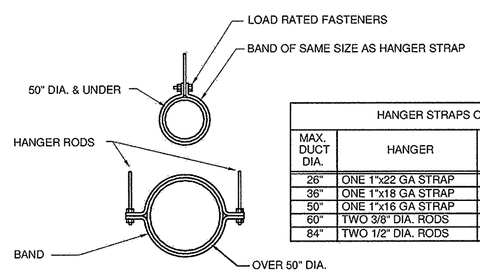

HANGER STRAPS OR RODS			
MAX. DUCT DIA.	HANGER	MAX. LOAD LBS.	MAX. SPACING FT.
26"	ONE 1"x22 GA STRAP	260	12
36"	ONE 1"x18 GA STRAP	420	12
50"	ONE 1"x16 GA STRAP	700	12
60"	TWO 3/8" DIA. RODS	1320	12
84"	TWO 1/2" DIA. RODS	2500	12

NOTE:

1. TABULATED DATA FROM SMACNA ALLOWS FOR DUCT REINFORCING AND INSULATION, BUT NO EXTERNAL LOAD.

12 ROUND DUCT HANGERS
NO SCALE

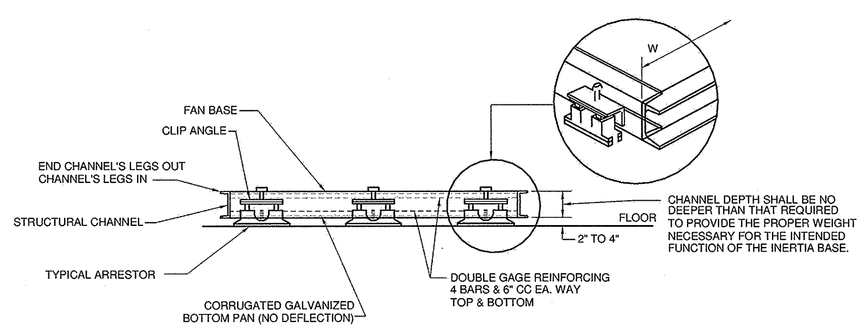

13 FLOOR MOUNTED FAN INERTIA BASE
NO SCALE

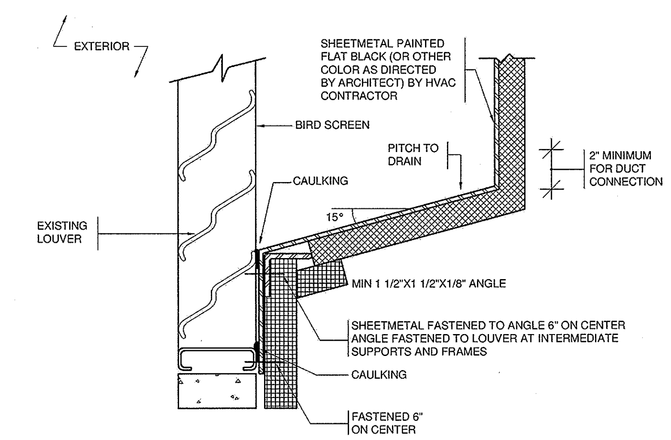

NOTES:

1. SUPPORT PLENUM FROM FLOOR OR STRUCTURE ABOVE W/GALVANIZED STEEL ANGLES AND CHANNELS.

14 PLENUM LOUVER CONNECTION
NO SCALE

FULLY SPRINKLERED
ISSUED FOR BID

Revisions	Date

CONSULTANTS:

MEP AND STRUCTURAL ENGINEER

H.F. LENZ COMPANY
1407 Scalp Avenue
Johnstown, PA 15904
Tel (814) 269-9300
www.hflenz.com

KEY PLAN:

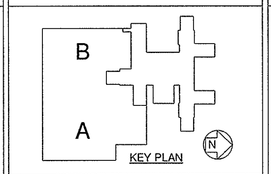

KEY PLAN

COMMONWEALTH OF PENNSYLVANIA
REGISTERED PROFESSIONAL
TIMOTHY M. EARHART
ENGINEER No. PE041237-E

ARCHITECT:

ARCHITECT
VDG
Vision Design Group
2200 Dunbarton Drive Suite F
Chesapeake, VA 23325
Tel (757) 477-9600

ENVIRONMENTAL CONSULTANT
Earth Smart Environmental Solutions, LLC
232 S. Dillard Street, Suite 230
Winter Garden, FL 34787-3516

Project Number	Scale
	As indicated

Drawing Title: MECHANICAL DETAILS

Approved: Project Director

Project Title: REPLACEMENT OF AC-27

Location: 3900 WOODLAND AVENUE PHILADELPHIA, PA 19104

Date	Checked	Drawn
10/26/12	TME	RWB

VA Project Number: 642-11-160

Building Number: 2

Drawing Number: MH-AC27-501

Dwg. 11 of 24

Office of Facilities Management

Department of Veterans Affairs

VA FORM 08-6231, OCT 1978

NOTES:

1. ALL SQUARE OR RECTANGULAR ELBOWS SHALL HAVE ONE OF THE TWO TYPES OF TURNING VANES SHOWN. SINGLE VANE ELBOWS WILL NOT BE PERMITTED.
2. VANES SHALL BE CONSTRUCTED, SUPPORTED AND FASTENED AS RECOMMENDED BY SMACNA.
3. ALL SQUARE OR RECTANGULAR ELBOWS SHOWN ON PLANS FOR EXHAUST OR RETURN DUCT MAY BE MADE RADIUS ELBOWS PROVIDED SPACE PERMITS RADIUS INSTALLATION.
4. ALL SQUARE OR RECTANGULAR ELBOWS SHOWN ON PLANS FOR SUPPLY DUCT MAY BE MADE RADIUS ELBOWS PROVIDED SPACE PERMITS RADIUS INSTALLATION AND/OR THERE ISNT AN OUTLET OR TAKE-OFF WITHING 5D ON THE DOWNSTREAM SIDE OF THE ELBOW.

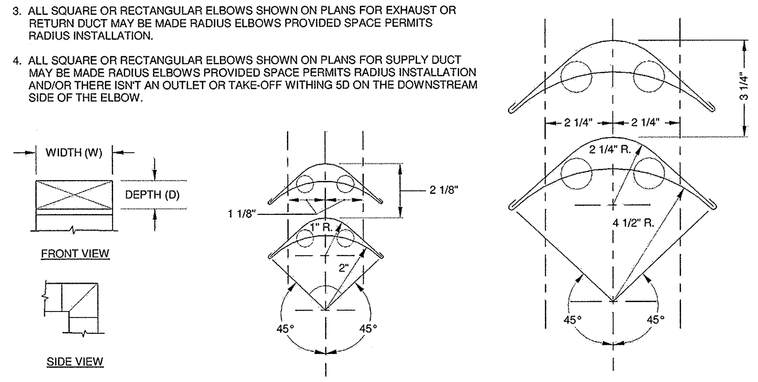

1 SQUARE OR RECTANGULAR ELBOWS
NO SCALE

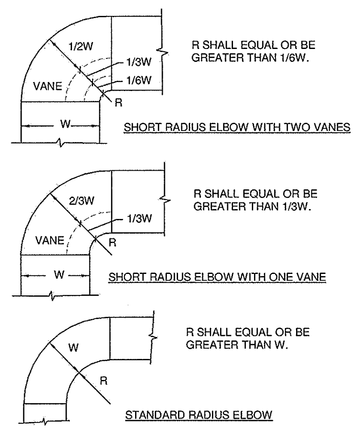

NOTES:

1. THE INTERIOR SURFACE OF ALL RADIUS ELBOWS SHALL BE MADE ROUND.
2. ALL STANDARD RADIUS ELBOWS SHOWN ON PLANS MAY BE MADE SHORT RADIUS ELBOWS. ALL SHORT RADIUS ELBOWS SHALL HAVE VANES. VANES SHALL BE CONSTRUCTED, SUPPORTED AND FASTENED AS RECOMMENDED BY SMACNA.

2 RADIUS ELBOWS
NO SCALE

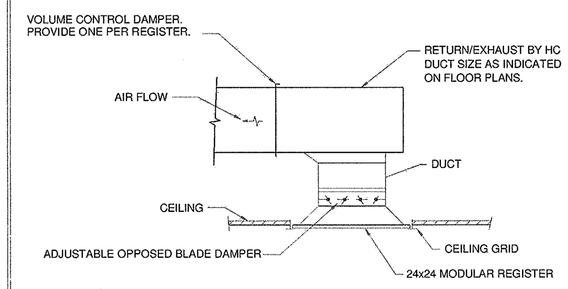

3 EXHAUST GRILLE TYPICAL CONNECTION
NO SCALE

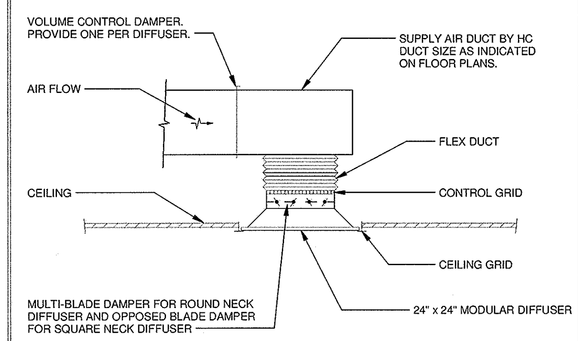

4 SUPPLY AIR DIFFUSER TYPICAL CONNECTION
NO SCALE

DIMENSION	DRAIN TRAP LOCATION FOR NEGATIVE PRESSURE	DRAIN TRAP LOCATION FOR POSITIVE PRESSURE
A.	4"	2"
B.	4"	TOTAL AHU SP ± 1 (4" MINIMUM)
C.	2" ABOVE SPLASH BLOCK OR 2" ABOVE FUNNEL DRAIN	2" ABOVE SPLASH BLOCK OR 2" ABOVE FUNNEL DRAIN

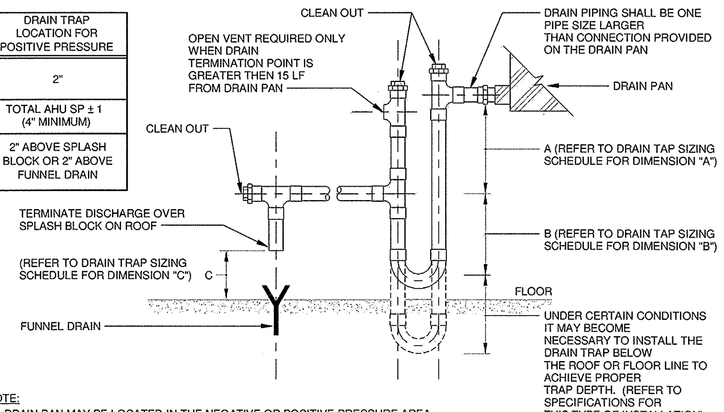

NOTE:
DRAIN PAN MAY BE LOCATED IN THE NEGATIVE OR POSITIVE PRESSURE AREA OF THE AIR STREAM. REFER TO DRAIN TRAP SIZING SCHEDULE FOR DIMENSIONAL DATA REQUIRED FOR SPECIFIC DRAIN LOCATION.

5 AIR HANDLING UNIT CONDENSATE DRAIN TRAP PIPING DETAIL
NO SCALE

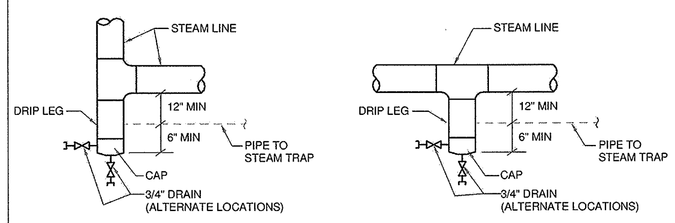

NOTES:

1. DRIP POCKET PIPE SIZE SAME AS STEAM MAIN UNLESS OTHERWISE NOTED.

6 STEAM LINE DRIP POCKET
NO SCALE

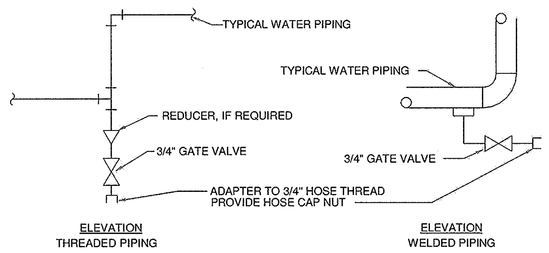

NOTES:

1. DRAIN ALL LOW POINTS AS INDICATED ABOVE.
2. WHERE SCALE POCKETS ARE SHOWN ON PIPE RISER DIAGRAMS AND/OR PLANS LOCATE DRAIN AT BOTTOM OF SCALE POCKET.

7 TYPICAL DRAIN VALVE CONNECTION
NO SCALE

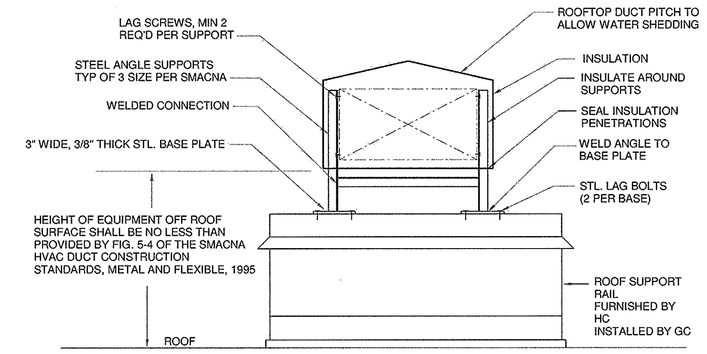

NOTE: HOT DIPPED GALVANIZED FASTENERS, STEEL SHAPES, AND SUPPORTS SHALL BE USED.

8 ROOFTOP DUCT/PIPE SUPPORT
NO SCALE

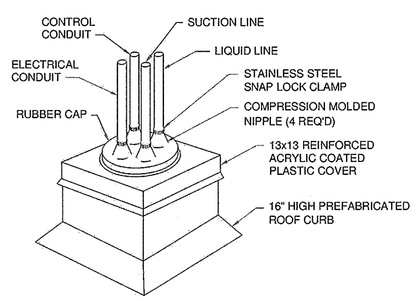

9 PIPE PORTAL DETAIL
NOT TO SCALE

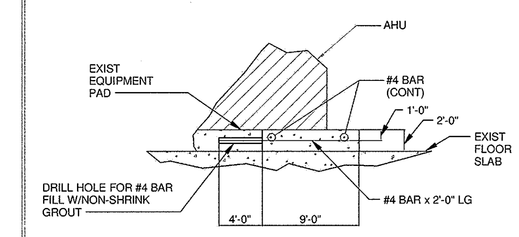

10 EQUIPMENT PAD EXTENSION DETAIL
NO SCALE

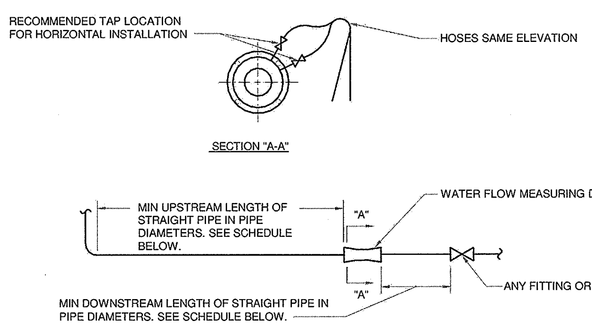

WATER FLOW MEASURING DEVICE INSTALLATION SCHEDULE			
TYPE	MIN UPSTREAM LENGTH OF STRAIGHT PIPE IN PIPE DIAMETERS		MIN DOWNSTREAM LENGTH OF STRAIGHT PIPE IN PIPE DIAMETERS
	FOR SIDE TEE	FOR VALVE OR OTHER FITTING	
VENTURI, AUTOMATIC BALANCING CONTROL VALVE, OR INSERTION VELOCITY AVERAGING AND MEASURING TUBE	10	5	2

NOTES:

1. DIMENSIONS SHOWN IN SCHEDULE ARE MINIMUM REQUIRED. IF MANUFACTURER OF FURNISHED WATER FLOW MEASURING DEVICE RECOMMENDS A GREATER DIMENSION, USE THEIR RECOMMENDATION.
2. INSTALL THE WATER FLOW MEASURING DEVICE SO THE FLOW ARROW IS IN THE SAME DIRECTION AS THE FLOW.
3. THE WATER FLOW MEASURING DEVICE MAY BE INSTALLED IN EITHER HORIZONTAL OR VERTICAL PIPE. UNITS REQUIRING REMOTE METERS SHALL HAVE THE METER CONNECTIONS LOCATED ON OR NEAR THE SIDE WHEN INSTALLED IN HORIZONTAL PIPE. SEE SECTION "A-A". THE METER CONNECTIONS CAN BE INSTALLED IN ANY POSITION WHEN INSTALLED IN VERTICAL PIPE.

11 WATER FLOW MEASURING DEVICE INSTALLATION DETAIL
NO SCALE

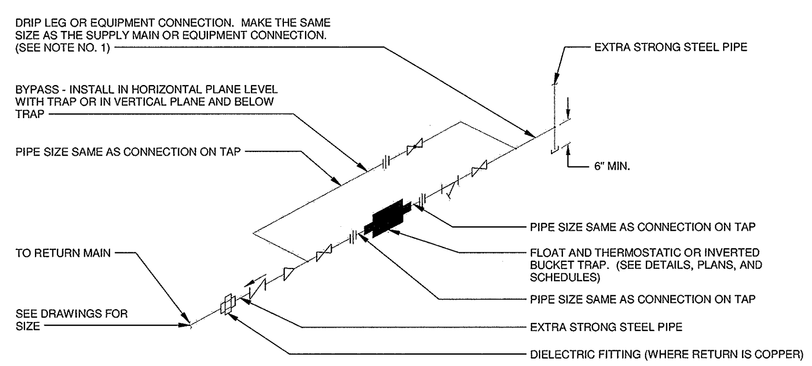

NOTES:

1. ALL DRIP POINTS ON STEAM MAINS SHALL BE PROVIDED WITH A 12" MINIMUM HIGH DRIP LEG FROM BOTTOM OF STEAM MAIN TO TRAP INLET. DRIP LEG SHALL HAVE 6" SCALE POCKET BELOW TRAP INLET.
2. NO BYPASS IS REQUIRED ON THE TRAP SET PROVIDED FOR THE DRIPPING OF LOW PRESSURE SUPPLY MAINS, (15 PSIG OR LESS.)
3. NO CHECK VALVE IS REQUIRED FOR LOW PREASSURE STEAM SYSTEM WITH GRAVITY RETURN.
4. NO BYPASS OR STRAINER IS REQUIRED ON TRAP SETS IN PARALLEL FOR PRE-HEAT COILS. ONLY ONE CHECK VALVE AND ONE DIELECTRIC FITTING IS REQUIRED.

12 FLOAT & THERMOSTATIC OR INVERTED TRAP SET CONNECTIONS
NO SCALE

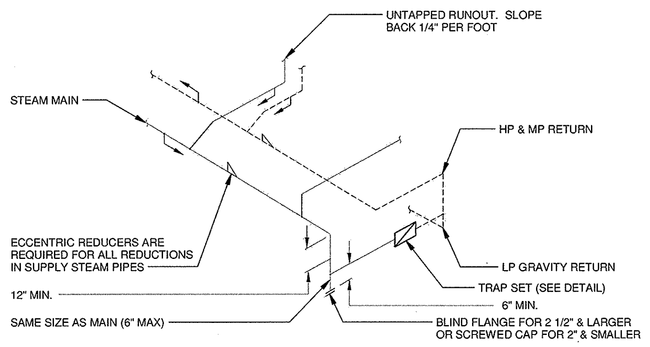

NOTES:

1. SLOPE MAINS AND BRANCHES DOWN 1" PER 40 FEET IN DIRECTION OF FLOW UNLESS SHOWN OTHERWISE
2. LIMIT UNTRAPPED, COUNTER FLOW, RUNOUTS TO 10 FEET MAXIMUM. COUNTER FLOW RUN OUTS SHALL BE OVERSIZED BY ONE PIPE SIZE.

13 TYPICAL STEAM LINE & DRIP PIPING
NO SCALE

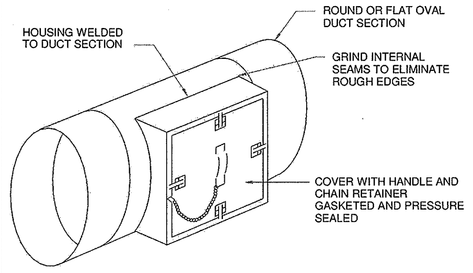

14 ACCESS DOOR FOR ROUND/OVAL DUCT
NO SCALE

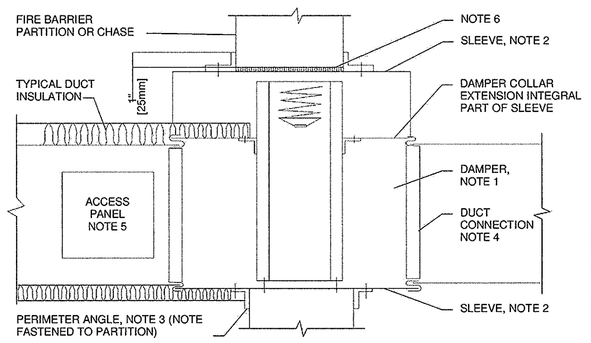

NOTE:

1. A VERTICAL DAMPER IS SHOWN. HORIZONTAL DAMPER INSTALLATION, 1S SIMILAR. FOLLOW DAMPER MANUFACTURER'S INSTRUCTIONS, INCLUDING FASTENER OPTIONS AND GAGES FOR SLEEVE AND PERIMETER ANGLES. FIRE DAMPERS MUST BE INSTALLED IN THE PARTITION OR FLOOR AND NOT OUTSIDE THE PENETRATION.
2. GALVANIZED SLEEVE: GAGE NOT LESS THAN CONNECTING DUCT. FASTEN SLEEVE TO DAMPER FRAME AND TO PERIMETER ANGLES.
3. PERIMETER ANGELS: GALVANIZED STEEL, NOT LESS THAN 1 1/2"x1 1/2" [40x40mm], 14 GAGE, TO PROVIDE 1" [25mm] MINIMUM OVERLAP OF OPENING ON ALL 4 SIDES.
4. BREAKAWAY DUCT CONNECTION: CONTRACTOR'S OPTION OF TYPES SHOWN IN SMACNA. ACCESS PANELS: SIZE AND LOCATION TO PERMIT SERVICING THE FUSIBLE LINK OR LINKS.
5. PROVIDE 1/4" TO 1/2" [6 TO 15mm] CLEARANCE ON HEIGHT AND WIDTH. FILL OPEN SPACE WITH ROCK WOOL FIRESTOP FIBER.
6. ALL DUCT WORK RISERS WHICH ARE RUN EXPOSED, SUCH AS THRU ATTIC FLOORS AND MECHANICAL ROOM FLOORS, SHALL BE PROVIDED WITH 3" [75mm] HIGH CONCRETE CURB AROUND OPENING FOR DUCT.

15 FIRE DAMPER INSTALLATION D
NO SCALE

FULLY SPRINKLERED
ISSUED FOR BID

Revisions | Date

CONSULTANTS:

MEP AND STRUCTURAL ENGINEER
H.F. LENZ COMPANY
1407 Scalp Avenue
Johnstown, PA 15904
Tel (814) 269-6300
www.hflenz.com

KEY PLAN:

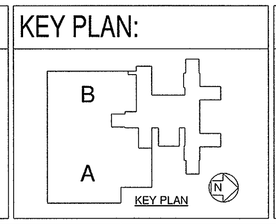

KEY PLAN

COMMONWEALTH OF PENNSYLVANIA
REGISTERED PROFESSIONAL
TIMOTHY M. EARHART
ENGINEER
No. PE 041237-E

ARCHITECT:

ARCHITECT
VDG
Vision Design Group
2300 Dunbarton Drive Suite F
Chesapeake, VA 23325
Tel (757) 477-8600

ENVIRONMENTAL CONSULTANT
Earth Smart Environmental Solutions, LLC
232 S. Dillard Street, Suite 230
Winter Garden, FL 34787-3516

Project Number	Scale
	As indicated

Drawing Title: MECHANICAL DETAILS

Approved: Project Director

Project Title: REPLACEMENT OF AC-27

Location: 3900 WOODLAND AVENUE PHILADELPHIA, PA 19104

Date	Checked	Drawn
10/26/12	TME	RWB

VA Project Number: 642-11-160

Building Number: 2

Drawing Number: MH-AC27-502

Dwg. 12 of 24

Office of Facilities Management

Department of Veterans Affairs

VA FORM 08-6231, OCT 1978

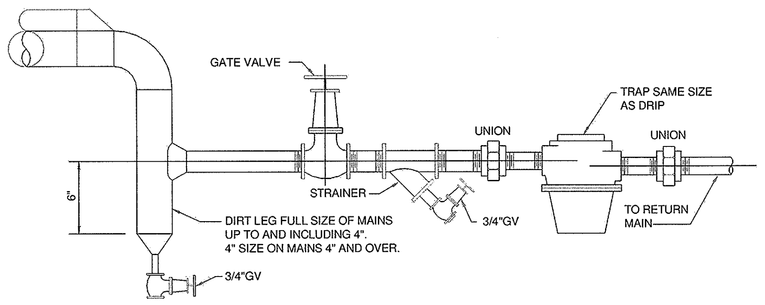

NOTE:

1. SIZE EACH STEAM TRAP AT (2) TWO TIMES THE COIL CAPACITY
2. STRAINER SHALL BE MOUNTED IN HORIZONTAL POSITION TO PREVENT COLLECTION OF CONDENSATE.

1 MEDIUM/LOW PRESSURE DRIP - STANDARD
NO SCALE

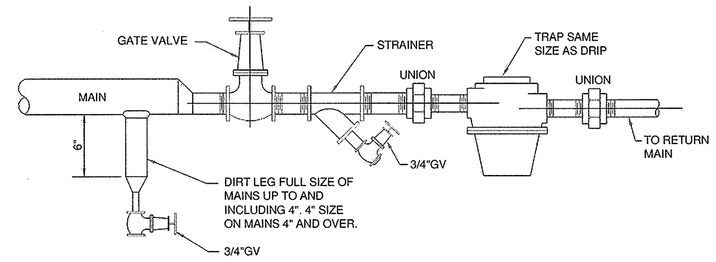

NOTE:

1. SIZE EACH STEAM TRAP AT (2) TWO TIMES THE COIL CAPACITY
2. STRAINER SHALL BE MOUNTED IN HORIZONTAL POSITION TO PREVENT COLLECTION OF CONDENSATE.

2 MEDIUM/LOW PRESSURE DRIP - SPECIAL
NO SCALE

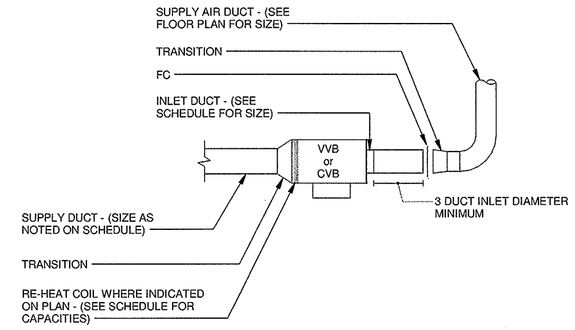

3 VARIABLE AND CONSTANT VOLUME BOX DETAIL
NOT TO SCALE

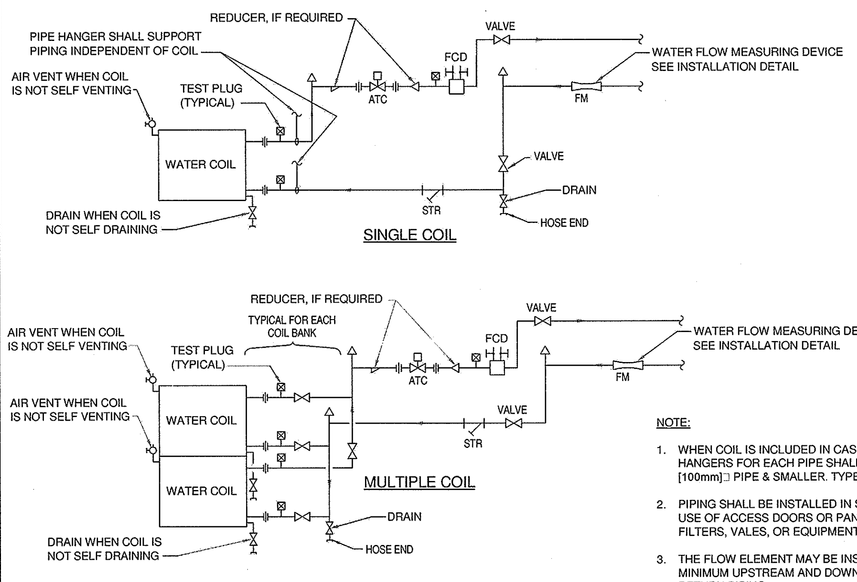

NOTE:

1. WHEN COIL IS INCLUDED IN CASING MOUNTED ON VIBRATION ISOLATORS THE FIRST 2 HANGERS FOR EACH PIPE SHALL BE SPRING & NEOPRENE TYPE. TYPE "H" FOR 4" [100mm]□ PIPE & SMALLER. TYPE "H-P" FOR 5" [125mm]□ PIPE & LARGER.
2. PIPING SHALL BE INSTALLED IN SUCH MANNER THAT IT WILL NOT BLOCK THE SWING OR USE OF ACCESS DOORS OR PANELS; NEITHER SHALL IT BLOCK THE SERVICING OF FILTERS, VALES, OR EQUIPMENT.
3. THE FLOW ELEMENT MAY BE INSTALLED IN THE SUPPLY PIPING IF THE REQUIRED MINIMUM UPSTREAM AND DOWNSTREAM DIMENSIONS CANNOT BE OBTAINED IN THE RETURN PIPING.
4. CONTROL VALVE SHALL BE PROVIDED WITH FLANGED ENDS OR SHALL BE PROVIDED WITH ADJACENT UNIONS TO FACILITATE REMOVAL

4 TYPICAL CONNECTIONS TO WATER COILS
NOT TO SCALE

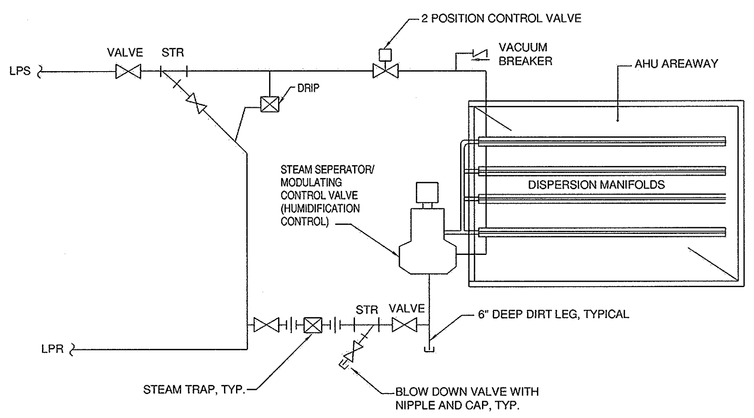

NOTE:

1. SIZE EACH STEAM TRAP AT (2) TWO TIMES THE COIL CAPACITY
2. STRAINER SHALL BE MOUNTED IN HORIZONTAL POSITION TO PREVENT COLLECTION OF CONDENSATE.

5 HUMIDIFIER DETAIL
NO SCALE

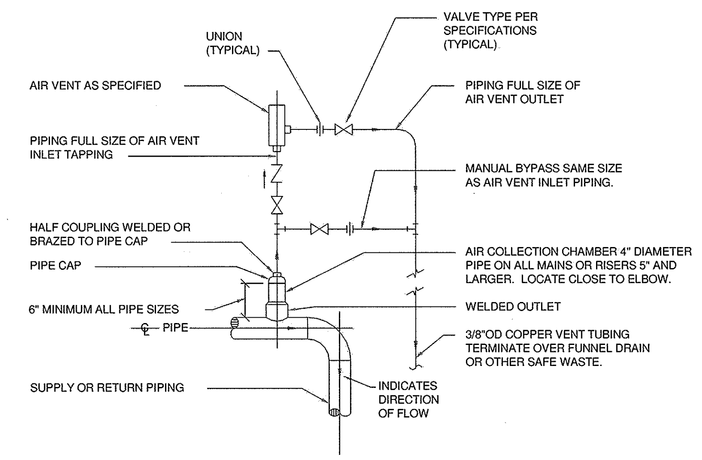

6 AUTOMATIC AIR VENT FOR MAINS 5" DIAMETER OR LARGER
NO SCALE

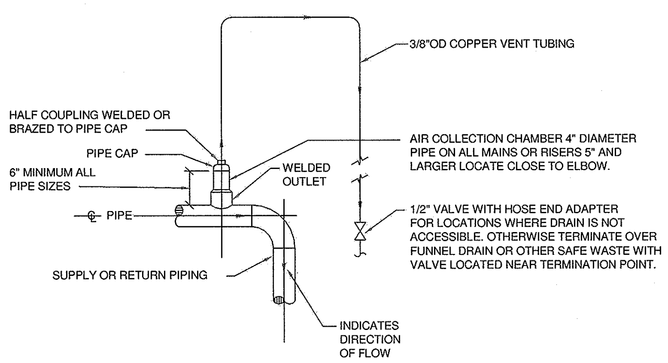

7 MANUAL AIR VENT DETAIL FOR MAIN 5" DIAMETER OR LARGER
NO SCALE

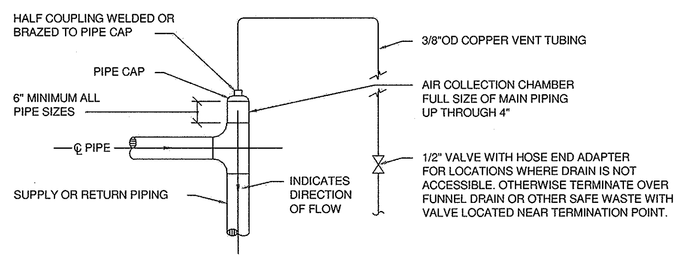

8 MANUAL AIR VENT FOR MAINS 4" DIAMETER OR SMALLER
NO SCALE

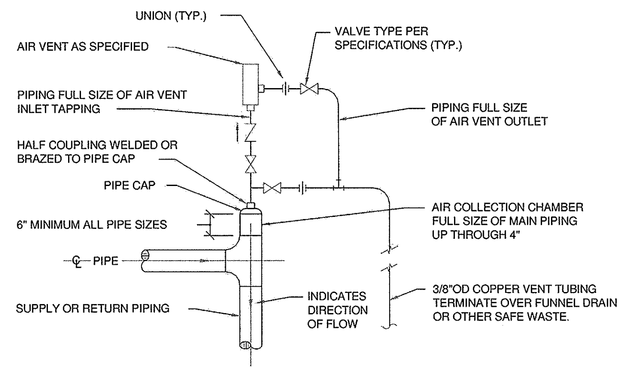

9 AUTOMATIC AIR VENT FOR MAINS 4" DIAMETER OR SMALLER
NO SCALE

FULLY SPRINKLERED
ISSUED FOR BID

Revisions	Date

CONSULTANTS:

MEP AND STRUCTURAL ENGINEER

H.F. LENZ COMPANY
1407 Scalp Avenue
Johnstown, PA 15904
Tel (814) 269-9300
www.hflenz.com

KEY PLAN:

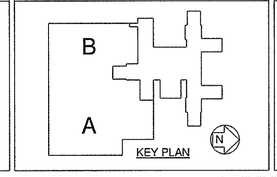

COMMONWEALTH OF PENNSYLVANIA REGISTERED PROFESSIONAL ENGINEER TIMOTHY M. EARHART No. PE-041227-E

ARCHITECT:

ARCHITECT
VDG
Vision Design Group
2200 Dunbarton Drive Suite F
Chesapeake, VA 23325
Tel (757) 477-8600

ENVIRONMENTAL CONSULTANT
Earth Smart Environmental Solutions, LLC
232 S. Dillard Street, Suite 230
Winter Garden, FL 34787-3516

Project Number	Scale
	As indicated

Drawing Title: MECHANICAL DETAILS

Approved: Project Director

Project Title: REPLACEMENT OF AC-27

Location: 3900 WOODLAND AVENUE PHILADELPHIA, PA 19104

Date: 10/26/12 | Checked: TME | Drawn: RWB

VA Project Number: 642-11-160

Building Number: 2

Drawing Number: MH-AC27-503

Dwg. 13 of 24

Office of Facilities Management

Department of Veterans Affairs

VA FORM 08-6231, OCT 1978

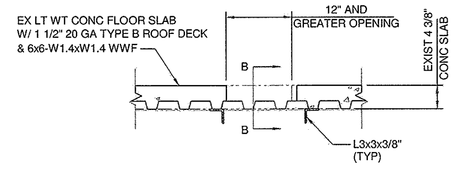

NOTE:
CONTRACTOR SHALL COORDINATE WITH THE MECHANICAL DRAWINGS FOR THE SIZE, QUANTITY AND LOCATION OF REQUIRED NEW OR MODIFIED EXISTING OPENINGS IN THE EXISTING UTILITY FLOOR DECK. ALL CUTTING OF EXISTING DECK TO BE POWER SAWED.

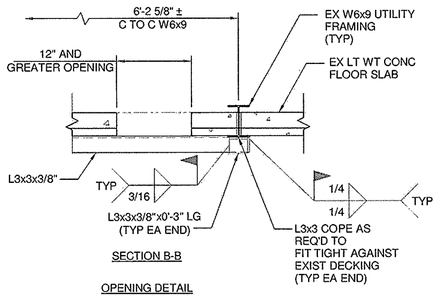

SECTION B-B

OPENING DETAIL

OPENING 12" OR GREATER

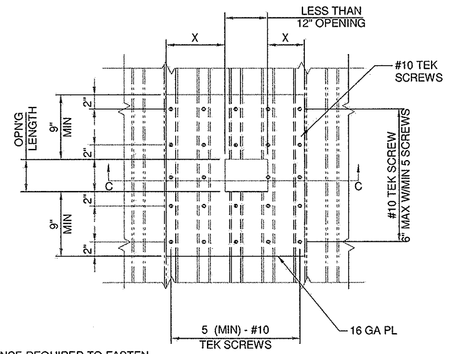

X = DISTANCE REQUIRED TO FASTEN TO 2 ADJACENT BOTTOM RIBS BESIDE OPENING (6" MIN)

OPENING PLAN

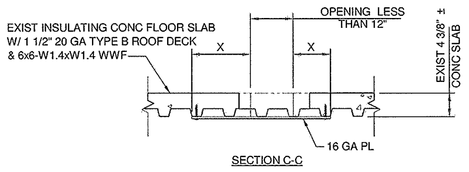

SECTION C-C

OPENING LESS THAN 12"

1 TYPICAL UTILITY FLOOR OPENING DETAIL

NO SCALE

NOTE:
THE CONCRETE INFILL SHALL BE LIGHT WEIGHT INSULATING CONCRETE HAVING A DENSITY OF 30 PCF.

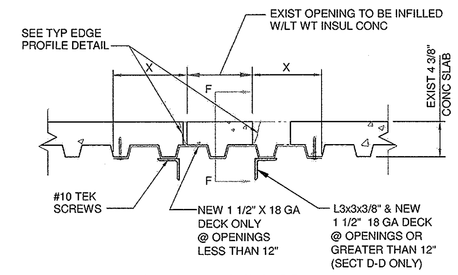

SECTION D-D & SECTION E-E

X = BEYOND ADJACENT UNCUT RIB OR MIN 6"

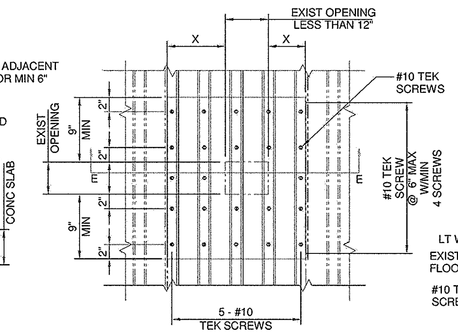

INFILL PLAN @ EXISTING OPENING 12" OR LESS

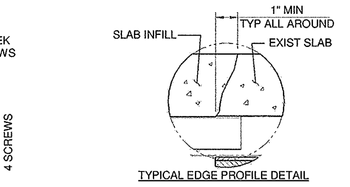

TYPICAL EDGE PROFILE DETAIL

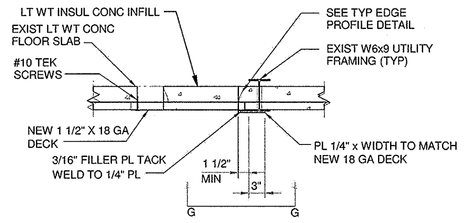

INFILL PLAN @ EX OPENING ADJACENT TO EXIST W6x9

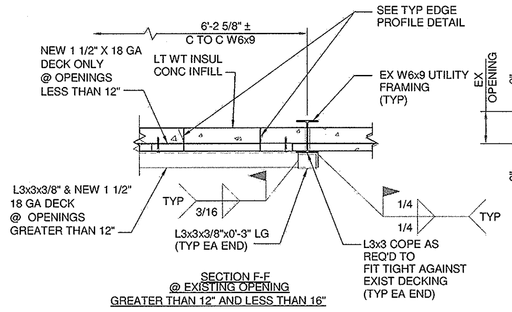

SECTION F-F
@ EXISTING OPENING
GREATER THAN 12" AND LESS THAN 16"

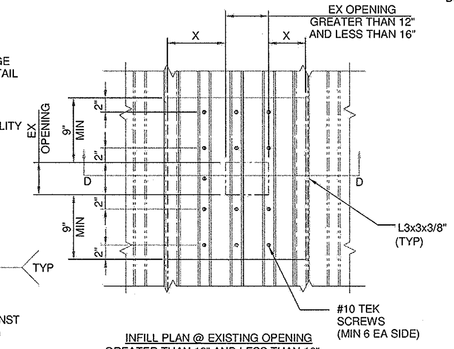

INFILL PLAN @ EXISTING OPENING
GREATER THAN 12" AND LESS THAN 16"

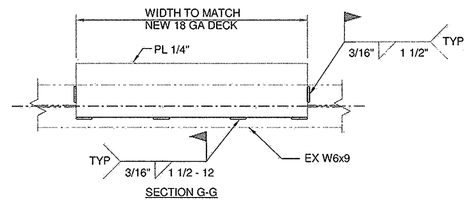

SECTION G-G

NOTE:
NEW 18 GA DECK TO MATCH THE PROFILE OF THE EXIST DECK.

2 TYPICAL UTILITY FLOOR INFILL DETAIL

NO SCALE

FULLY SPRINKLERED
ISSUED FOR BID

Revisions	Date

CONSULTANTS:

MEP AND STRUCTURAL ENGINEER

H.F. LENZ COMPANY
1407 Scalp Avenue
Johnstown, PA 15904
Tel (814) 269-9300
www.hflenz.com

KEY PLAN:

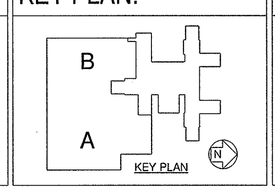

KEY PLAN

COMMONWEALTH OF PENNSYLVANIA
REGISTERED PROFESSIONAL
TIMOTHY M. EARHART
ENGINEER
No. PE 041227-E

ARCHITECT:

ARCHITECT
Vision Design Group
2200 Dunbarton Drive Suite F
Chesapeake, VA 23325
Tel (757) 477-8600

ENVIRONMENTAL CONSULTANT
Earth Smart Environmental Solutions, LLC
232 S. Dillard Street, Suite 230
Winter Garden, FL 34787-3516

Project Number	Scale
	As indicated

Drawing Title: MECHANICAL DETAILS

Approved: Project Director

Project Title: REPLACEMENT OF AC-27

Location: 3900 WOODLAND AVENUE PHILADELPHIA, PA 19104

Date	Checked	Drawn
10/26/12	TME	RWB

VA Project Number: 642-11-160

Building Number: 2

Drawing Number: MH-AC27-504

Dwg. 14 of 24

Office of Facilities Management

Department of Veterans Affairs

VA FORM 08-6231, OCT 1978

AIR HANDLING UNIT SCHEDULE

UNIT No	LOCATION / WEIGHT	AREA SERVED	SUPPLY FAN DATA: CFM SUPPLY	CFM OA	ESP	TSP	FAN TYPE	ARRANGEMENT, INLET ROTATION & DISCHARGE	WHEEL TYPE	WHEEL MIN DIA	MAX RPM	DRIVE	MOTOR NOM HP	MOTOR ELEC	VFD
1-AC-27	EQUIP ROOM 6B102 4800LBS	5TH FLR B	8600 (7180)	2580 (2225)	3.25	6.67	PL	-	AF	22"	2172	DD	15	3/60/460V	YES

UNIT No	WATER COILS (COOLING): MAX FACE VEL (FPM)	MAX SP LOSS	ENT AIR °F DB	ENT AIR °F WB	LVG AIR °F DB	LVG AIR °F WB	CIRCULATING FLUID: FLUID	GPM	TEMP IN	TEMP OUT	MAX PD FT	TOT MBH	SENS MBH
1-AC-27	500	0.71	80	67	50.1	49.8	CW	82.7	45	55	11.9	419.1	265.9

UNIT No	WATER COILS (HEATING): MAX FACE VEL (FPM)	MAX SP LOSS	TEMP AIR °F ENT	TEMP AIR °F LVG	CIRCULATING FLUID: FLUID	GPM	TEMP IN	TEMP OUT	MAX PD FT	TOT MBH
1-AC-27	500	0.06	49	72.3	40% GH	14.7	180	150	4.4	212.8

UNIT No	ULTRA VIOLET LIGHT IRRADIATOR SYSTEM: LOCATION	MAX AV (FPM)	SURFACE REFLECTIVITY	IRRADIATE AIRBORNE PATHOGENS	IRRADIATE SURFACE PATHOGENS	TARGET MICROBES	MIN UVC DOSE* (µW/CM^2)	ELECTRICAL REQUIREMENTS: V/Ι/Hz	TOTAL WATTS	AMPS
1-AC-27	COOLING COIL	500	57%	NO	YES	MOLD GROWTH CONTROL	136	120/1/60	180	1.5

NOTE:

1. THE CONTRACTOR SHALL TAKE PRE-DEMOLITION AIR FLOW READINGS FOR EACH OF THE AIR SYSTEMS MAIN BRANCH DUCTS SERVING THE AREAS IN EACH PHASE OF CONSTRUCTION, AND RECORD FOR FUTURE REFERENCE. AT THE COMPLETION OF THE WORK IN EACH PHASE, THE CONTRACTOR SHALL PERFORM AIR BALANCING TO PROVIDE THE REQUIRED AIR FLOW TO THE NEW CONSTRUCTION AREA AND MAINTAIN THE PRE-DEMOLITION AIR FLOW TO THE SPACES TO BE RENOVATED IN FUTURE PHASES OF CONSTRUCTION, AS WELL AS PHASES COMPLETED EARLIER. THIS PHASED BALANCING SHALL INCLUDE ALL AIR SYSTEM UNITS SERVING THE AREA OF CONSTRUCTION.
2. THE OUTSIDE AIR CFM IS THE MINIMUM AMOUNT OF AIR TO BE PROVIDED.
3. UNIT SHALL NOT EXCEED 51" IN HEIGHT. USEABLE LOUVER BAND OPENING IS APPROXIMATELY 68" TALL. LOUVER STANDS 21.5" AFF.
4. EACH ACCESS DOOR SHALL HAVE A CONTACTOR TO SWITCH OFF THE UV LIGHTS WHEN DOOR IS OPENED.
5. MANUFACTURER SHALL VERIFY UV INTENSITIES LISTED ON THIS SCHEDULE AS APPLICABLE TO THEIR PRODUCT. HIGHER INTENSITIES, ADDITIONAL LAMPS, ETC MAY BE REQUIRED TO SATISFY THE PERFORMANCE REQUIREMENTS LISTED ON THIS SCHEDULE AND IN THE SPECIFICATION. THE MANUFACTURER SHALL PROVIDE DOCUMENTATION THAT THEIR SYSTEM COMPLIES WITH THE PERFORMANCE REQUIREMENTS.

AIR HANDLING UNIT SCHEDULE CONTINUED

UNIT No	AIR FILTERS: RATED EFF %	MERV	MAX SP DROP INITIAL	MAX SP DROP FINAL	HOUSING TYPE	FILTERS No	FILTERS SIZE	STEAM HUMIDIFIER: NUMBER OF MANIFOLDS	VAPOR TRAIL IN	EAT DB	EAT RH	LAT DB	LAT RH	STEAM PSIG ENT ON/OFF VALVE	ENT CTRL VALVE	CONTROL VALVE LBS/HR	TRAP LBS/HR CAPACITY
1-AC-27	30	7	0.16	0.43	SIDE	4 2	24x24 20x24	1	15	52	35	52	70	30	30	113 (103)	500
	90-95	14	0.71	0.96	12" RIGID SIDE	3 3	20x16 20x20										

RETURN AIR FAN SCHEDULE

FAN NO.	LOCATION	FAN CFM SYSTEM CFM	S. P.	FAN TYPE	ARRANGEMENT & DISCHARGE	WHEEL TYPE	OUTLET VELOCITY	FAN RPM	DRIVE	MOTOR NOM. HP	MOTOR PHASE VOLTAGE	VFD	REMARKS
1-RAF-27	EQUIPMENT ROOM 6B102	5900 4955	1.0"	CF	CW-TH	AF	1141	616	BELT	1.5	3-460	YES	-

NOTE:

1. FANS SHALL BE SUPPLIED WITH THE FOLLOWING OPTIONS - FLANGED OUTLET, BELT GUARD, AND EXTENDED LUBE LINES.
2. FANS SHALL BE SUPPORTED WITH AN INERTIA BASE.

AIR FLOW MEASURING DEVICE

1-AC-27

SYMBOL	LOCATION	DUCT	DUCT SIZE	DUCT TYPE	CFM MIN	CFM MAX	MAX SP LOSS MIN	FAN SYSTEM
1-AFM-AC27-SA1	6B102	SA	16"ω	HV	-	4900	0.15	1-AC-27
1-AFM-AC27-SA2	6B102	SA	17/12 OVAL	HV	-	3700	0.15	1-AC-27
1-AFM-AC27-RA	6B102	RA	60x12	LV	-	5900	0.15	1-AC-27

WATER FLOW MEASURING DEVICE

1-AC-27

SYMBOL	LOCATION	SYSTEM	TYPE	CAPACITY GPM	SIZE	REMARKS
1-FM-27-HW	6B102	HOT WATER	VENTURI	14.7	1 1/4"	-
1-FM-27-CW	6B102	CHILLED WATER	VENTURI	82.7	3"	-

EXISTING HOT WATER RADIANT PANEL SCHEDULE

SYMBOL	TOT BTUH	TOT GPM	MWT	WTD	REMARKS
EX SHP-5	2660	.28	170	20	-
EX SHP-6	2660	.28	170	20	-
EX SHP-7	-	-	-	-	-
EX SHP-9	3800	.40	170	20	-
EX SHP-11	-	-	-	-	-
EX SHP-12	-	-	-	-	-

EXHAUST TRACKING BOX SCHEDULE

1-AC-27

SYMBOL	SERVES	CFM MIN	CFM MAX	L (IN)	W (IN)	H (IN)	INLET DUCT INCHES DIA	DISCH DUCT W x H (IN)	MAX SP LOSS MIN	REMARKS
ETB-5B121	5B120, 5B121	130	425	18	12	10	8	12x10	0.1	-
ETB-5B125	5B125, 5B126	130	425	18	12	10	8	12x10	0.1	-
ETB-5B139	5B138, 5B139	130	425	18	12	10	8	12x10	0.1	-

CONSTANT/VARIABLE VOLUME BOX SCHEDULE

1-AC-27

SYMBOL	LOCATION	SERVES	CFM MIN	CFM MAX	BOX DIMENSIONS W (IN)	H (IN)	L (IN)	INLET DUCT (IN)	NOM COIL SIZE OR DISCH DUCT W x H (IN)	AUXILIARY HEATING COIL: COIL CFM	EAT °F	LAT °F	EWT °F	LWT °F	APD IN	WPD FT	GPM	TOTAL MBH	BRANCH PIPING
VVB-5B121	6B101	5B121	140	140	12	8	29	5	12x8	140	55	93	180	150	0.02	0.1	0.5	5.7	3/4"
VVB-5B122	6B101	5B122	140	140	12	8	29	5	12x8	140	55	93	180	150	0.02	0.1	0.5	5.7	3/4"
VVB-5B123	6B101	5B123	140	140	12	8	29	5	12x8	140	55	93	180	150	0.02	0.1	0.5	5.7	3/4"
VVB-5B124	6B101	5B124	160	160	12	8	29	5	12x8	160	55	95	180	162.7	0.02	0.4	0.8	6.9	3/4"
VVB-5B125	6B101	5B125	150	150	12	8	29	5	12x8	150	55	93	180	155	0.02	0.2	0.5	6.2	3/4"
VVB-5B128	6B101	5B128	180	180	12	8	29	5	12x8	180	55	92	180	161.8	0.03	0.4	0.8	7.2	3/4"
VVB-5B129	6B101	5B129	210	210	12	8	29	5	12x8	210	55	107	180	145	0.07	0.1	0.7	11.9	3/4"
VVB-5B131	6B101	5B131	210	210	12	8	29	5	12x8	210	55	107	180	145	0.07	0.1	0.7	11.9	3/4"
VVB-5B132	5B132	5B132	210	210	12	8	29	5	12x8	210	55	107	180	145	0.07	0.1	0.7	11.9	3/4"
VVB-5B135	5B135	5B135	210	210	12	8	29	5	12x8	210	55	107	180	145	0.07	0.1	0.7	11.9	3/4"
VVB-5B136	5B136	5B136	210	210	12	8	29	5	12x8	210	55	107	180	145	0.07	0.1	0.7	11.9	3/4"
VVB-5B139	5B139	5B139	130	130	12	8	29	5	12x8	130	55	96	180	155	0.02	0.1	0.5	5.8	3/4"
VVB-5B140	5B140	5B140	130	130	12	8	29	5	12x8	130	55	96	180	155	0.02	0.1	0.5	5.8	3/4"
VVB-5B141	5B141	5B141	130	130	12	8	29	5	12x8	130	55	96	180	155	0.02	0.1	0.5	5.8	3/4"
VVB-5B142	5B142	5B142	130	130	12	8	29	5	12x8	130	55	96	180	155	0.02	0.1	0.5	5.8	3/4"
VVB-5B143	5B143	5B143	130	130	12	8	29	5	12x8	130	55	96	180	155	0.02	0.1	0.5	5.8	3/4"
VVB-5B145	5B145	5B144, 5B145	160	160	12	8	29	5	12x8	160	55	95	180	162.7	0.02	0.4	0.8	6.9	3/4"
VVB-5B148	5B148	5B148	250	250	12	8	29	6	12x8	250	55	107	180	150	0.1	0.2	0.9	14.0	3/4"
VVB-5B149	6B101	5B149	400	400	12	10	29	8	12x10	400	55	106	180	150	0.13	0.7	1.5	22.0	3/4"
VVB-5B112	6B101	5B112	240	240	12	8	29	6	12x8	240	55	108	180	150	0.09	0.2	0.9	13.7	3/4"
VVB-5B115	6B101	5B113, 5B115	160	160	12	8	29	5	12x8	160	55	95	180	162.7	0.02	0.4	0.8	6.9	3/4"
VVB-5B116	6B101	5B116	130	130	12	8	29	5	12x8	130	55	96	180	155	0.02	0.1	0.5	5.8	3/4"
VVB-5B119	6B101	5B119	120	120	12	8	29	5	12x8	120	55	96	180	150	0.01	0.1	0.5	5.3	3/4"
VVB-5B130	6B101	5B117, 5B130, 5B133, 5B134	370	370	12	10	29	8	12x10	370	55	106	180	147	0.12	0.5	1.2	20.3	3/4"
VVB-5B147	5B147	5B147	120	120	12	8	29	5	12x8	120	55	96	180	150	0.01	0.1	0.5	5.3	3/4"
VVB-5B146	5B146	5B146	120	120	12	8	29	5	12x8	120	55	96	180	150	0.01	0.1	0.5	5.3	3/4"
VVB-C5-30	6B101	C5-30	400	400	12	10	29	8	12x10	400	55	106	180	150	0.13	0.7	1.5	22.0	3/4"
VVB-5B127	6B101	5B127	430	430	12	10	29	8	12x10	430	55	104	180	150	0.15	0.7	1.5	23.0	3/4"
VVB-C5-28	6B101	C5-28	550	550	12	10	29	8	12x10	550	55	100	180	150	0.24	1.0	1.8	26.5	3/4"
VVB-C5-32-1	C5-32	C5-32	190	190	12	8	29	5	12x8	190	55	92	180	165	0.03	0.5	1.0	7.6	3/4"
VVB-C5-32-2	C5-32	C5-32	310	310	12	8	29	6	12x8	310	55	100	180	145	0.14	0.2	0.9	15.1	3/4"
VVB-5B137	5B137	5B137	430	430	12	10	29	8	12x10	430	55	104	180	150	0.15	0.7	1.5	23.0	3/4"

NOTE:

1. BOXES SERVING EXTERIOR SPACES SHALL BE MINIMUM TWO ROW COIL.

DUCT CONSTRUCTION SCHEDULE

SYSTEM	USE	EXTENT OF DUCTWORK	SMACNA CLASS PRESS.	SMACNA CLASS SEAL	NOTE
1-AC-27	SA	FROM AHU TO TERMINAL BOX	+8"	A	-
	SA	FROM TERMINAL BOX TO DIFFUSER	+3"	B	-
	OA	ALL	-3"	B	-
	EA	FROM GRILLES TO 1-AC-27	-3"	B	-
	EA	FROM 1-AC-27 TO DISCHARGE OUTLET	+3"	B	-
ISOLATION EF	EA	FROM ETB TO EF	-4"	A	-
	EA	FROM GRILLES TO ETB	-2"	A	-
EF	EA	FROM GRILLES TO EF	-2"	C	-

EQUIPMENT SOUND POWER LEVEL SCHEDULE

UNIT	COMPONENT	SOUND POWER LEVEL BY OCTAVE BAND 62.5	125	250	500	1000	2000	4000	8000
1-AC-27	DISCHARGE Lw	91	90	96	93	89	83	79	73
	RA TOP Lw	88	85	92	87	81	77	70	62
1-RAF-27	DISCHARGE Lw	92	85	76	70	68	60	57	52

TEMPORARY PACKAGED AIR HANDLING UNIT SCHEDULE

UNIT No	LOCATION	AREA SERVED	CFM SUPPLY	CFM OA	EXT SP	MOTOR NOM HP	MOTOR PHASE VLTGE	MCA	WATER COILS (HEATING): ENT AIR °F DB	ENT AIR °F WB	LVG AIR °F DB	LVG AIR °F WB	CIRCULATING FLUID: FLUID	GPM	TEMP IN	TEMP OUT	MAX LOSS FT FLUID	MIN MBH	AIR FILTERS: MERV	RATED EFF %	MAX SP DROP INITIAL	MAX SP DROP FINAL	HOUSING TYPE	FILTERS No	FILTERS SIZE
1-TEMPAC-27	5TH FLR ROOF 6081 LBS	5TH FLOOR	7180	2225	3.25	30	3-460	55 A	50	-	80	-	HWH	15	180	150	4.3	215	7	30	0.12	0.7	SIDE SERVICE	4 4	20x20x4 14x20x4

NOTE:

1. CONTRACTOR SHALL BE RESPONSIBLE FOR INSTALLATION AND REMOVAL OF TEMPORARY AIR HANDLER INCLUDING CRANING.
2. TEMPORARY UNIT SHALL HAVE UNIT CONTROLS CAPABLE OF MAINTAINING A CONSTANT SUPPLY AIR TEMPERATURE OF 55 F BY MODULATING A TEMPORARY TWO WAY CONTROL VALVE FOR THE WATER COIL. DURING THE COOLING SEASON CONNECT THE TEMPORARY WATER PIPING TO THE 4" CHILLED WATER PIPING CONNECTIONS. DURING THE HEATING SEASON CONNECT TEMPORARY WATER PIPING TO THE 4" HEATING HOT WATER PIPING CONNECTIONS. IN THE HEATING SEASON CONFIGURATION THE CONTRACTOR IS RESPONSIBLE FOR COIL AND WATER PIPING FREEZE PROTECTION AND WILL PROVIDE A TEMPORARY HEAT EXCHANGER, PUMP, GLYCOL MIXTURE AND ALL OTHER ITEMS NECESSARY.
3. TEMPORARY PIPING MUST NOT BE CROSS CONNECTED BETWEEN HEATING AND CHILLED WATER SYSTEMS, WHEN CHANGING FROM HEATING TO COOLING ALL GLYCOL MUST BE FLUSHED OUT OF THE COIL AND FLEX HOSE BEFORE CONNECTING TO THE CHILLED WATER PIPING SYSTEM.
4. THE TEMPORARY UNIT WILL BE LOCATED ON THE ROOF ABOVE THE EQUIPMENT. SUPPORTING OF UNIT SHALL NOT DAMAGE THE EXISTING ROOF. ANY SITE CONDITIONS DAMAGED BY THE CONTRACTOR SHALL BE THE RESPONSIBILITY OF THE CONTRACTOR TO REPAIR TO MATCH EXISTING CONDITIONS AND THE APPROVAL OF THE FACILITIES ENGINEERING GROUP.
5. THE TEMPORARY UNIT SUPPLY FAN SHALL BE CONTROLLED BY A VARIABLE FREQUENCY DRIVE, PROVIDED BY UNIT MANUFACTURER.
6. PROVIDE FLEXIBLE DUCT MATERIAL FOR CONNECTING THE TEMPORARY HVAC UNITS TO THE AIR DISTRIBUTION SYSTEMS. PROVIDE A MOLECULARLY BONDED, HEAT SEALED, SPRING STEEL WIRE REINFORCED FLEXIBLE HOSE MATERIAL DESIGNED TO PERFORM IN A TEMPERATURE RANGE OF -20 TO 200 DEG. F. MATERIAL FABRIC SHALL BE 10 OZ./SQ. YD. (+/- 10 PERCENT) WITH A 9 BY 9 COUNT SCRIM AND A PVC FILE LAMINATED TO BOTH SIDES. FLEXIBLE DUCTS SHALL BE CONNECTED AND INSTALLED IN ACCORDANCE WITH MANUFACTURER'S RECOMMENDATIONS.
7. PROVIDE FLEXIBLE WATER HOSES FOR CONNECTING THE TEMPORARY HVAC UNITS TO THE HYDRONIC DISTRIBUTION SYSTEMS. PROVIDE A FLEXIBLE HOSE MATERIAL CONSTRUCTED OF OZONE-RESISTANT EPDM RUBBER WITH HIGH TENSILE TEXTILE REINFORCING CORDS DESIGNED TO PERFORM IN A TEMPERATURE RANGE OF -30 TO 185 DEG. F AND A MAXIMUM PRESSURE RATING OF 150 PSI. PROVIDE MANUFACTURER'S STANDARD COUPLINGS FOR CONNECTING TO THE HYDRONIC DISTRIBUTION SYSTEMS. FLEXIBLE HOSES SHALL BE INSTALLED IN ACCORDANCE WITH MANUFACTURER'S RECOMMENDATIONS.
8. THE TEMPORARY UNIT SHALL BE EQUIPPED WITH A FACTORY MOUNTED DISCONNECT SWITCH.

TEMPORARY COOLING COIL SCHEDULE (WATER)

SYMBOL	LOCATION	SERVES	CFM	NOMINAL SIZE LXH	FACE VELOCITY	CHILLED WATER COOLING COIL: EAT °F DB	EAT °F WB	LAT °F DB	LAT °F WB	SP IN	SENS MBH	FLUID	GPM	EWT °F	LWT °F	WPD	ROWS	TOTAL MBH	REMARKS
TEMPCC-27	5TH FLR ROOF	5TH FLOOR	7180	48x48	448	80	67	51	50	0.68	200	CW	59	45	55	8.35	5	289	-

FULLY SPRINKLERED
ISSUED FOR BID

Revisions	Date

CONSULTANTS:

MEP AND STRUCTURAL ENGINEER

H.F. LENZ COMPANY
1407 Scalp Avenue
Johnstown, PA 15904
Tel (814) 269-9300
www.hflenz.com

KEY PLAN:

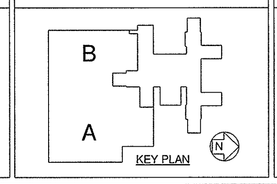

KEY PLAN

COMMONWEALTH OF PENNSYLVANIA
REGISTERED PROFESSIONAL
TIMOTHY M. EARHART
ENGINEER No. PE041237-E

ARCHITECT:

ARCHITECT
Vision Design Group
2300 Dunbarton Drive Suite F
Chesapeake, VA 23325
Tel (757) 477-8600

ENVIRONMENTAL CONSULTANT
Earth Smart Environmental Solutions, LLC
232 S. Dillard Street, Suite 230
Winter Garden, FL 34787-3516

Project Number	Scale
	As indicated

Drawing Title: MECHANICAL SCHEDULES

Approved: Project Director

Project Title: REPLACEMENT OF AC-27

Location: 3900 WOODLAND AVENUE PHILADELPHIA, PA 19104

Date: 10/26/12 | Checked: TME | Drawn: RWB

VA Project Number: 642-11-160

Building Number: 2

Drawing Number: MH-AC27-601

Dwg. 15 of 24

Office of Facilities Management

Department of Veterans Affairs

VA FORM 08-6231, OCT 1978

CONTROL DIAGRAMS, SEQUENCES AND POINT LISTS

GENERAL REQUIREMENTS

OCCUPIED/UNOCCUPIED CHANGEOVER
THE DDC SYSTEM SHALL PROVIDE OCCUPIED/UNOCCUPIED FOR THE ZONES INDICATED BELOW. ZONE TEMPERATURE SENSORS SHALL FUNCTION TO PROVIDE REPRESENTATIVE SPACE TEMPERATURE INFORMATION FOR EACH ZONE TO THE DDC SYSTEM. THE DDC SYSTEM SHALL OPTIMIZE ZONE TEMPERATURE. EACH ZONE SHALL BE PROVIDED WITH ITS OWN DISCRETE OPTIMIZATION PROGRAM.
THE DDC SYSTEM SHALL INCLUDE PROVISIONS, ON A PER ZONE BASIS, FOR THE USER TO ENTER AN OVERRIDE TIME INTERVAL WHICH WILL CAUSE THE ZONE TO OPERATE IN THE OCCUPIED MODE WHEN IT WAS OTHERWISE SCHEDULED TO BE IN THE UNOCCUPIED MODE. THE DDC SYSTEM SHALL ALSO INCLUDE PROVISIONS, ON A PER ZONE BASIS, FOR THE USER TO DESIGNATE A ZONE FOR CONTINUOUS OPERATION. ZONING SCHEME SHALL BE APPROVED BY THE OWNER PRIOR TO IMPLEMENTATION OF ANY APPLICATION PROGRAMMING BY THE ATC CONTRACTOR.
THE DDC SYSTEM SHALL INCLUDE SEPARATE HOLIDAY SCHEDULE PROVISIONS FOR ZONES AS DETERMINED BY THE OWNER. THIS SHALL ALLOW THE SELECTED ZONES TO FOLLOW THEIR OWN OCCUPIED/UNOCCUPIED SCHEDULES WHILE THE REST OF THE BUILDING REMAINS IN AN EXTENDED UNOCCUPIED MODE. HOLIDAY SCHEDULE SCHEME SHALL BE APPROVED BY THE OWNER PRIOR TO IMPLEMENTATION OF ANY APPLICATION PROGRAMMING BY THE ATC CONTRACTOR.

OPTIMUM START/STOP
OPTIMUM START - HEATING MODE
a. WHEN THE OUTSIDE AIR TEMPERATURE IS LESS THAN THE HEATING CHANGEOVER TEMPERATURE AND THE SPACE TEMPERATURE IS BELOW THE OCCUPIED HEATING SETPOINT, THE OSS PROGRAM SHALL CONTROL IN THE HEATING MODE.
b. BEGINNING AT THE MAXIMUM START TIME, OSS SHALL CALCULATE THE TIME REQUIRED TO BRING THE CONTROLLED SPACE UP TO THE OCCUPIED HEATING SETPOINT.
c. AT THE CALCULATED START TIME, THE DDC SYSTEM SHALL SWITCH THE APPROPRIATE ZONE TO THE OCCUPIED MODE.
OPTIMUM STOP - HEATING MODE
a. AT THE SCHEDULED VACANCY TIME LESS THE MAXIMUM PROGRAMMED STOP TIME LIMIT, THE OSS PROGRAM SHALL CALCULATE THE HEATING STOP TIME.
b. AT THE CALCULATED HEATING STOP TIME, THE DDC SYSTEM SHALL SWITCH THE APPROPRIATE ZONE TO THE UNOCCUPIED MODE.
OPTIMUM START - COOLING MODE
a. WHEN THE OUTSIDE AIR TEMPERATURE IS GREATER THAN THE COOLING CHANGEOVER TEMPERATURE AND THE SPACE TEMPERATURE IS ABOVE THE OCCUPIED COOLING SETPOINT, THE OSS PROGRAM SHALL CONTROL IN THE COOLING MODE.
b. BEGINNING AT THE MAXIMUM START TIME, OSS SHALL CALCULATE THE TIME REQUIRED TO BRING THE CONTROLLED SPACE DOWN TO THE OCCUPIED COOLING SETPOINT.
c. AT THE CALCULATED START TIME, THE DDC SYSTEM SHALL SWITCH THE APPROPRIATE ZONE TO THE OCCUPIED MODE.
OPTIMUM STOP - COOLING MODE
a. AT THE SCHEDULED VACANCY TIME LESS THE MAXIMUM PROGRAMMED STOP TIME LIMIT, THE OSS PROGRAM SHALL CALCULATE THE COOLING STOP TIME.
b. AT THE CALCULATED COOLING STOP TIME, THE DDC SYSTEM SHALL SWITCH THE APPROPRIATE ZONE TO THE UNOCCUPIED MODE.
OSS ADAPTIVE OPERATION
a. THE OSS PROGRAM SHALL MONITOR ITS HEATING AND COOLING PERFORMANCE FOR EACH CYCLE OF OPERATION.
b. USING DATA OBTAINED DURING START UP, THE OSS ADAPTATION PROGRAM SHALL MODIFY THE OSS OPERATING TABLES TO CORRECT FOR ANY ERRORS THAT MAY OCCUR, AND ADAPT THE BUILDING'S OSS PROGRAM TO THE BUILDING'S MASS AND THERMAL CHARACTERISTICS.
c. SEPARATE CALCULATIONS AND TABLES SHALL BE MAINTAINED FOR OPTIMUM START HEAT, OPTIMUM START COOL, OPTIMUM STOP HEAT AND OPTIMUM STOP COOL.

ALARM REQUIREMENTS
THE FOLLOWING ALARM CONDITIONS SHALL BE DETECTED AND AN APPROPRIATE ALARM GENERATED. THE ATC CONTRACTOR, WORKING IN CONJUNCTION WITH OWNER, SHALL IMPLEMENT AUTOMATIC EMAIL OF SELECTED ALARMS TO THE DESIGNATED OWNER PERSONNEL. ADDITIONAL METHOD OF ALARM ANNUNCIATION SHALL BE COORDINATED WITH THE OWNER.
- ☐ DEVICE FAILED TO START/STOP
- ☐ HIGH/LOW SUPPLY AIR TEMPERATURE
- ☐ HIGH/LOW SPACE TEMPERATURE

TREND REQUIREMENTS
THE FOLLOWING TRENDS SHALL BE IMPLEMENTED (AND AUTOMATICALLY ARCHIVED TO THE SERVER WHERE PROVIDED) AS PART OF THIS PROJECT TO AID IN OPERATING THE BUILDING. POINT SELECTION SHALL BE CONSISTENT WITH AVAILABLE MEMORY AND COORDINATED WITH THE OWNER PRIOR TO IMPLEMENTATION.
- ☐ SELECTED SPACE TEMPERATURES/SETPOINTS

SPECIAL SEQUENCE REQUIREMENTS
ALL SETPOINTS, PARAMETERS, ETC. DESIGNATED AS MANUALLY ADJUSTABLE (I.E. ADJ.) IN THE PRECEDING PARAGRAPHS SHALL BE DIRECTLY ADJUSTABLE FROM THE COLORGRAPHICS. THE ASSOCIATED COLORGRAPHIC SCREEN OR A SEPARATE SETPOINT SCREEN, THE LATTER BEING DIRECTLY ACCESSIBLE VIA A TRANSFER POINT ON THE ORIGINAL COLORGRAPHIC SCREEN OR FROM A TREE STRUCTURE, SHALL PROVIDE FOR THE ADJUSTMENT FUNCTION. IT SHALL NOT BE NECESSARY TO LEAVE THE COLORGRAPHIC SCREEN PACKAGE IN ORDER TO MAKE THE ADJUSTMENTS. NO EXCEPTIONS

DUCT SMOKE DETECTORS
EXISTING SMOKE CONTROL PANEL WILL CLOSE SMOKE/COMBINATION SMOKE DAMPER.

STAND ALONE RADIANT CEILING PANELS

1. A WALL MOUNTED SINGLE THERMOSTAT SHALL CONTROL THE MODULATING VALVE TO MAINTAIN SETPOINT. ON A FALL IN SPACE TEMPERATURE BELOW THE HEATING SETPOINT, THE MODULATING VALVE SHALL OPEN TO MAINTAIN SPACE TEMPERATURE. THE REVERSE SEQUENCE SHALL OCCUR ON A RISE IN SPACE TEMPERATURE.

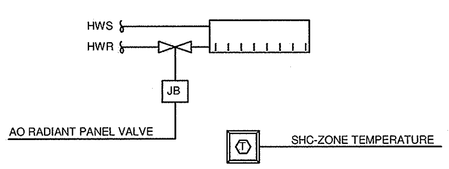

VARIABLE AIR VOLUME BOX

GENERAL:
120 VAC POWER SHALL BE SUPPLIED TO A JUNCTION BOX BY THE PROJECT ELECTRICAL CONTRACTOR. IT WILL BE THIS CONTRACTOR'S RESPONSIBILITY TO PROVIDE ANY AND ALL POWER CONVERSION AND DISTRIBUTION REQUIRED TO PROPERLY POWER THE VAV BOX CONTROL SYSTEM. A MAXIMUM OF FOUR VAV BOXES SHALL BE SERVED BY EACH POWER CONVERSION/DISTRIBUTION DEVICE. DRIVE OPEN / DRIVE CLOSE ACTUATORS SHALL BE ACCEPTABLE FOR USE WITH THE HOT WATER COIL CONTROL VALVES.

RUN CONDITIONS:
THE UNIT SHALL OPERATE IN AN OCCUPIED MODE, EXCEPT DURING SCHEDULED UNOCCUPIED PERIODS:
OCCUPIED MODE: THE UNIT SHALL MAINTAIN
A 70°F (ADJ.) COOLING SETPOINT
A 70°F (ADJ.) HEATING SETPOINT.
UNOCCUPIED MODE: THE UNIT SHALL MAINTAIN
A 75°F (ADJ.) COOLING SETPOINT.
A 65°F (ADJ.) HEATING SETPOINT.

ALARMS SHALL BE PROVIDED AS FOLLOWS:
HIGH ZONE TEMP: IF THE ZONE TEMPERATURE IS GREATER THAN THE COOLING SETPOINT BY A USER DEFINABLE AMOUNT (ADJ.).
LOW ZONE TEMP: IF THE ZONE TEMPERATURE IS LESS THAN THE HEATING SETPOINT BY A USER DEFINABLE AMOUNT (ADJ.).

ZONE SETPOINT ADJUST:
THE OCCUPANT SHALL BE ABLE TO ADJUST THE ZONE TEMPERATURE HEATING AND COOLING SETPOINTS AT THE ZONE SENSOR.

WARM UP MODE:
VAV W/REHEAT: THE DDC NETWORK SHALL INITIATE THE WARM-UP MODE FOR THE DDC VAV BOXES. IN THE WARM-UP MODE WITH THE SPACE TEMPERATURE BELOW THE MORNING WARM-UP SETPOINT, THE CONTROLLER SHALL PROVIDE MAXIMUM CFM IN CONJUNCTION WITH MODULATING THE VALVE OPEN ON THE HW COIL. AS WARM-UP SETPOINT IS APPROACHED, THE CONTROLLER SHALL MODULATE THE CFM TO ITS MINIMUM SETTING AND THE REHEAT VALVE SHALL BE CLOSED. THE WARM-UP MODE SHALL BE TERMINATED LOCALLY AT THE CONTROLLER WHEN WARM-UP SETPOINT IS REACHED, OR REMOTELY FROM THE DDC NETWORK AT ZONE OCCUPIED TIME.

ZONE UNOCCUPIED OVERRIDE:
A TIMED LOCAL OVERRIDE CONTROL SHALL ALLOW AN OCCUPANT TO OVERRIDE THE SCHEDULE AND PLACE THE UNIT INTO AN OCCUPIED MODE FOR AN ADJUSTABLE PERIOD OF TIME. AT THE EXPIRATION OF THIS TIME, CONTROL OF THE UNIT SHALL AUTOMATICALLY RETURN TO THE SCHEDULE.

VARIABLE VOLUME TERMINAL UNIT - FLOW CONTROL:
THE UNIT SHALL MAINTAIN ZONE SETPOINTS BY CONTROLLING THE AIRFLOW THROUGH ONE OF THE FOLLOWING:

VAV W/REHEAT OCCUPIED: THE DAMPER SHALL BE OPEN TO MAINTAIN A MINIMUM SCHEDULED AIR FLOW. WHENEVER THE ROOM TEMPERATURE DROPS TO THE HEATING SETPOINT, THE REHEAT VALVE SHALL MODULATE OPEN THROUGHOUT THE REHEAT THROTTLING RANGE. WHENEVER THE ROOM TEMPERATURE RISES, THE REHEAT VALVE SHALL MODULATE CLOSED UNTIL FULLY CLOSED AT THE REHEAT SETPOINT. WHENEVER THE ROOM TEMPERATURE RISES TO THE COOL THROTTLING RANGE, THE DAMPER SHALL MODULATE OPEN THROUGHOUT THE COOL THROTTLING RANGE UNTIL BOX REACHES SCHEDULED MAXIMUM AIR FLOW. WHENEVER THE ROOM TEMPERATURE DROPS, THE DAMPER SHALL MODULATE CLOSED THROUGHOUT THE COOL THROTTLING RANGE TO MAINTAIN A MINIMUM SCHEDULED AIR FLOW.

UNOCCUPIED: THE VAV BOX SHALL OPERATE IN AN UNOCCUPIED MODE WHEN PROGRAMMED INTO THE SCHEDULE. THE DAMPER SHALL OPERATE AS IN THE OCCUPIED MODE, EXCEPT AT A LOWER HEATING SETPOINT (ADJ) AND A HIGHER COOLING SETPOINT (ADJ).

REHEATING COIL VALVE:
THE CONTROLLER SHALL MEASURE THE ZONE TEMPERATURE AND MODULATE THE REHEATING COIL VALVE OPEN ON DROPPING TEMPERATURE TO MAINTAIN ITS HEATING SETPOINT.

RADIANT PANEL VALVE:
FOR SPACES WITH RADIANT PANEL AND A VVB BOX, A MODULATING VALVE SHALL BE PROVIDED TO ENABLE HEATING AT THE RADIANT PANEL. THE VALVE SHALL ONLY BE ENABLED TO OPEN WHEN OUTDOOR AIR TEMPERATURE IS LESS THAN 40°F (ADJ) AND THERE IS A CALL FOR HEATING. WHEN THERE IS A CALL FOR HEATING, THE CONTROLLER SHALL MODULATE THE RADIANT PANEL VALVE SIMULTANEOUSLY WITH THE REHEAT COIL VALVE TO MAINTAIN HEATING SETPOINT.

DISCHARGE AIR TEMPERATURE:
THE CONTROLLER SHALL MONITOR THE DISCHARGE AIR TEMPERATURE.

ALARMS SHALL BE PROVIDED AS FOLLOWS:
HIGH DISCHARGE AIR TEMP: IF THE DISCHARGE AIR TEMPERATURE IS GREATER THAN 120°F (ADJ.).
LOW DISCHARGE AIR TEMP: IF THE DISCHARGE AIR TEMPERATURE IS LESS THAN 40°F (ADJ.).

ZONE SCHEDULE:
THE ATC CONTRACTOR SHALL MEET WITH THE OWNER TO DETERMINE THE ROOMS OR ZONES FOR OCCUPANCY SCHEDULING. TYPICAL ROOMS TO BE SCHEDULED ARE OFFICES, CONFERENCE ROOMS, AND AREAS NOT OCCUPIED 24/7.

	HARDWARE POINTS				SOFTWARE POINTS					
POINT NAME	AI	AO	DI	DO	AV	DV	SCHED	TREND	ALARM	GRAPHIC
ZONE TEMP	•							•		•
ZONE TEMP SETPOINT ADJUST	•							•		•
ZONE OVERRIDE			•					•		•
AIRFLOW	•							•		•
DISCHARGE AIR TEMP	•							•		•
ZONE DAMPER		•								•
REHEATING VALVE		•								•
RADIANT PANEL VALVE		•								•
OCCUPANCY SENSOR STATUS			•							•
AIRFLOW SETPOINT					•					•
HEATING MODE						•				
SCHEDULE							•			
HEATING SETPOINT								•		•
COOLING SETPOINT								•		•
HIGH ZONE TEMP									•	
LOW ZONE TEMP									•	
HIGH DISCHARGE AIR TEMP									•	
LOW DISCHARGE AIR TEMP									•	

NOTE: PROVIDE ANY ADDITIONAL POINTS REQUIRED FOR SEQUENCES OF OPERATION

VARIABLE AIR VOLUME BOX (VVB) CONTROL DIAGRAM

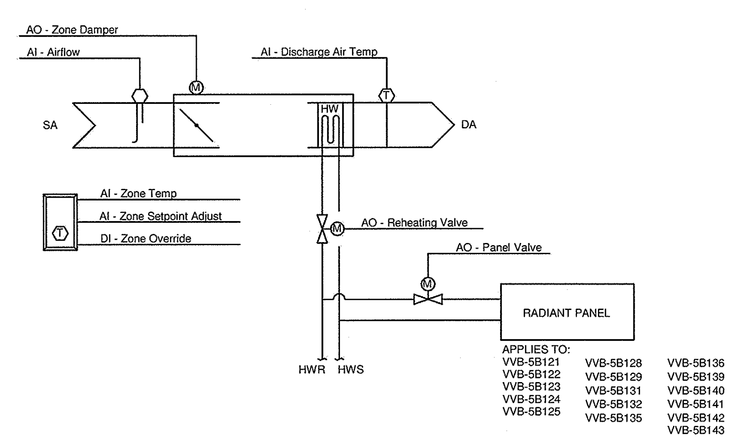

VARIABLE AIR VOLUME BOX W/ TRACKING EXHAUST

GENERAL:
120 VAC POWER SHALL BE SUPPLIED TO A JUNCTION BOX BY THE PROJECT ELECTRICAL CONTRACTOR. IT WILL BE THIS CONTRACTOR'S RESPONSIBILITY TO PROVIDE ANY AND ALL POWER CONVERSION AND DISTRIBUTION REQUIRED TO PROPERLY POWER THE VAV BOX CONTROL SYSTEM. A MAXIMUM OF FOUR VAV BOXES SHALL BE SERVED BY EACH POWER CONVERSION/DISTRIBUTION DEVICE. DRIVE OPEN / DRIVE CLOSE ACTUATORS SHALL BE ACCEPTABLE FOR USE WITH THE HOT WATER COIL CONTROL VALVES.

RUN CONDITIONS:
THE UNIT SHALL OPERATE IN AN OCCUPIED MODE, EXCEPT DURING SCHEDULED OCCUPIED PERIODS:
OCCUPIED MODE: THE UNIT SHALL MAINTAIN
A 70°F (ADJ.) COOLING SETPOINT
A 70°F (ADJ.) HEATING SETPOINT.
UNOCCUPIED MODE: THE UNIT SHALL MAINTAIN
A 75°F (ADJ.) COOLING SETPOINT.
A 65°F (ADJ.) HEATING SETPOINT.

ALARMS SHALL BE PROVIDED AS FOLLOWS:
HIGH ZONE TEMP: IF THE ZONE TEMPERATURE IS GREATER THAN THE COOLING SETPOINT BY A USER DEFINABLE AMOUNT (ADJ.).
LOW ZONE TEMP: IF THE ZONE TEMPERATURE IS LESS THAN THE HEATING SETPOINT BY A USER DEFINABLE AMOUNT (ADJ.).

ZONE SETPOINT ADJUST:
THE OCCUPANT SHALL BE ABLE TO ADJUST THE ZONE TEMPERATURE HEATING AND COOLING SETPOINTS AT THE ZONE SENSOR.

WARM UP MODE:
VAV W/REHEAT: THE DDC NETWORK SHALL INITIATE THE WARM-UP MODE FOR THE DDC VAV BOXES. IN THE WARM-UP MODE WITH THE SPACE TEMPERATURE BELOW THE MORNING WARM-UP SETPOINT, THE CONTROLLER SHALL PROVIDE MAXIMUM CFM IN CONJUNCTION WITH MODULATING THE VALVE OPEN ON THE HW COIL . AS WARM-UP SETPOINT IS APPROACHED, THE CONTROLLER SHALL MODULATE THE CFM TO ITS MINIMUM SETTING AND THE REHEAT VALVE SHALL BE CLOSED. THE WARM-UP MODE SHALL BE TERMINATED LOCALLY AT THE CONTROLLER WHEN WARM-UP SETPOINT IS REACHED, OR REMOTELY FROM THE DDC NETWORK AT ZONE OCCUPIED TIME.

ZONE UNOCCUPIED OVERRIDE:
A TIMED LOCAL OVERRIDE CONTROL SHALL ALLOW AN OCCUPANT TO OVERRIDE THE SCHEDULE AND PLACE THE UNIT INTO AN OCCUPIED MODE FOR AN ADJUSTABLE PERIOD OF TIME. AT THE EXPIRATION OF THIS TIME, CONTROL OF THE UNIT SHALL AUTOMATICALLY RETURN TO THE SCHEDULE.

EXHAUST AIR TRACKING BOX - FLOW CONTROL :
THE CONTROLLER SHALL MEASURE THE SUPPLY AIR FLOW AND MODULATE THE EXHAUST AIRFLOW TO TRACK THE SUPPLY TO MAINTAIN ROOM AIRFLOW DIFFERENTIAL.

VARIABLE VOLUME TERMINAL UNIT - FLOW CONTROL:
THE UNIT SHALL MAINTAIN ZONE SETPOINTS BY CONTROLLING THE AIRFLOW THROUGH ONE OF THE FOLLOWING:

VAV W/REHEAT OCCUPIED: THE DAMPER SHALL BE OPEN TO MAINTAIN A MINIMUM SCHEDULED AIR FLOW. WHENEVER THE ROOM TEMPERATURE DROPS TO THE HEATING SETPOINT, THE REHEAT VALVE SHALL MODULATE OPEN THROUGHOUT THE REHEAT THROTTLING RANGE. WHENEVER THE ROOM TEMPERATURE RISES, THE REHEAT VALVE SHALL MODULATE CLOSED UNTIL FULLY CLOSED AT THE REHEAT SETPOINT. WHENEVER THE ROOM TEMPERATURE RISES TO THE COOL THROTTLING RANGE, THE DAMPER SHALL MODULATE OPEN THROUGHOUT THE COOL THROTTLING RANGE UNTIL BOX REACHES SCHEDULED MAXIMUM AIR FLOW. WHENEVER THE ROOM TEMPERATURE DROPS, THE DAMPER SHALL MODULATE CLOSED THROUGHOUT THE COOL THROTTLING RANGE TO MAINTAIN A MINIMUM SCHEDULED AIR FLOW.

UNOCCUPIED: THE VAV BOX SHALL OPERATE IN AN UNOCCUPIED MODE WHEN PROGRAMMED INTO THE SCHEDULE. THE DAMPER SHALL OPERATE AS IN THE OCCUPIED MODE, EXCEPT AT A LOWER HEATING SETPOINT (ADJ) AND A HIGHER COOLING SETPOINT (ADJ).

REHEATING COIL VALVE:
THE CONTROLLER SHALL MEASURE THE ZONE TEMPERATURE AND MODULATE THE REHEATING COIL VALVE OPEN ON DROPPING TEMPERATURE TO MAINTAIN ITS HEATING SETPOINT.

RADIANT PANEL VALVE:
FOR SPACES WITH RADIANT PANEL AND A VVB BOX, A MODULATING VALVE SHALL BE PROVIDED TO ENABLE HEATING AT THE RADIANT PANEL. THE VALVE SHALL ONLY BE ENABLED TO OPEN WHEN OUTDOOR AIR TEMPERATURE IS LESS THAN 40°F (ADJ) AND THERE IS A CALL FOR HEATING. WHEN THERE IS A CALL FOR HEATING, THE CONTROLLER SHALL MODULATE THE RADIANT PANEL VALVE SIMULTANEOUSLY WITH THE REHEAT COIL VALVE TO MAINTAIN HEATING SETPOINT.

DISCHARGE AIR TEMPERATURE:
THE CONTROLLER SHALL MONITOR THE DISCHARGE AIR TEMPERATURE.

ALARMS SHALL BE PROVIDED AS FOLLOWS:
HIGH DISCHARGE AIR TEMP: IF THE DISCHARGE AIR TEMPERATURE IS GREATER THAN 120°F (ADJ.).
LOW DISCHARGE AIR TEMP: IF THE DISCHARGE AIR TEMPERATURE IS LESS THAN 40°F (ADJ.).

ZONE SCHEDULE:
THE ATC CONTRACTOR SHALL MEET WITH THE OWNER TO DETERMINE THE ROOMS OR ZONES FOR OCCUPANCY SCHEDULING. TYPICAL ROOMS TO BE SCHEDULED ARE OFFICES, CONFERENCE ROOMS, AND AREAS NOT OCCUPIED 24/7.

	HARDWARE POINTS				SOFTWARE POINTS					
POINT NAME	AI	AO	DI	DO	AV	DV	SCHED	TREND	ALARM	GRAPHIC
ZONE TEMP	•							•		•
ZONE TEMP SETPOINT ADJUST	•									•
AIRFLOW	•							•		•
DISCHARGE AIR TEMP	•							•		•
EXHAUST AIRFLOW	•							•	•	•
ROOM PRESSURE	•							•	•	•
ZONE PRESSURE SETPOINT ADJUST	•									•
ZONE DAMPER		•							•	•
EXHAUST AIR DAMPER		•						•		•
REHEATING VALVE		•						•		•
ZONE OVERRIDE			•					•		•
HEATING SETPOINT								•		•
COOLING SETPOINT								•		•
AIRFLOW SETPOINT					•			•		•
HEATING MODE						•		•		
SCHEDULE							•			
HIGH ZONE TEMP									•	
LOW ZONE TEMP									•	
HIGH DISCHARGE AIR TEMP									•	
LOW DISCHARGE AIR TEMP									•	
HIGH ZONE DIFFERENTIAL PRESSURE									•	
LOW ZONE DIFFERENTIAL PRESSURE									•	
OCCUPANCY SENSOR STATUS			•					•		•

NOTE: PROVIDE ANY ADDITIONAL POINTS REQUIRED FOR SEQUENCES OF OPERATION

VARIABLE AIR VOLUME BOX AND W/ TRACKING EXHAUST

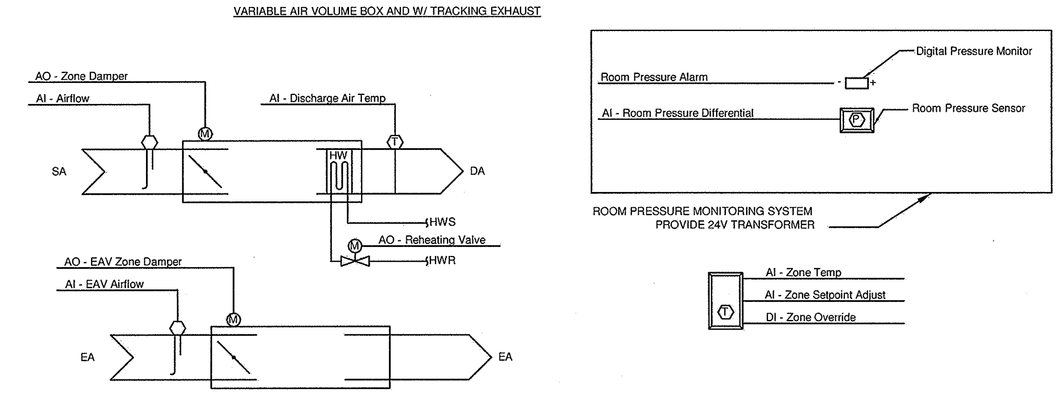

FULLY SPRINKLERED
ISSUED FOR BID

Revisions	Date

VA FORM 08-6231, OCT 1978

CONSULTANTS:
MEP AND STRUCTURAL ENGINEER
H.F. LENZ COMPANY
1407 Scalp Avenue
Johnstown, PA 15904
Tel (814) 269-9300
www.hflenz.com

KEY PLAN:
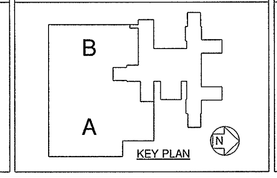

KEY PLAN

COMMONWEALTH OF PENNSYLVANIA REGISTERED PROFESSIONAL ENGINEER TIMOTHY M. EARHART No. PE-042237-E

ARCHITECT:
ARCHITECT
VDG
Vision Design Group
2200 Dunbarton Drive Suite F
Chesapeake, VA 23325
Tel (757) 477-8608

ENVIRONMENTAL CONSULTANT
Earth Smart Environmental Solutions, LLC
232 S. Dillard Street, Suite 230
Winter Garden, FL 34787-3516

Project Number	Scale
	As indicated

Drawing Title: MECHANICAL CONTROLS
Approved: Project Director

Project Title: REPLACEMENT OF AC-27
Location: 3900 WOODLAND AVENUE PHILADELPHIA, PA 19104
Date: 10/26/12 | Checked: TME | Drawn: RWB

VA Project Number: 642-11-160
Building Number: 2
Drawing Number: MH-AC27-701
Dwg. 16 of 24

Office of Facilities Management
Department of Veterans Affairs

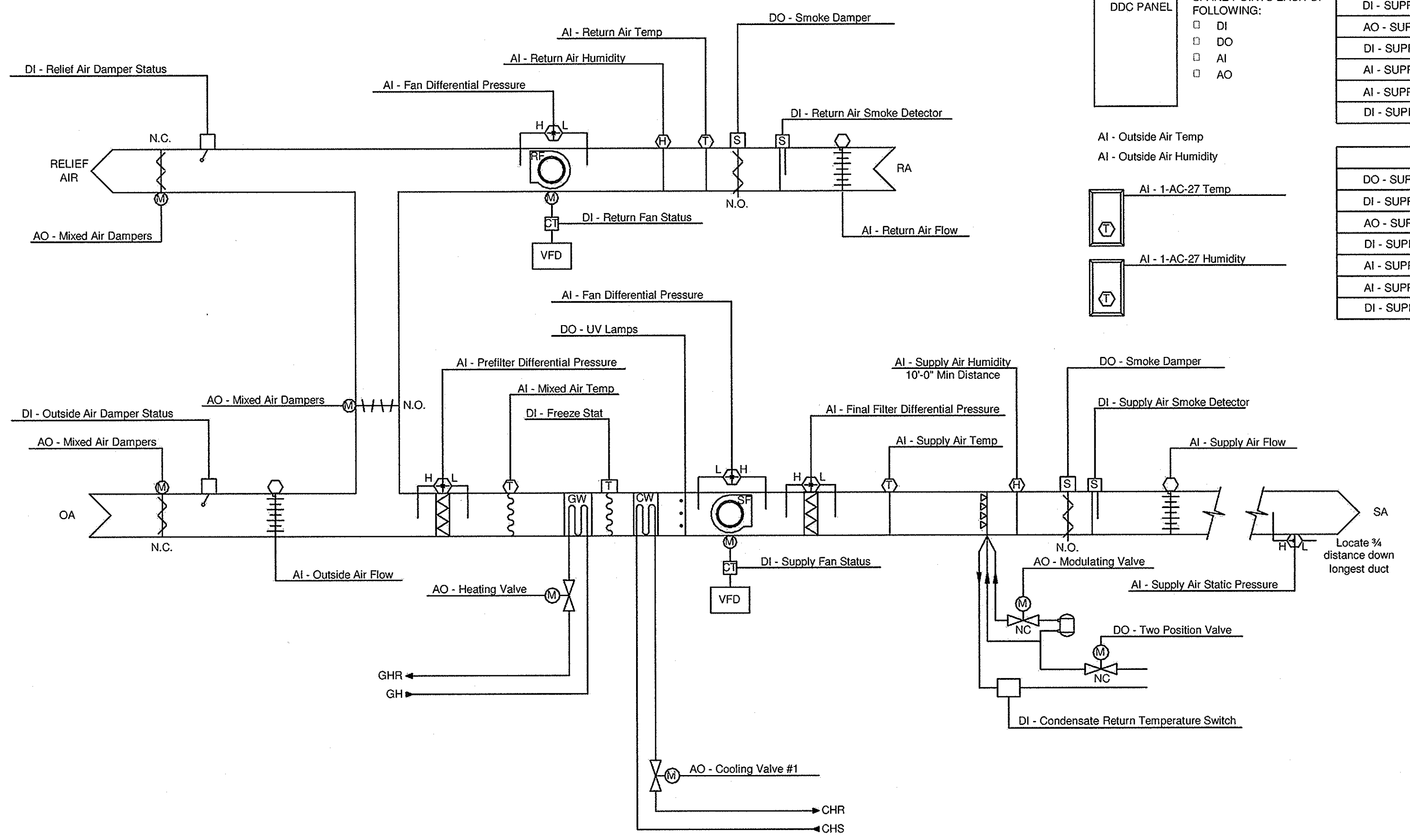

1-AC-27 CONTROL DIAGRAM

DDC PANEL

PROVIDE WITH MIN 25% SPARE POINTS EACH OF FOLLOWING:
- DI
- DO
- AI
- AO

AI - Outside Air Temp
AI - Outside Air Humidity
AI - 1-AC-27 Temp
AI - 1-AC-27 Humidity

SUPPLY FAN VFD
DO - SUPPLY FAN - S/S
DI - SUPPLY FAN - STATUS
AO - SUPPLY FAN - SPEED CONTROL
DI - SUPPLY FAN - VFD RUN STATUS
AI - SUPPLY FAN - VFD CURRENT
AI - SUPPLY FAN - VFD POWER
DI - SUPPLY FAN - VFD ALARM STATUS

RETURN FAN VFD
DO - SUPPLY FAN - S/S
DI - SUPPLY FAN - STATUS
AO - SUPPLY FAN - SPEED CONTROL
DI - SUPPLY FAN - VFD RUN STATUS
AI - SUPPLY FAN - VFD CURRENT
AI - SUPPLY FAN - VFD POWER
DI - SUPPLY FAN - VFD ALARM STATUS

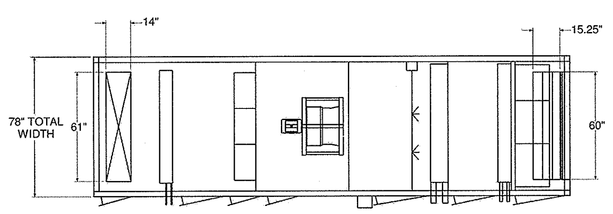

PLAN VIEW

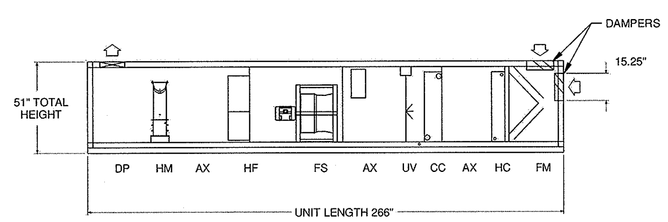

SECTION VIEW

UNIT SEGMENTS

DP	DISCHARGE PLENUM
HM	HUMIDIFIER
AX	ACCESS
HF	HIGH EFFICIENCY FILTER
FS	FAN SECTION
UV	ULTRA VIOLET LIGHT
CC	COOLING COIL
HC	HEATING COIL
FM	FILTER MIXING BOX

1-AC-27 SEQUENCES OF OPERATION

RUN CONDITIONS - REQUESTED:
THE UNIT SHALL RUN CONTINUOUSLY.

EMERGENCY SHUTDOWN:
THE UNIT SHALL SHUT DOWN AND GENERATE AN ALARM UPON RECEIVING AN EMERGENCY SHUTDOWN SIGNAL.

FREEZE PROTECTION:
THE UNIT SHALL SHUT DOWN AND GENERATE AN ALARM UPON RECEIVING A FREEZESTAT STATUS.

SMOKE DETECTION:
THE UNIT SHALL SHUT DOWN AND GENERATE AN ALARM UPON RECEIVING A SMOKE DETECTOR STATUS.

SUPPLY AIR TEMPERATURE SETPOINT:
WHEN INDEXED TO THE OCCUPIED COOLING MODE BY THE DDC SYSTEM, THE UNIT SUPPLY AND RETURN AIR FANS SHALL RUN CONTINUOUSLY AND THE MODULATING OUTDOOR AIR DAMPER AND RELIEF AIR DAMPER SHALL OPEN TO THEIR SCHEDULED MINIMUM POSITION. WHEN THE OUTDOOR AIR TEMPERATURE IS BELOW 50 DEGF (ADJ.), THE HEATING COIL CONTROL VALVE SHALL MODULATE OPEN TO THE HEATING COIL TO MAINTAIN SUPPLY AIR TEMPERATURE AS DETERMINED BY THE FOLLOWING FULLY ADJUSTABLE RESET SCHEDULE. ON A RISE IN SUPPLY AIR TEMPERATURE ABOVE SETPOINT (ADJ.), THE HEATING COIL CONTROL VALVE SHALL MODULATE CLOSED TO THE COIL. ON A FURTHER RISE IN SUPPLY AIR TEMPERATURE, THE OUTDOOR AIR DAMPER SHALL MODULATE OPEN FROM ITS MINIMUM SETTING TO 100% OPEN. THE RETURN AIR DAMPERS AND RELIEF AIR DAMPERS SHALL MODULATE CLOSED ACCORDINGLY. WHENEVER THE OUTDOOR AIR TEMPERATURE RISES ABOVE 50 DEGF (ADJ.), THE CONTROL VALVE SHALL BE CLOSED TO THE HEATING COIL. IF MECHANICAL COOLING IS NOT AVAILABLE, THE OUTDOOR AND RETURN AIR DAMPERS SHALL MODULATE IN AN ATTEMPT TO MAINTAIN SUPPLY AIR SETPOINT AS DETERMINED BY AN OPERATOR ADJUSTABLE (ADJ.) RESET SCHEDULE.

OAT	SAT
20 DEGF & LOWER	65 DEGF
65 DEGF & ABOVE	55 DEGF

ON A RISE IN OUTDOOR AIR TEMPERATURE ABOVE ECONOMIZER ENABLE SETPOINT (ADJ.), THE O.A. DAMPER SHALL BE POSITIONED TO SCHEDULED MINIMUM O.A. POSITION, THE RETURN AIR DAMPERS AND RELIEF AIR DAMPERS SHALL POSITION ACCORDINGLY, AND THE COOLING COIL SHALL CYCLE AS REQUIRED TO MAINTAIN SUPPLY AIR TEMPERATURE SETPOINT

ALARMS SHALL BE PROVIDED AS FOLLOWS:
- OUTSIDE AIR DAMPER FAILURE: COMMANDED OPEN, BUT THE STATUS IS CLOSED.
- OUTSIDE AIR DAMPER IN HAND: COMMANDED CLOSED, BUT THE STATUS IS OPEN.
- RELIEF AIR DAMPER FAILURE: COMMANDED OPEN, BUT THE STATUS IS CLOSED.
- RELIEF AIR DAMPER IN HAND: COMMANDED CLOSED, BUT THE STATUS IS OPEN.

RELIEF AIR DAMPER CONTROL: THE DDC SYSTEM SHALL MODULATE THE RELIEF AIR DAMPER TO MAINTAIN AN OFFSET OF CFM (ADJ.) BETWEEN OUTDOOR AIR AND EXHAUST AIR QUANTITIES.

SUPPLY FAN:
SUPPLY AIR FAN CAPACITY CONTROL: WHEN THE SUPPLY AIR FAN HAS BEEN ENERGIZED AND ITS STATUS HAS BEEN VERIFIED, THE FAN CAPACITY CONTROL LOOPS SHALL BE ENABLED. THE REMOTE SUPPLY AIR DUCT STATIC PRESSURE SENSOR SHALL MODULATE THE SUPPLY AIR FAN VARIABLE SPEED DRIVE TO MAINTAIN A SUPPLY AIR DUCT STATIC PRESSURE SETPOINT OF 1.00 IN. W.C. (ADJ.). THE DUCT STATIC PRESSURE TRANSDUCER SHALL BE REFERENCED TO THE SERVICE SPACE VIA A SPACE TYPE SHIELDED STATIC PRESSURE PROBE. THE VSD SPEED SHALL BE VARIED AS REQUIRED TO MAINTAIN REMOTE STATIC SETPOINT SUBJECT TO HIGH POSITIVE AND HIGH NEGATIVE SUPPLY FAN STATIC PRESSURE LIMITS. DDC SHALL POLL VAV BOX POSITIONS AND REDUCE THE STATIC PRESSURE SENSOR SETPOINT TO MAINTAIN MINIMUM REQUIRED SP AT EACH VAV BOX (95% OPEN OF ANY ONE BOX WILL BE THRESHOLD).

ALARMS SHALL BE PROVIDED AS FOLLOWS:
- SUPPLY FAN FAILURE: COMMANDED ON, BUT THE STATUS IS OFF.
- SUPPLY FAN IN HAND: COMMANDED OFF, BUT THE STATUS IS ON.
- SUPPLY FAN RUNTIME EXCEEDED: STATUS RUNTIME EXCEEDS A USER DEFINABLE LIMIT (ADJ.).

RETURN FAN:
RETURN AIR FAN CAPACITY CONTROL: WHEN THE RETURN AIR FAN HAS BEEN ENERGIZED AND ITS STATUS HAS BEEN VERIFIED, THE FAN CAPACITY CONTROL LOOPS SHALL BE ENABLED. THE VSD SPEED SHALL BE VARIED AS REQUIRED TO MAINTAIN AN OFFSET OF CFM (ADJ.) BETWEEN SUPPLY AIR AND RETURN AIR QUANTITIES, SUBJECT TO HIGH POSITIVE AND HIGH NEGATIVE RETURN FAN STATIC PRESSURE LIMITS. AIRFLOW OFFSET SHALL BE THE DIFFERENCE OF SUPPLY AIR AND RETURN AIR DIFFUSER/REGISTER AIRFLOWS SCHEDULED ON DRAWINGS.

ALARMS SHALL BE PROVIDED AS FOLLOWS:
- RETURN FAN FAILURE: COMMANDED ON, BUT THE STATUS IS OFF.
- RETURN FAN IN HAND: COMMANDED OFF, BUT THE STATUS IS ON.
- RETURN FAN RUNTIME EXCEEDED: STATUS RUNTIME EXCEEDS A USER DEFINABLE LIMIT (ADJ.).

COOLING COIL VALVE:
THE CONTROLLER SHALL MEASURE THE SUPPLY AIR TEMPERATURE AND MODULATE THE PRIMARY COOLING COIL VALVE TO MAINTAIN DISCHARGE COOLING SETPOINT.

THE COOLING SHALL BE ENABLED WHENEVER:
- OUTSIDE AIR TEMPERATURE IS GREATER THAN 47°F (ADJ.).
- AND THE SUPPLY AIR TEMPERATURE IS ABOVE COOLING SETPOINT.
- AND THE FAN STATUS IS ON.

THE COOLING COIL VALVE SHALL OPEN TO 50% (ADJ.) WHENEVER THE FREEZESTAT IS ON.

HEATING COIL VALVE:
THE CONTROLLER SHALL MEASURE THE SUPPLY AIR TEMPERATURE AND MODULATE THE HEATING COIL VALVE TO MAINTAIN ITS HEATING SETPOINT.

THE HEATING SHALL BE ENABLED WHENEVER:
- OUTSIDE AIR TEMPERATURE IS LESS THAN 65°F (ADJ.).
- AND THE SUPPLY AIR TEMPERATURE IS BELOW HEATING SETPOINT.
- AND THE FAN STATUS IS ON.

THE HEATING COIL VALVE SHALL OPEN TO 100% (ADJ.) WHENEVER THE FREEZESTAT IS ON.

HUMIDIFICATION MODE:
THE SUPPLY AIR HIGH LIMIT HUMIDITY SENSOR SETPOINT SHALL BE CAPABLE OF BEING ADJUSTED FROM EITHER THE CENTRAL OR LOCAL DDC CONTROL PANEL.

THE RETURN AIR HUMIDITY SENSOR LOCATED IN THE RETURN AIR DUCT SHALL MODULATE THE UNIT'S HUMIDIFIER STEAM CONTROL VALVE TO MAINTAIN THE SPACE HUMIDITY. THE HIGH LIMIT HUMIDITY SENSOR SHALL MODULATE THE UNIT'S HUMIDIFIER STEAM CONTROL VALVE TO MAINTAIN A MINIMUM OF 35% ADJUSTABLE RELATIVE HUMIDITY IN THE SPACES. THE SUPPLY AIR HIGH LIMIT HUMIDITY SENSORS SHALL OVERRIDE THE RETURN AIR HUMIDITY SENSOR AND MODULATE THE HUMIDIFIER CONTROL VALVES TO MAINTAIN A MAXIMUM SUPPLY AIR RELATIVE HUMIDITY OF 80% (ADJ.). IF THE HUMIDITY SETPOINT CANNOT BE MAINTAINED WHEN THE HUMIDIFIERS ARE OPERATING, AN APPROPRIATE ALARM SHALL BE PROVIDED THROUGHOUT THE DDC NETWORK.

THE HUMIDIFIER STEAM CONDENSATE RETURN TEMPERATURE SWITCH SHALL FUNCTION TO CLOSE OFF THE HUMIDIFIER CONTROL VALVE UNTIL THE CONDENSATE TEMPERATURE APPROACHES STEAM TEMPERATURE. THE HUMIDIFIER CONTROL VALVE AND THE HUMIDIFIER STEAM SUPPLY VALVE WILL BE CLOSED TO THE HUMIDIFIER WHENEVER THE SUPPLY FAN IS OFF. THE TWO POSITION STEAM ISOLATION VALVE SHALL BE CLOSED WHEN THERE IS NO HUMIDIFICATION REQUIRED.

PREFILTER DIFFERENTIAL PRESSURE MONITOR:
THE CONTROLLER SHALL MONITOR THE DIFFERENTIAL PRESSURE ACROSS THE PREFILTER.

ALARMS SHALL BE PROVIDED AS FOLLOWS:
- PREFILTER CHANGE REQUIRED: PREFILTER DIFFERENTIAL PRESSURE EXCEEDS A USER DEFINABLE LIMIT (ADJ.).

FINAL FILTER DIFFERENTIAL PRESSURE MONITOR:
THE CONTROLLER SHALL MONITOR THE DIFFERENTIAL PRESSURE ACROSS THE FINAL FILTER.

ALARMS SHALL BE PROVIDED AS FOLLOWS:
- FINAL FILTER CHANGE REQUIRED: FINAL FILTER DIFFERENTIAL PRESSURE EXCEEDS A USER DEFINABLE LIMIT (ADJ.).

SUPPLY AIR TEMPERATURE:
THE CONTROLLER SHALL MONITOR THE SUPPLY AIR TEMPERATURE.

ALARMS SHALL BE PROVIDED AS FOLLOWS:
- HIGH SUPPLY AIR TEMP: IF THE SUPPLY AIR TEMPERATURE IS GREATER THAN 60°F (ADJ.).
- LOW SUPPLY AIR TEMP: IF THE SUPPLY AIR TEMPERATURE IS LESS THAN 45°F (ADJ.).

UV LAMPS:
THE UV LAMP SHALL BE ENABLED ANYTIME THE UNIT IS COMMANDED ON. THE UV LAMP SHALL HAVE A HARD WIRE INTERLOCK WITH THE ACCESS DOOR TO SHUT OFF THE UV LAMP WHENEVER THE DOOR IS OPEN.

AN ALARM SHALL BE PROVIDED WHENEVER THE ACCESS DOOR IS OPEN.

GRAPHICS AND MONITORING:
BAS FRONT END SYSTEM SHALL INCLUDE GRAPHICS SHOWING ALL HVAC SYSTEMS, ALARMS AND OTHER POINTS SHOWN ON THE DRAWINGS AND INCLUDED IN THE SPECIFICATIONS AND IN ACCORDANCE WITH VA REQUIREMENTS. VFDs SHALL REPORT OPERATIONAL AND ALARM CONDITIONS TO THE BAS.

DDC PANELS:
PROVIDE NETWORK AREA CONTROL PANELS IN ACCORDANCE WITH THE SPECS TO BE LOCATED IN THE RESPECTIVE MECHANICAL ROOMS TO SERVE TERMINAL BOXES AND OTHER EQUIPMENT.

FULLY SPRINKLERED
ISSUED FOR BID

Revisions	Date

CONSULTANTS:

MEP AND STRUCTURAL ENGINEER
H.F. LENZ COMPANY
1407 Scalp Avenue
Johnstown, PA 15904
Tel (814) 269-6300
www.hflenz.com

KEY PLAN:
B
A
KEY PLAN

COMMONWEALTH OF PENNSYLVANIA
REGISTERED PROFESSIONAL ENGINEER
TIMOTHY M. EARHART
No. PE-041537-E

ARCHITECT:

ARCHITECT
Vision Design Group
2200 Dunbarton Drive Suite F
Chesapeake, VA 23325
Tel (757) 477-8600

ENVIRONMENTAL CONSULTANT
Earth Smart Environmental Solutions, LLC
232 S. Dillard Street, Suite 230
Winter Garden, FL 34787-3516

Project Number	Scale
	As indicated

Drawing Title: MECHANICAL CONTROLS

Approved: Project Director

Project Title: REPLACEMENT OF AC-27

Location: 3900 WOODLAND AVENUE PHILADELPHIA, PA 19104

Date	Checked	Drawn
10/26/12	TME	RWB

VA Project Number: 642-11-160

Building Number: 2

Drawing Number: MH-AC27-702

Dwg. 17 of 24

Office of Facilities Management

Department of Veterans Affairs

VA FORM 08-6231, OCT 1978

ELECTRICAL LEGEND

SYMBOL	DESCRIPTION	SYMBOL	DESCRIPTION
CB	ENCLOSED CIRCUIT BREAKER		NON-DRAWOUT TYPE CIRCUIT BREAKER (600V OR LOWER)
T	TRANSFORMER	MCB XXAF XXXAT PNL 'XXX'	PANELBOARD OR LOADCENTER (MAIN CIRCUIT BREAKER)
Y	FINAL CONNECTION BY EC TO EQUIPMENT		
Y_{AIP}	FINAL CONNECTION BY EC TO AIR HANDLING UNIT INTERNAL POWER		
Y_{DDC}	FINAL CONNECTION BY EC TO DIRECT DIGITAL CONTROL PANEL		
Y_{RPM}	FINAL CONNECTION BY EC TO ROOM PRESSURE MONITOR		1' x 4' FLUORESCENT RECESSED
Y_{ETB}	FINAL CONNECTION BY EC TO EXHAUST TRACKING BOX		1' x 4' FLUORESCENT PENDANT
	COMBINATION DISCONNECT SWITCH AND STARTER	F_{DD}	FIRE ALARM SYSTEM DUCT DETECTOR BY EC. INSTALLED BY HC. ALARM WIRING BY EC. INTERLOCK WIRING TO HVAC EQUIPMENT BY HC (REFER TO DETAIL)
	FUSED DISCONNECT SWITCH		
	NON-FUSED DISCONNECT SWITCH	R	DISCONNECT, RELOCATE, AND RE-CONNECT BRANCH CIRCUIT CONDUCTORS
VFD	VARIABLE REQUENCY DRIVE - RATING AS NOTED	$M	MANUAL MOTOR SWITCH WITH OVERLOADS
M	MOTOR		
M_{MOD}	MOTOR OPERATED DAMPER - 120V-1ø		
J	JUNCTION BOX		
J_{VVB}	120V-1ø BRANCH CIRCUIT FOR VARIABLE VOLUME BOX TRANSFORMER PANEL. TRANSFORMER PANEL PROVIDED BY CONTROLS CONTRACTOR.		
	ELECTRICAL PANEL BOARD - SURFACE MOUNTED		
1	INDICATES NOTES ELSEWHERE		
	BRANCH CIRCUIT		
	HOMERUN TO PANEL BOARD - 3 #12-3/4"C UNO		
	CROSS HATCHING INDICATES EQUIPMENT AND/OR WIRING TO BE RENDERED DEAD AND REMOVED BY EC.		
H N L G	TICK MARKS - 'H' = HOT CONDUCTOR, 'N' = NEUTRAL CONDUCTOR, 'G' = GORUND CONDUCTOR		
Δ Y	TRANSFORMER		
M	MOTOR		
N* E L	AUTOMATIC TRANSFER SWITCH		

LEGEND:

- WIRING BY ELECTRICAL CONTRACTOR
- WIRING BY HEATING CONTRACTOR
- IAM — INDIVIDUAL ADDRESSABLE MODULE
- F_{DD} — FIRE ALARM SYSTEM DUCT DETECTOR
- F_{SD} — FIRE ALARM SYSTEM SMOKE DETECTOR

NOTES:

1. DUCT DETECTOR FURNISHED BY THE ELECTRICAL CONTRACTOR, INSTALLED BY THE HEATING CONTRACTOR AND ALL WIRING BY THE ELECTRICAL CONTRACTOR UNLESS NOTED OTHERWISE.
2. ELECTRICAL CONTRACTOR SHALL COORDINATE EXTERNAL RELAY VOLTAGES AND RATINGS WITH THE HEATING CONTRACTOR OR ATC CONTRACTOR.

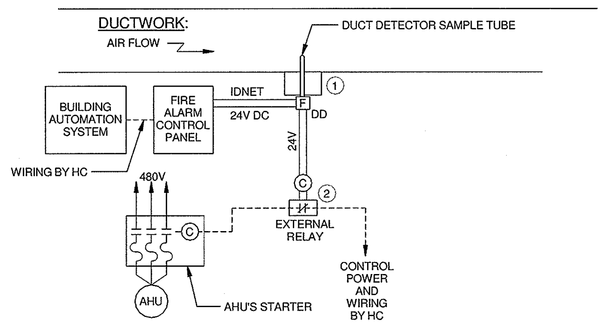

1 TYPICAL AIR HANDLER/DUCT DETECTOR WIRING DIAGRAM

NOT TO SCALE

ELECTRICAL ABBREVIATIONS

1ø	SINGLE - PHASE
1P	SINGLE POLE
3ø	THREE - PHASE
4/C	FOUR - CONDUCTOR
4W	FOUR - WIRE
A/C UNIT	AIR CONDITIONING UNIT
A/E	ARCHITECT/ENGINEER
AB	ABOVE
AC	ALTERNATING CURRENT OR ARMORED CABLE
ACC	ACCESSIBLE
ADDL	ADDITIONAL
ADJ	ADJACENT, ADJOINING
AFC	ABOVE FINISHED COUNTER
AFF	ABOVE FINISHED FLOOR
AFG	ABOVE FINISHED GRADE
AHJ	AUTHORITY HAVING JURISDICTION
ALT	ALTERNATE
AMB or A	AMBIENT
ARCH	ARCHITECT
ATS	AUTOMATIC TRANSFER
AUTO	AUTOMATIC
BFF	BELOW FINISHED FLOOR
BLDG	BUILDING
BYP	BY-PASS
C	CONDUIT
CAT	CATALOG
CC	CRITICAL CARE
CD	CONSTRUCTION DOCUMENTS
CF	CONTRACTOR FURNISHED
CF/CI	CONTRACTOR FURNISHED/CONTRACTOR INSTALLED
CF/OI	CONTRACTOR FURNISHED/OWNER INSTALLED
CFE	CONTRACTOR FURNISHED EQUIPMENT
CLG	CEILING
CONC	CONCRETE
CONT	CONTINUE
CONTR	CONTRACTOR
COORD	COORDINATE
CU	COPPER
CUR	CURRENT
DEMO	DEMOLITION
DISTR	DISTRIBUTION
DN	DOWN
DWG	DRAWING
EC	EMPTY CONDUIT
EE	ESSENTIAL EQUIPMENT
EG	EQUIPMENT GROUND
ELEC	ELECTRIC or ELECTRICAL
EMER	EMERGENCY
EMT	ELECTRICAL METALLIC TUBING
ENCL	ENCLOSURE
ETR	EXISTING TO REMAIN
EX or EXIST	EXISTING

ELECTRICAL ABBREVIATIONS

FP	FIRE PROTECTION
FT	FEET or FOOT
FU SW	FUSED SWITCH
G or GND	GROUND
HOA	HAND-OFF-AUTOMATIC
HT	HEIGHT
HZ	HERTZ
IMC	INTERMEDIATE METAL CONDUIT
J-BOX	JUNCTION BOX
LF	LINEAR FEET (FOOT)
LS	LIFE SAFETY
LV	LOW VOLTAGE
MAX	MAXIMUM
MECH	MECHANICAL
MIN	MINIMUM
MT	MOUNT
MTD	MOUNTED
MTG	MOUNTING
NA	NOT APPLICABLE
NEC	NATIONAL ELECTRICAL CODE
NEUT or N	NEUTRAL
NIC	NOT IN CONTRACT
NS	NO SCALE
NTS	NOT TO SCALE
OC	ON CENTER
OD	OUTSIDE DIAMETER
P	POLE
PB	PANELBOARD or PULL BOX or PUSHBUTTON
PF	POWER FACTOR
PH	PHASE
PNL	PANEL
PWR	POWER
REC	RECESSED
RECPT	RECEPTACLE
RM	ROOM
REQD	REQUIRED
SF	SQUARE FOOT (FEET)
SHT	SHEET
SPEC	SPECIFICATION
SW	SWITCH
TEL	TELEPHONE
TP	TWISTED PAIR
TPS	TWISTED PAIR SHIELDED
TTB	TELEPHONE TERMINAL BOARD
TV	TELEVISION
TYP	TYPICAL
UL	UNDERWRITERS LABORATORY
UNO	UNLESS NOTED OTHERWISE
UPS	UNINTERRUPTIBLE POWER SUPPLY
UTIL	UTILITY
V	VOLTAGE
WP	WEATHERPROOF

GENERAL NOTES

1. HOMERUN CONDUITS TO BRANCH PANELS SHALL CONTAIN NO MORE THAN THREE, 3-WIRE (3 #12) BRANCH CIRCUITS. EACH BRANCH CIRCUIT SHALL HAVE A SEPARATE GREEN INSULATED EQUIPMENT GROUNDING CONDUCTOR.
2. MULTI-GANG BACKBOXES FOR DIFFERENT VOLTAGES AND TYPES OF EMERGENCY AND NORMAL BRANCH WIRING DEVICES SHALL HAVE DIVIDERS BETWEEN DEVICES.
3. IT IS CALLED TO THE CONTRACTORS ATTENTION THAT THE INTENT OF THE DRAWINGS AND SPECIFICATIONS IS TO INSTALL ALL NEW WIRING CONCEALED (FISHED THRU OPENINGS IN EXISTING BUILDING CONSTRUCTION) IN FINISH AREAS OF THE BUILDING CONSTRUCTION. THE USE OF EXPOSED SURFACE RACEWAYS WILL NOT BE PERMITTED UNLESS APPROVED BY THE RESIDENT ENGINEER. WHERE BUILDING CONSTRUCTION MUST BE CUT TO CONCEAL NEW CONDUIT AND WIRING THE CONTRACTOR SHALL SAW CUT A CHANNEL IN BUILDING CONSTRUCTION, INSTALL NEW CONDUIT AND PATCH FINISH DISTURBED AREAS TO MATCH ADJACENT SURFACES AS APPROVED BY THE ARCHITECT.
4. ALL ELECTRICAL WORK SHALL BE INSTALLED IN ACCORDANCE WITH THE LATEST NATIONAL ELECTRICAL CODE, IN PARTICULAR ARTICLE #517, AND ALL APPLICABLE FEDERAL, STATE, AND LOCAL CODES.
5. ALL WIRE, CONDUIT, CONNECTORS, OUTLETS, BOXES, ETC. NECESSARY TO ACHIEVE A COMPLETE ELECTRICAL INSTALLATION SHALL BE PROVIDED. WHERE AN ELECTRICAL DEVICE IS REQUIRED BY CODE BUT NOT SHOWN SHALL BE PROVIDED AS THOUGH FULLY SHOWN AND SPECIFIED.
6. ALL CONDUIT, JUNCTION BOXES, ETC. ABOVE CEILING SHALL BE SUPPORTED FROM THE BUILDING DECK.
7. NEW OPENINGS, CHASES IN WALLS, FLOORS AND PARTITIONS FOR CONDUIT, HANGERS, SUPPORTS AND OTHER EQUIPMENT IN THE EXISTING BUILDING SHALL BE PROVIDED AS REQUIRED FOR THE NEW AND REMODELED INSTALLATION, NEW OPENINGS IN EXISTING CONSTRUCTION AND THE REPAIR OF SUCH OPENINGS FOR THE ENTRANCE OF NEW EQUIPMENT INTO THE BUILDING OR FOR THE REMOVAL OF EXISTING EQUIPMENT IN THE BUILDING SHALL BE PROVIDED BY THE CONTRACTOR.
8. NO CUTTING OF BUILDING CONSTRUCTION SHALL BE DONE WHICH IN ANYWAY AFFECT THE BUILDING STRUCTURALLY OR ARCHITECTURALLY WITHOUT FIRST SECURING THE COTR'S CONSENT AND APPROVAL.
9. NO CONDUITS SHALL BE RUN THROUGH OR SUPPORTED FROM DUCTWORK.
10. AFTER CONSTRUCTION OF NEW RENOVATED AREAS IS COMPLETED, THE CONTRACTOR SHALL LABEL REUSED AND EXISTING UNUSED CIRCUIT BREAKERS IN ALL ELECTRICAL PANELS INVOLVED. SPARES SHALL BE MARKED 'SPARE' AND PLACED IN THE 'OFF' POSITION.
11. IT IS CALLED TO THE CONTRACTOR'S ATTENTION THAT THE ENTIRE INSTALLATION MUST BE GROUNDED IN COMPLIANCE WITH THE NATIONAL ELECTRICAL CODE. ALL DEVICES, EQUIPMENT BOXES, ETC. MUST BE CONNECTED TO A SOLID, INSULATED GREEN, COPPER GROUNDING CONDUCTOR. THIS GROUNDING CONDUCTOR MUST BE CONTINUOUS WITHOUT SPLICES FROM POINT OF ORIGIN IN PANELBOARD TO ALL BOXES AND EQUIPMENT ON EACH BRANCH CIRCUIT. VERIFY GROUNDING VALUES AND SUBMIT A TYPEWRITTEN REPORT TO THE RESIDENT ENGINEER INDICATING TESTING RESULTS OF EACH CIRCUIT AT THE COMPLETION OF THE PROJECT.
12. FURNISH, INSTALL, AND PERFORM ANY AND ALL NECESSARY WORK AND EQUIPMENT ON A TEMPORARY BASIS TO ASSURE UNINTERRUPTED SERVICE TO THE ELECTRICAL, FIRE ALARM, TELEPHONE AND SIGNAL/DATA SYSTEMS UNTIL NEW EQUIPMENT CAN BE INSTALLED ON A PERMANENT BASIS FOR THESE SYSTEMS. ALL OUTAGES MUST BE SCHEDULED WITH THE RESIDENT ENGINEER PRIOR TO ANY INTERRUPTIONS OF THESE SYSTEMS.
13. FOR SINGLE PHASE CIRCUITS, UNLESS NOTED OTHERWISE, NEW WIRING INDICATED SHALL BE 2 #12 AND 1 #12 GROUND IN 3/4" CONDUIT. FOR THREE PHASE CIRCUITS, UNLESS NOTED OTHERWISE, NEW WIRING INDICATED SHALL BE 3 #12 AND 1 #12 GROUND IN 3/4" CONDUIT. FOR CIRCUITS THAT REQUIRE LONG TRAVEL DISTANCE, REFER TO VOLTAGE DROP NOTE BELOW.
14. THE CONTRACTOR SHALL FIRESTOP ALL EXISTING CONCEALED AND ACCESSIBLE CONDUITS WITHIN THE LIMITS OF THE CONTRACT WORK AREA. THE CONTRACTOR SHALL FIRESTOP ALL NEW AND EXISTING CONDUITS AS PART OF THE REMODELING AND EXISTING SYSTEMS TO REMAIN. (REFER TO SPECIFICATIONS)
15. THE CONTRACTOR SHALL PROVIDE AND INSTALL APPROVED FIRE STOPPING AT ALL NEW AND EXISTING FLOOR SLAB/CEILING AND WALL PENETRATIONS WITHIN THE LIMITS OF CONTRACT WORK AREA TO MAINTAIN THE FIRE RATED CONSTRUCTION.
16. COORDINATE ALL PHASING, DEMOLITION AND NEW WORK WITH VA PROJECT ENGINEER.

VOLTAGE DROP NOTE:

THE FOLLOWING LIST APPLIES TO ALL NEW BRANCH WIRING PROVIDED UNDER THIS CONTRACT. LISTS INDICATED THE NECESSARY GAUGE OF CONDUCTORS NECESSARY FOR BRANCH CIRCUITS ONE WAY FROM PANEL TO LAST OUTLET OR LIGHTING FIXTURE ON THE CIRCUIT.

120/208V CIRCUITS	WIRE SIZE	277V CIRCUITS
• 0 - 100 FEET	No. 12 AWG	0 - 150 FEET
• 101 - 250 FEET	No. 10 AWG	151 - 350 FEET
• 250 - 400 FEET	No. 8 AWG	351 - 500 FEET

FULLY SPRINKLERED
ISSUED FOR BID

Revisions | Date

CONSULTANTS:

MEP AND STRUCTURAL ENGINEER

H.F. LENZ COMPANY
1407 Scalp Avenue
Johnstown, PA 15904
Tel (814) 269-9300
www.hflenz.com

KEY PLAN:

COMMONWEALTH OF PENNSYLVANIA — REGISTERED PROFESSIONAL — TIMOTHY M. EARHART — ENGINEER — No. PE-041237-E

ARCHITECT:

ARCHITECT
Vision Design Group
2200 Dunbarton Drive Suite F
Chesapeake, VA 23325
Tel (757)-477-8600

ENVIRONMENTAL CONSULTANT
Earth Smart Environmental Solutions, LLC
232 S. Dillard Street, Suite 230
Winter Garden, FL 34787-3516

Project Number	Scale
	As indicated

Drawing Title: ELECTRICAL SYMBOLS, ABBREVIATIONS, AND NOTES

Approved: Project Director

Project Title: REPLACEMENT OF AC-27

Location: 3900 WOODLAND AVENUE PHILADELPHIA, PA 19104

Date	Checked	Drawn
10/26/12	TME	RJD

VA Project Number: 642-11-160
Building Number: 2
Drawing Number: ES-AC27-001
Dwg. 18 of 24

Office of Facilities Management
Department of Veterans Affairs

VA FORM 08-6231, OCT 1978

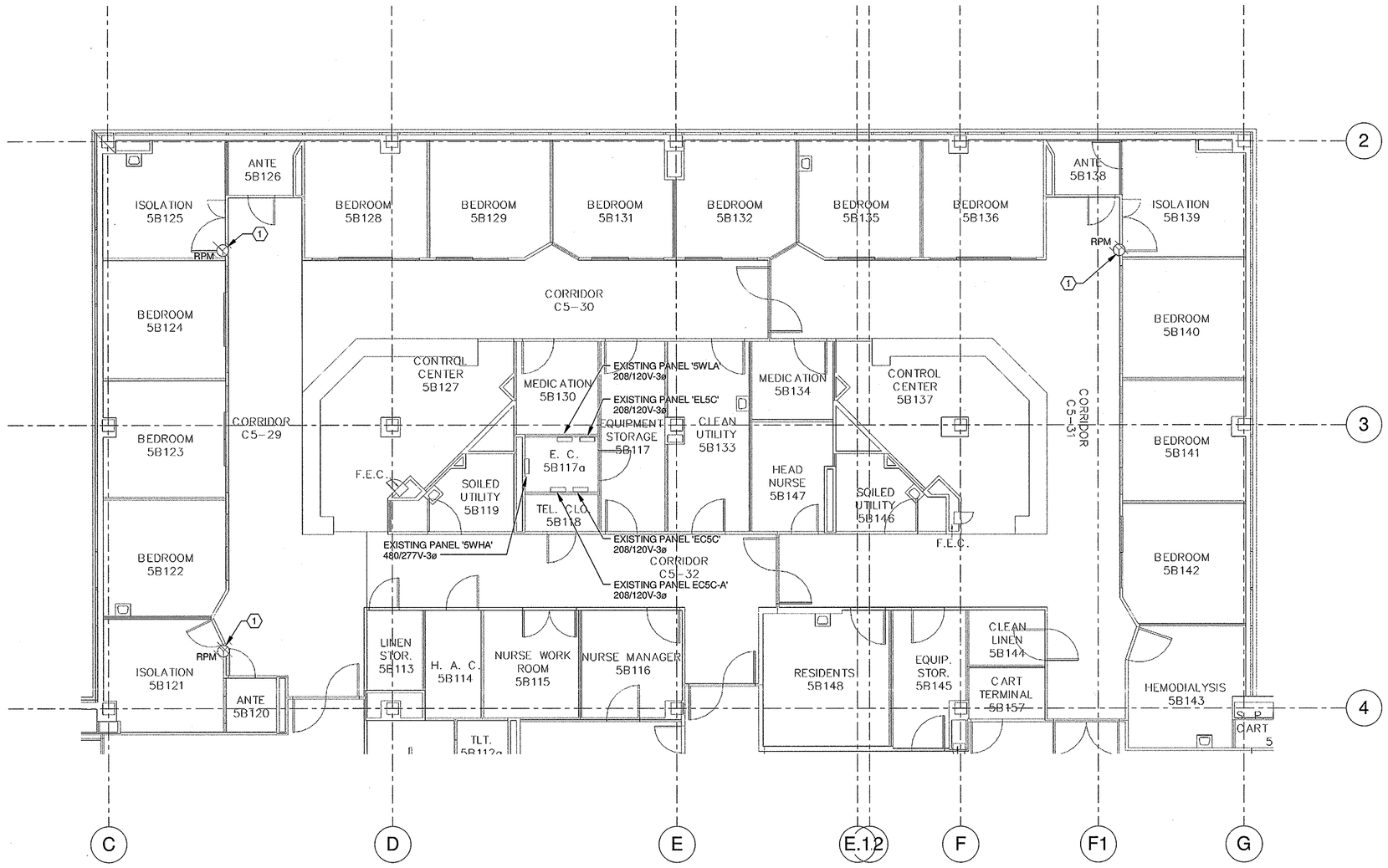

1 PARTIAL FIFTH FLOOR PLAN - ELECTRICAL DEMOLITION
SCALE: 1/8" = 1'-0"

⬡ - ELECTRICAL KEYNOTES

1 DISCONNECT EXISTING BRANCH CONDCUTORS FROM ROOM PRESSURE MONITOR. EXISTING CONDUCTORS TO REMAIN FOR RECONNECTION TO NEW ROOM PRESSURE MONITOR.

FULLY SPRINKLERED
ISSUED FOR BID

Revisions	Date

CONSULTANTS:

MEP AND STRUCTURAL ENGINEER
H.F. LENZ COMPANY
1407 Scalp Avenue
Johnstown, PA 15904
Tel (814) 269-6000
www.hflenz.com

KEY PLAN:

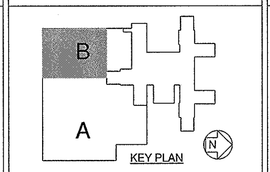

KEY PLAN

COMMONWEALTH OF PENNSYLVANIA
REGISTERED PROFESSIONAL ENGINEER
TIMOTHY M. EARHART
No. PE-041227-E

ARCHITECT:

ARCHITECT
Vision Design Group
2200 Dunbarton Drive Suite F
Chesapeake, VA 23325
Tel (757) 477-8600

ENVIRONMENTAL CONSULTANT
Earth Smart Environmental Solutions, LLC
232 S. Dillard Street, Suite 230
Winter Garden, FL 34787-3516

Project Number	Scale
	As indicated

Drawing Title: PARTIAL FIFTH FLOOR PLAN - ELECTRICAL DEMOLITION

Approved: Project Director

Project Title: REPLACEMENT OF AC-27

Location: 3900 WOODLAND AVENUE PHILADELPHIA, PA 19104

Date	Checked	Drawn
10/26/12	TME	RJD

VA Project Number: 642-11-160

Building Number: 2

Drawing Number: ES-AC27-101

Dwg. 19 of 24

Office of Facilities Management

Department of Veterans Affairs

VA FORM 08-6231, OCT 1978

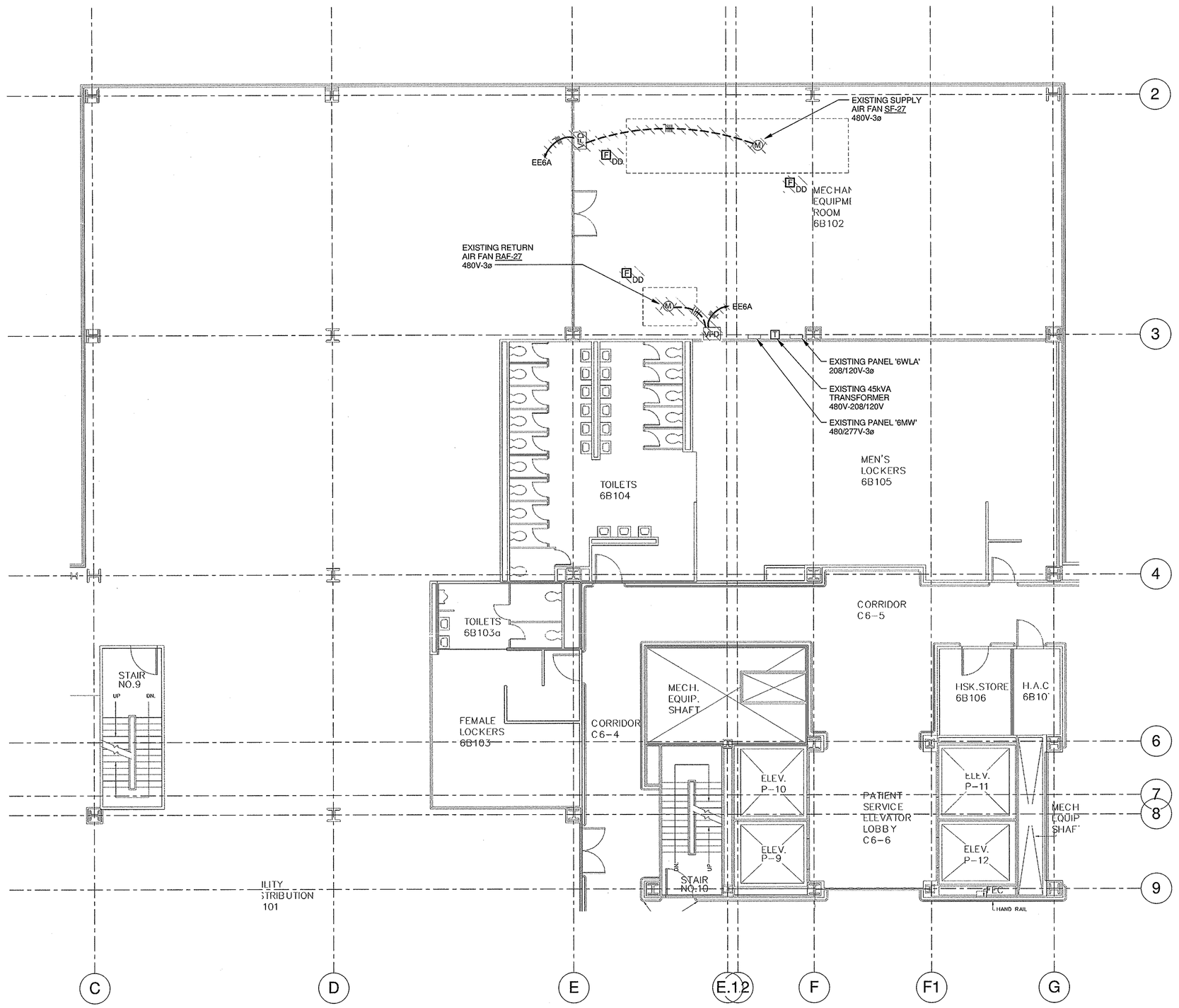

1 PARTIAL SIXTH FLOOR PLAN - ELECTRICAL DEMOLITION
SCALE: 1/8" = 1'-0"

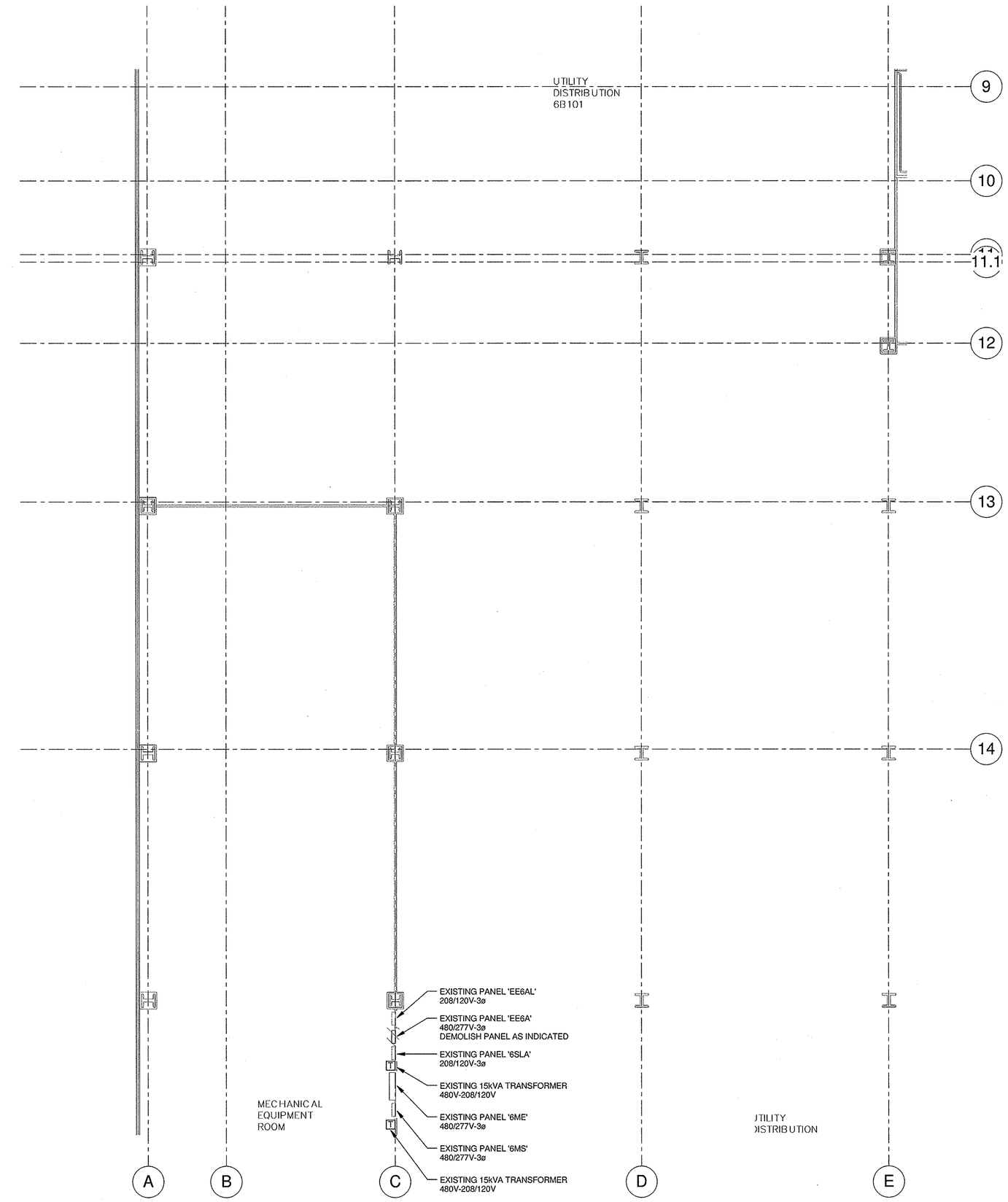

2 PARTIAL SIXTH FLOOR PLAN - ELECTRICAL DEMOLITION
SCALE: 1/8" = 1'-0"

FULLY SPRINKLERED
ISSUED FOR BID

Revisions	Date

CONSULTANTS:

MEP AND STRUCTURAL ENGINEER

H.F. LENZ COMPANY
1407 Scalp Avenue
Johnstown, PA 15904
Tel (814) 269-9300
www.hflenz.com

KEY PLAN:

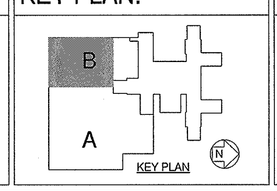

COMMONWEALTH OF PENNSYLVANIA
REGISTERED PROFESSIONAL
TIMOTHY M. EARHART
ENGINEER
No. PE-041237-E

ARCHITECT:

ARCHITECT
Vision Design Group
2200 Dunbarton Drive Suite F
Chesapeake, VA 23325
Tel (757) 477-8600

ENVIRONMENTAL CONSULTANT
Earth Smart Environmental Solutions, LLC
232 S. Dillard Street, Suite 230
Winter Garden, FL 34787-3516

Project Number	Scale
	As indicated

Drawing Title: PARTIAL SIXTH FLOOR PLANS - ELECTRICAL DEMOLITION

Approved: Project Director

Project Title: REPLACEMENT OF AC-27

Location: 3900 WOODLAND AVENUE PHILADELPHIA, PA 19104

Date	Checked	Drawn
10/26/12	TME	RJD

VA Project Number: 642-11-160

Building Number: 2

Drawing Number: ES-AC27-102

Dwg. 20 of 24

Office of Facilities Management

Department of Veterans Affairs

VA FORM 08-6231, OCT 1978

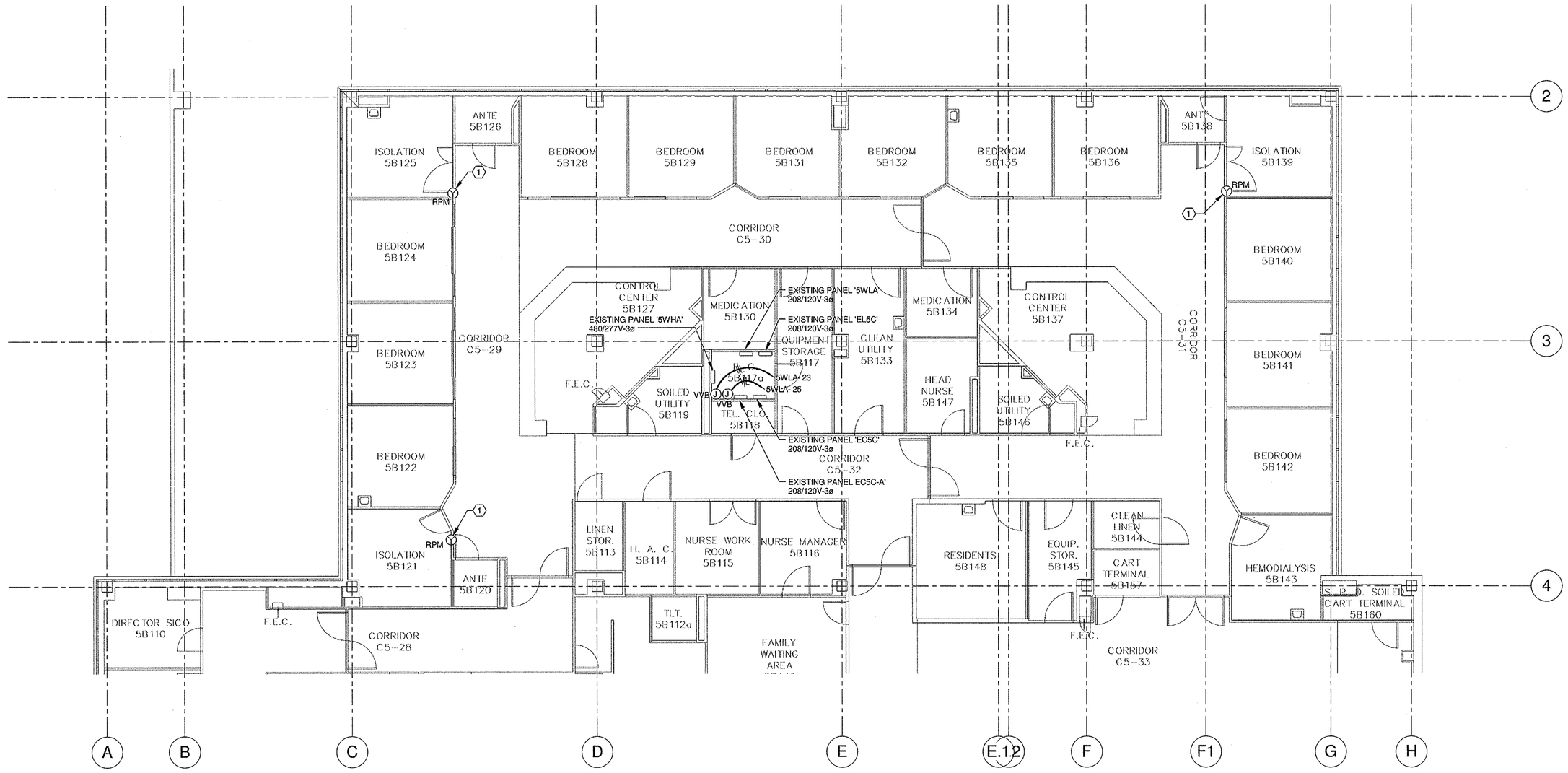

1 PARTIAL FIFTH FLOOR PLAN - ELECTRICAL POWER
SCALE: 1/8" = 1'-0"

⬡ - ELECTRICAL KEYNOTES

1 RE-CONNECT EXISTING CONDUCTORS TO NEW ROOM PRESSURE MONITOR.

FULLY SPRINKLERED
ISSUED FOR BID

Revisions	Date

CONSULTANTS:

MEP AND STRUCTURAL ENGINEER
H.F. LENZ COMPANY
1407 Scalp Avenue
Johnstown, PA 15904
Tel (814) 269-9300
www.hflenz.com

KEY PLAN:

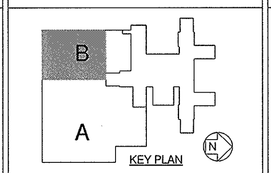

REGISTERED PROFESSIONAL ENGINEER TIMOTHY M. EARHART PE-041371-E COMMONWEALTH OF PENNSYLVANIA

ARCHITECT:

ARCHITECT
Vision Design Group
2200 Dunbarton Drive Suite F
Chesapeake, VA 23325
Tel (757) 477-8600

ENVIRONMENTAL CONSULTANT
Earth Smart Environmental Solutions, LLC
232 S. Dillard Street, Suite 230
Winter Garden, FL 34787-3516

Project Number	Scale
	As indicated

Drawing Title: PARTIAL FIFTH FLOOR PLAN - ELECTRICAL POWER

Approved: Project Director

Project Title: REPLACEMENT OF AC-27

Location: 3900 WOODLAND AVENUE PHILADELPHIA, PA 19104

Date	Checked	Drawn
10/26/12	TME	RJD

VA Project Number: 642-11-160

Building Number: 2

Drawing Number: ES-AC27-201

Dwg. 21 of 24

Office of Facilities Management

Department of Veterans Affairs

VA FORM 08-6231, OCT 1978

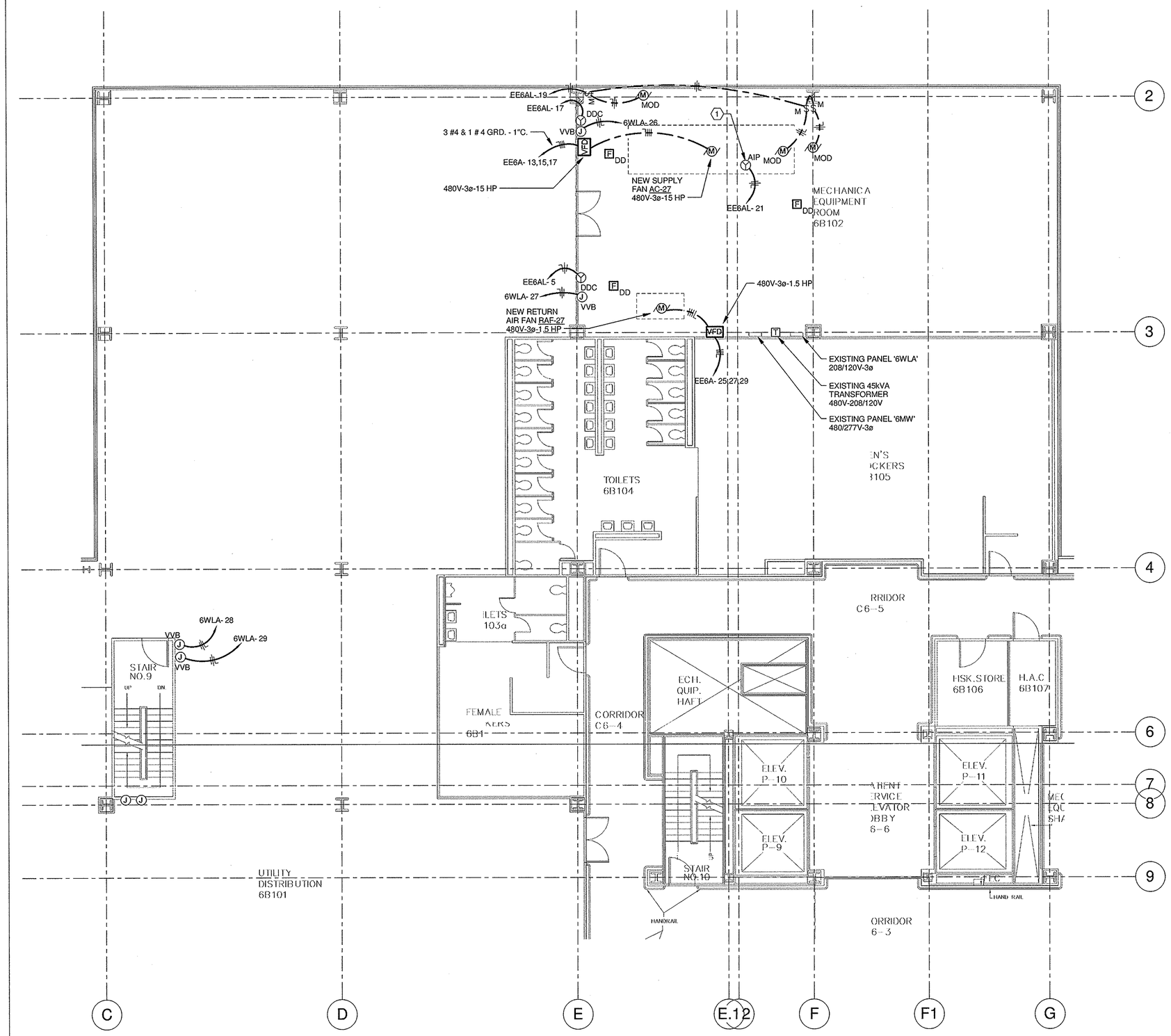

1 PARTIAL SIXTH FLOOR PLAN - ELECTRICAL POWER
SCALE: 1/8" = 1'-0"

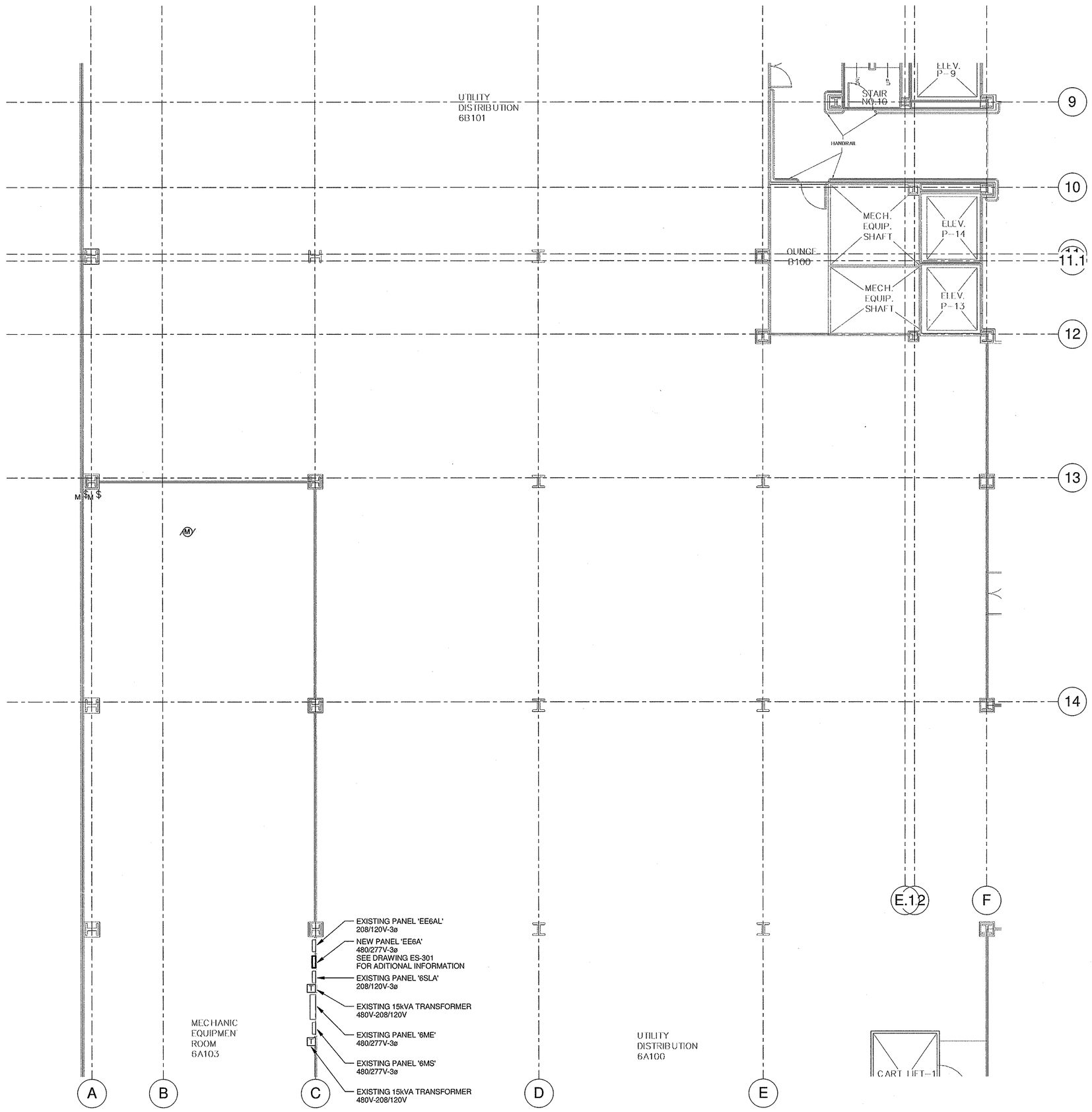

2 PARTIAL SIXTH FLOOR PLAN - ELECTRICAL POWER
SCALE: 1/8" = 1'-0"

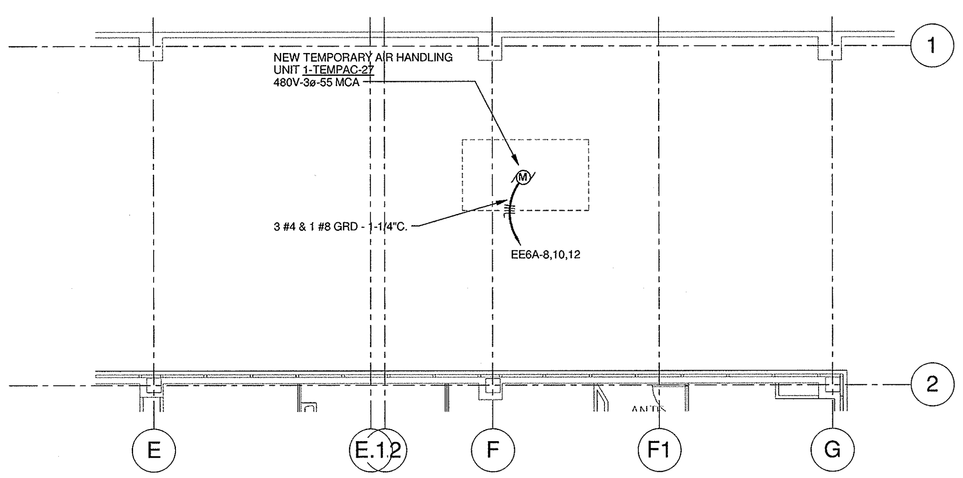

3 PARTIAL FOURTH FLOOR ROOF PLAN - ELECTRICAL POWER
SCALE: 1/8" = 1'-0"

GENERAL NOTES THIS DRAWING:

1. LOCATIONS SHOWN FOR BRANCH CIRCUIT POWERING VARIABLE VOUME BOX EQUIPMENT ARE SHOWN FOR DIAGRAMMATICAL PURPOSES ONLY. CONTROLS CONTRACTOR SHALL PROVIDE DIRECTION ON FINAL LOCATION OF CIRCUITS.

- ELECTRICAL KEYNOTES

1 EC SHALL PROVIDE ALL CONDUIT AND CONDUCTORS INTERNAL TO AIR HANDLING UNIT FOR INDICATED BRANCH CIRCUIT.

FULLY SPRINKLERED
ISSUED FOR BID

Revisions	Date

CONSULTANTS:

MEP AND STRUCTURAL ENGINEER
H.F. LENZ COMPANY
1407 Scalp Avenue
Johnstown, PA 15904
Tel (814) 269-6300
www.hflenz.com

KEY PLAN:

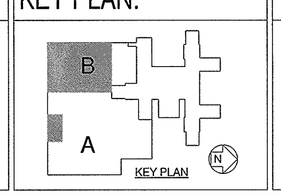

COMMONWEALTH OF PENNSYLVANIA
REGISTERED PROFESSIONAL ENGINEER
TIMOTHY M. EARHART
No. PE-041237-E

ARCHITECT:

ARCHITECT
Vision Design Group
2200 Dunbarton Drive Suite F
Chesapeake, VA 23325
Tel (757) 477-8600

ENVIRONMENTAL CONSULTANT
Earth Smart Environmental Solutions, LLC
232 S. Dillard Street, Suite 230
Winter Garden, FL 34787-3516

Project Number	Scale
	As indicated

Drawing Title: PARTIAL FOURTH AND SIXTH FLOOR PLANS - ELECTRICAL POWER

Approved: Project Director

Project Title: REPLACEMENT OF AC-27

Location: 3900 WOODLAND AVENUE PHILADELPHIA, PA 19104

Date: 10/26/12 | Checked: TME | Drawn: RJD

VA Project Number: 642-11-160

Building Number: 2

Drawing Number: ES-AC27-202

Dwg. 22 of 24

Office of Facilities Management

Department of Veterans Affairs

VA FORM 08-6231, OCT 1978

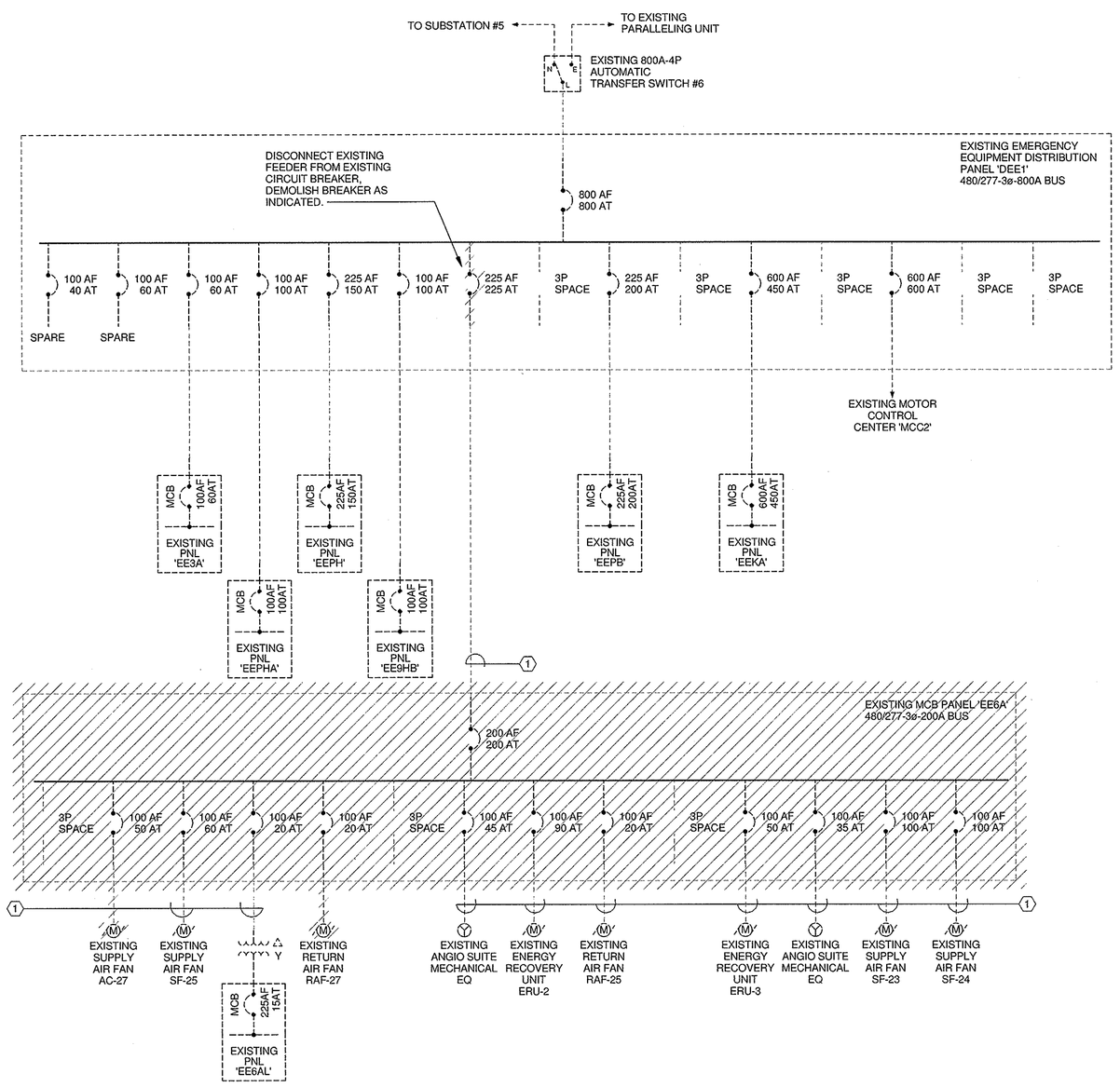

1 ELECTRICAL SINGLE LINE DIAGRAM - AC-27 - DEMOLITION
SCALE: 1/8" = 1'-0"

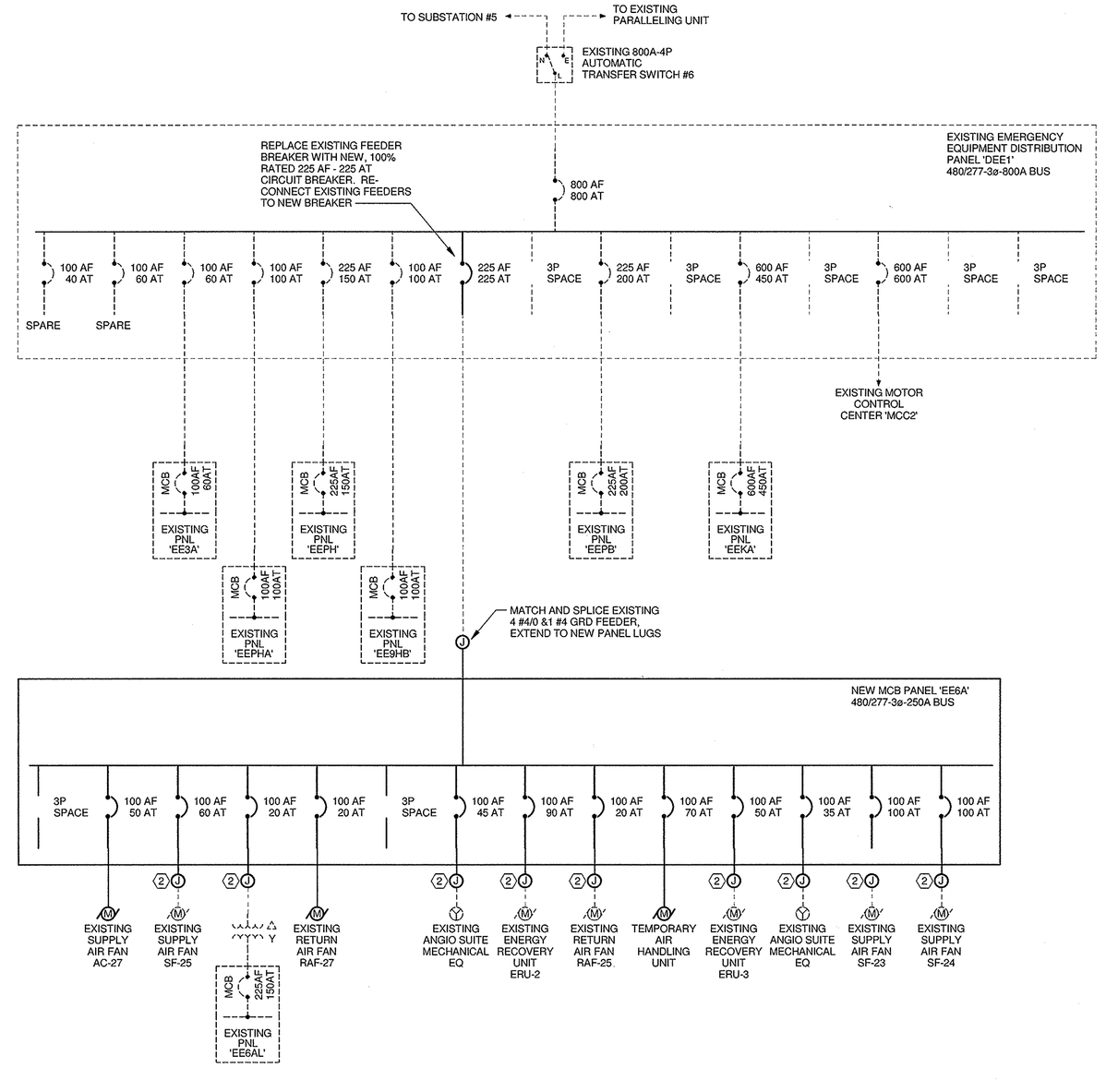

2 ELECTRICAL SINGLE LINE DIAGRAM - AC-27 - NEW WORK
SCALE: 1/8" = 1'-0"

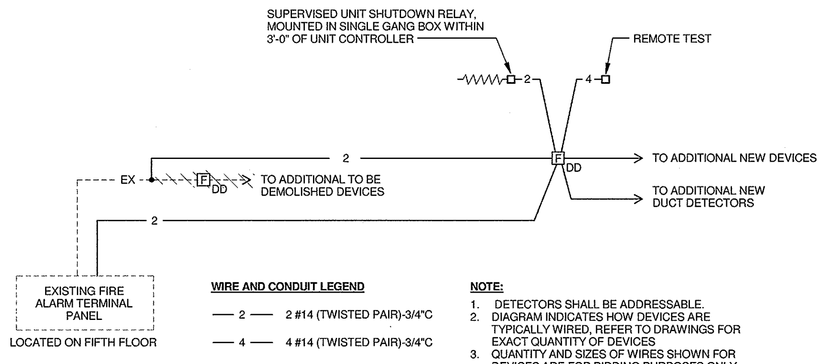

WIRE AND CONDUIT LEGEND

- 2 — 2 #14 (TWISTED PAIR)-3/4"C
- 4 — 4 #14 (TWISTED PAIR)-3/4"C
- EX — EXISTING WIRING
- END OF LINE RESISTOR

NOTE:

1. DETECTORS SHALL BE ADDRESSABLE.
2. DIAGRAM INDICATES HOW DEVICES ARE TYPICALLY WIRED, REFER TO DRAWINGS FOR EXACT QUANTITY OF DEVICES.
3. QUANTITY AND SIZES OF WIRES SHOWN FOR DEVICES ARE FOR BIDDING PURPOSES ONLY, CONFIRM WITH MANUFACTURER ON EXACT TYPE AND QUANTITY OF WIRES REQUIRED.
4. FINAL LOCATION OF REMOTE TEST AND SHUTDOWN RELAY SHALL BE COORDINATED IN FIELD. REMOTE TEST AND RELAY SHALL BE PROVIDED IN ROOM WHERE DUCT DETECTORS ARE INSTALLED.

3 PARTIAL FIRE ALARM SINGLE LINE DIAGRAM
NOT TO SCALE

⬡ - ELECTRICAL KEYNOTES

1. EC SHALL PROVIDE JUNCTION BOXES/WIREWAY, AS REQUIRED, TO CONTAIN EXISTING CONDUCTORS.
2. MATCH, SPLICE , AND EXTEND CONDUCTORS , AS REQUIRED, IN JUNCTION BOX/WIREWAY PROVIDED DURING DEMOLITION.

GENERAL NOTES THIS DRAWING:

1. CONTRACTOR SHALL COORDINATE WORK SHOWN ON THIS DRAWING WITH VA PROJECT ENGINEER. IF EXISTING SUPPLY FAN AC-27 AND RETURN FAN RAF-27 ARE TO BE REPLACED BEFORE EXISTING SUPPLY FAN AC-25 AND RETURN FAN RAF-25, WORK SHOWN ON SINGLE LINE DIAGRAM ON THIS DRAWING SHALL BE COMPLETED BEFORE ANY WORK ON AC-27 AND RAF-27 IS TO BEGIN. IF AC-27 AND RAF-27 ARE NOT REPLACED FIRST, WORK SHOWN ON SINGLE LINE DIAGRAM ON THIS DRAWING SHALL BE CONSIDERED TO HAVE ALREADY BEEN COMPLETED.

FULLY SPRINKLERED
ISSUED FOR BID

Revisions	Date

CONSULTANTS:

MEP AND STRUCTURAL ENGINEER
H.F. LENZ COMPANY
1407 Scalp Avenue
Johnstown, PA 15904
Tel (814) 269-6300
www.hflenz.com

KEY PLAN:

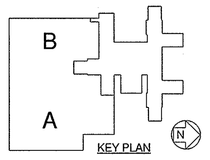

COMMONWEALTH OF PENNSYLVANIA
REGISTERED PROFESSIONAL
TIMOTHY M. EARHART
ENGINEER No. VE 041237-E

ARCHITECT:

ARCHITECT
VDG
Vision Design Group
2200 Dunbarton Drive Suite F
Chesapeake, VA 23325
Tel (757) 477-6600

ENVIRONMENTAL CONSULTANT
Earth Smart Environmental Solutions, LLC
232 S. Dillard Street, Suite 230
Winter Garden, FL 34787-3516

Project Number	Scale
	As indicated

Drawing Title: ELECTRICAL SINGLE LINE DIAGRAMS	Project Title: REPLACEMENT OF AC-27	VA Project Number: 642-11-160	Office of Facilities Management
		Building Number: 2	
Approved: Project Director	Location: 3900 WOODLAND AVENUE PHILADELPHIA, PA 19104	Drawing Number: ES-AC27-301	Department of Veterans Affairs
	Date: 10/26/12 · Checked: TME · Drawn: RJD	Dwg. 23 of 24	

VA FORM 08-6231, OCT 1978

Branch Panel: 5WLA

Location: FIFTH FLOOR
Supply From: 5WHA
Mounting: Surface
Enclosure: Type 1

Volts: 120/208 Wye
Phases: 3
Wires: 4

A.I.C. Rating: EXISTING
Mains Type: MCB
Mains Rating: 100 A
MCB Rating: 100 A

Notes: EXISTING PANEL IS MANUFACTURED BY SQUARE D

	CKT	Circuit Description	Trip	Poles	A		B		C		Poles	Trip	Circuit Description	CKT
	1	ACTIVE	20 A	1	1000	1000					1	20 A	ACTIVE	2
	3	ACTIVE	20 A	1			1000	1000			1	20 A	ACTIVE	4
	5	ACTIVE	20 A	1					1000	1000	1	20 A	ACTIVE	6
	7	ACTIVE	20 A	1	1000	1000					1	20 A	ACTIVE	8
	9	ACTIVE	20 A	1			1000	1000			1	20 A	ACTIVE	10
	11	ACTIVE	20 A	1					1000	1000	1	20 A	ACTIVE	12
	13	ACTIVE	20 A	1	1000	1000					1	20 A	ACTIVE	14
	15	ACTIVE	20 A	1			1000	1000			1	20 A	ACTIVE	16
	17	ACTIVE	20 A	1					1000	1000	1	20 A	ACTIVE	18
	19	ACTIVE	20 A	1	1000	1000					1	20 A	ACTIVE	20
	21	ACTIVE	20 A	1			1000	1000			1	20 A	ACTIVE	22
#	23	JUNCTION BOX FOR VARIABLE VOLUME	20 A	1					1200	1000	1	20 A	ACTIVE	24
#	25	JUNCTION BOX FOR VARIABLE VOLUME	20 A	1	1200	1000					3	20 A	ACTIVE	26
	27	SPARE	20 A	1		0 VA	1000				--	--	--	28
	29	SPARE	20 A	1					0 VA	1000	--	--	--	30
					Total Load:	10200 VA	9000 VA		9200 VA					
					Total Amps:	85 A	75 A		77 A					

Legend:

Load Classification	Connected Load	Demand Factor	Estimated Demand	Panel Totals	
Motor	1200 VA	70.00%	840 VA		
Power	1200 VA	100.00%	1200 VA	**Total Conn. Load:**	28400 VA
Spare	26000 VA	70.00%	18200 VA	**Total Est. Demand:**	20240 VA
				Total Conn.:	79 A
				Total Est. Demand:	56 A

Notes:

Branch Panel: 6WLA

Location: FIFTH FLOOR
Supply From: 6WHA
Mounting: Surface
Enclosure: Type 1

Volts: 120/208 Wye
Phases: 3
Wires: 4

A.I.C. Rating: EXISTING
Mains Type: MCB
Mains Rating: 125 A
MCB Rating: 125 A

Notes: EXISTING PANEL IS MANUFACTURED BY SQUARE D

	CKT	Circuit Description	Trip	Poles	A		B		C		Poles	Trip	Circuit Description	CKT	
	1	ACTIVE	20 A	1	1000	1000					1	20 A	ACTIVE	2	
	3	ACTIVE	20 A	1			1000	1000			1	20 A	ACTIVE	4	
	5	ACTIVE	20 A	1					1000	1000	1	20 A	ACTIVE	6	
	7	ACTIVE	20 A	1	1000	1000					1	20 A	ACTIVE	8	
	9	ACTIVE	20 A	1			1000	1000			1	20 A	ACTIVE	10	
	11	ACTIVE	20 A	1					1000	1000	1	20 A	ACTIVE	12	
	13	ACTIVE	20 A	1	1000	1000					1	20 A	ACTIVE	14	
	15	ACTIVE	20 A	1			1000	1000			1	20 A	ACTIVE	16	
	17	ACTIVE	20 A	1					1000	1000	1	20 A	ACTIVE	18	
	19	ACTIVE	20 A	1	1000	1000					1	20 A	ACTIVE	20	
	21	ACTIVE	20 A	1			1000	1000			1	20 A	ACTIVE	22	
	23	ACTIVE	20 A	1					1000	1000	1	20 A	ACTIVE	24	
	25	ACTIVE	20 A	1	1000	1200					1	20 A	JUNCTION BOX FOR VARIABLE VOLUME	26	#
#	27	JUNCTION BOX FOR VARIABLE VOLUME	20 A	1			1200	1200			1	20 A	JUNCTION BOX FOR VARIABLE VOLUME	28	#
#	29	JUNCTION BOX FOR VARIABLE VOLUME	20 A	1					1200	0 VA	1	20 A	SPARE	30	
	31	SPARE	20 A	1	0 VA	1000					1	20 A	ACTIVE	32	
	33	SPARE	20 A	1			0 VA	0 VA			1	20 A	SPARE	34	
	35	SPARE	20 A	1					0 VA	0 VA	1	20 A	SPARE	36	
	37	SPARE	20 A	1	0 VA	0 VA					1	20 A	SPARE	38	
	39	SPARE	20 A	1			0 VA	0 VA			1	20 A	SPARE	40	
	41	SPARE	20 A	1					0 VA	0 VA	1	20 A	SPARE	42	
					Total Load:	11200 VA	10400 VA		9200 VA						
					Total Amps:	95 A	86 A		77 A						

Legend:

Load Classification	Connected Load	Demand Factor	Estimated Demand	Panel Totals	
Motor	1200 VA	70.00%	840 VA		
Power	3600 VA	100.00%	3600 VA	**Total Conn. Load:**	30800 VA
Spare	26000 VA	70.00%	18200 VA	**Total Est. Demand:**	22640 VA
				Total Conn.:	85 A
				Total Est. Demand:	63 A

Notes:

Branch Panel: EE6A

Location: SIXTH FLOOR
Supply From: DEE1
Mounting: Surface
Enclosure: Type 1

Volts: 480/277 Wye
Phases: 3
Wires: 4

A.I.C. Rating: 35,000
Mains Type: MLO
Mains Rating: N/A
MCB Rating: N/A

Notes: NEW PANEL

	CKT	Circuit Description	Trip	Poles	A		B		C		Poles	Trip	Circuit Description	CKT	
$	1	NEW RETURN AIR FAN - RAF-25	20 A	3	2104	7474					3	90 A	EXISTING ENERGY RECOVERY UNIT - ERU-2	2	
$	3	--	--	--			2104	7474			--	--	--	4	
$	5	--	--	--					2104	7474	--	--	--	6	
$	7	NEW SUPPLY AIR FAN - AC-25	60 A	3	7473	12179					3	70 A	TEMPORARY AIR HANDLING UNIT	8	@
$	9	--	--	--			7473	12179			--	--	--	10	@
$	11	--	--	--					7473	12179	--	--	--	12	@
@	13	NEW SUPPLY AIR FAN - AC-27	50 A	3	5813	0 VA					--	--	SPACE	14	
@	15	--	--	--			5813	0 VA			--	--	SPACE	16	
@	17	--	--	--					5813	0 VA	--	--	SPACE	18	
	19	EXISTING PANEL 'EE6AL' VIA TRANSFORMER	20 A	3	5000	5813					3	50 A	EXISTING ENERGY RECOVERY UNIT - ERU-3	20	
	21	--	--	--			5000	5813			--	--	--	22	
	23	--	--	--					5000	5813	--	--	--	24	
@	25	NEW RETURN AIR FAN - RAF-27	20 A	3	830 VA	4844					3	35 A	EXISTING ANGIO SUITE MECHANICAL EQ	26	
@	27	--	--	--			830 VA	4844			--	--	--	28	
@	29	--	--	--					830 VA	4844	--	--	--	30	
	31	SPACE	--	--	0 VA	10000					3	100 A	EXISTING SUPPLY FAN - SF-23	32	
	33	SPACE	--	--			0 VA	10000			--	--	--	34	
	35	SPACE	--	--					0 VA	10000	--	--	--	36	
	37	EXISTING ANGIO SUITE MECHANICAL EQ	45 A	3	6200	14393					3	100 A	EXISTING SUPPLY FAN - SF-24	38	
	39	--	--	--			6200	14393			--	--	--	40	
	41	--	--	--					6200	14393	--	--	--	42	
					Total Load:		82123 VA		82123 VA						
					Total Amps:		296 A		296 A						

Legend:

Load Classification	Connected Load	Demand Factor	Estimated Demand	Panel Totals	
Motor	85198 VA	70.00%	59639 VA		
Spare	161172 VA	70.00%	112820 VA	**Total Conn. Load:**	246370 VA
				Total Est. Demand:	172459 VA
				Total Conn.:	296 A
				Total Est. Demand:	207 A

Notes:

Branch Panel: EE6AL

Location: FIFTH FLOOR
Supply From: EE6A
Mounting: Surface
Enclosure: Type 1

Volts: 120/208 Wye
Phases: 3
Wires: 4

A.I.C. Rating: EXISTING
Mains Type: MCB
Mains Rating: 60 A
MCB Rating: 60 A

Notes: EXISTING PANEL IS MANUFACTURED BY EATON, MODEL TYPE 'PRL1A'

	CKT	Circuit Description	Trip	Poles	A		B		C		Poles	Trip	Circuit Description	CKT	
	1	EXISTING CONTROL PANEL	20 A	1	500 VA	1000					1	20 A	EXISTING LIGHTS AND RECEPS - AC-23	2	
	3	EXISTING CONTROL PANEL	20 A	1			500 VA	1000			1	20 A	EXISTING LIGHTS AND RECEPS - AC-24	4	
	5	NEW DDC PANEL - RAF-27	20 A	1					1000	1000	1	20 A	NEW DDC PANEL - AC-25	6	$
$	7	NEW MOTOR OPERATED DAMPERS - AC-25	20 A	1	750 VA	500 VA					3	15 A	EXISTING GLYCOL PUMP - AC-24	8	
	9	SPACE	--	--			0 VA	500 VA			--	--	--	10	
	11	SPACE	--	--					0 VA	500 VA	--	--	--	12	
	13	SPACE	--	--	0 VA	500 VA					3	15 A	EXISTING GLYCOL PUMP - AC-24	14	
	15	SPACE	--	--			0 VA	500 VA			--	--	--	16	
#	17	NEW DDC PANEL - AC-27	20 A	1					1000	500 VA	--	--	--	18	
#	19	NEW MOTOR OPERATED DAMPERS - AC-27	20 A	1	750 VA	1200					1	20 A	AC-25 INTERNAL LIGHTS AND RECEPTACLES	20	$
#	21	AC-27 INTERNAL LIGHTS AND RECEPTACLES	20 A	1			1200	0 VA			--	--	SPACE	22	
	23	SPACE	--	--					0 VA	0 VA	--	--	SPACE	24	
	25	SPACE	--	--	0 VA	0 VA					--	--	SPACE	26	
	27	SPACE	--	--			0 VA	0 VA			--	--	SPACE	28	
	29	SPACE	--	--					0 VA	0 VA	--	--	SPACE	30	
					Total Load:		5200 VA		3700 VA		4000 VA				
					Total Amps:		44 A		31 A		34 A				

Legend:

Load Classification	Connected Load	Demand Factor	Estimated Demand	Panel Totals	
Lighting	1200 VA	125.00%	1500 VA		
Motor	2700 VA	70.00%	1890 VA	**Total Conn. Load:**	12900 VA
Other	0 VA	0.00%	0 VA	**Total Est. Demand:**	10590 VA
Power	3000 VA	100.00%	3000 VA	**Total Conn.:**	36 A
Spare	6000 VA	70.00%	4200 VA	**Total Est. Demand:**	29 A

Notes:

PANEL SCHEDULE NOTATION LEGEND

- # - INDICATES TERMINATION OF BRANCH CONDUCTORS ON EXISTING SPARE BREAKER.
- & - INDICATES TERMINATION OF BRANCH CONDUCTORS ON NEW CIRCUIT BREAKER PROVIDED IN EXISTING SPARE SPACE.
- $ - INDICATES CIRCUIT BREAKER AND BRANCH CIRCUIT PROVIDED UNDER SEPRATE CONTRACT.
- @ - INDICATES TERMINATION OF BRANCH CONDUCTORS ON NEW CIRCUIT BREAKER PROVIDED IN SPARE SPACE CREATED BY REMOVAL OF EXISTING CIRCUIT BREAKER(S).

FULLY SPRINKLERED
ISSUED FOR BID

Revisions | Date

VA FORM 08-6231, OCT 1978

CONSULTANTS:

MEP AND STRUCTURAL ENGINEER

H.F. LENZ COMPANY
1407 Scalp Avenue
Johnstown, PA 15904
Tel (814) 269-6300
www.hflenz.com

KEY PLAN:

COMMONWEALTH OF PENNSYLVANIA
REGISTERED PROFESSIONAL ENGINEER
TIMOTHY M. EARHART
No. PE-041237-E

ARCHITECT:

ARCHITECT
Vision Design Group
2200 Dunbarton Drive Suite F
Chesapeake, VA 23325
Tel (757) 477-8600

ENVIRONMENTAL CONSULTANT
Earth Smart Environmental LLC
232 S. Dillard Street, Suite 230
Winter Garden, FL 34787-3516

Project Number	Scale
	As indicated

Drawing Title: ELECTRICAL PANEL SCHEDULES

Approved: Project Director

Project Title: REPLACEMENT OF AC-27

Location: 3900 WOODLAND AVENUE PHILADELPHIA, PA 19104

Date: 10/26/12 | Checked: Checker | Drawn: Author

VA Project Number

Building Number: 2

Drawing Number: ES-AC27-401

Dwg. 24 of 24

Office of Facilities Management

Department of Veterans Affairs