GENERAL NOTES
S0S9N001-1

1. INTERPRETATION OF DRAWINGS & SPECIFICATIONS
   A. WHERE SPECIFICATIONS HAVE BEEN PREPARED FOR THIS PROJECT, THEY ARE ARRANGED IN SEVERAL SECTIONS, BUT SUCH SEPARATION SHALL NOT BE CONSIDERED AS THE LIMITS OF THE WORK REQUIRED OF ANY SEPARATE TRADE. THE TERMS AND CONDITIONS OF SUCH LIMITATIONS ARE WHOLLY BETWEEN THE CONTRACTOR AND HIS SUBCONTRACTORS.
   B. IN GENERAL, THE WORKING DETAILS WILL INDICATE DIMENSIONS, POSITION AND KIND OF CONSTRUCTION, AND THE SPECIFICATIONS, QUALITIES AND METHODS. ANY WORK INDICATED ON THE WORKING DETAILS AND NOT MENTIONED IN THE SPECIFICATIONS, OR VICE VERSA, SHALL BE FURNISHED AS THOUGH FULLY SET FORTH IN BOTH. WORK NOT PARTICULARLY DETAILED, MARKED OR SPECIFIED, SHALL BE IDENTICAL OR SIMILAR TO LIKE CASES OF CONSTRUCTION THAT ARE DETAILED, MARKED OR SPECIFIED. IF CONFLICTS OCCUR ON DRAWINGS AND/OR SPECIFICATIONS, THE MOST EXPENSIVE MATERIALS OR METHODS WILL PREVAIL.
   C. SHOULD AN ERROR APPEAR IN THE WORKING DETAILS OR SPECIFICATIONS OR IN WORK DONE BY OTHERS AFFECTING THIS WORK, THE CONTRACTOR SHALL NOTIFY THE ARCHITECT AT ONCE AND IN WRITING. IF THE CONTRACTOR PROCEEDS WITH THE WORK SO AFFECTED WITHOUT HAVING GIVEN SUCH WRITTEN NOTICE AND WITHOUT RECEIVING THE NECESSARY APPROVAL, DECISION OR INSTRUCTIONS IN WRITING FROM THE OWNER, THEN HE SHALL HAVE NO VALID CLAIM AGAINST THE OWNER, FOR THE COST OF SO PROCEEDING AND SHALL MAKE GOOD ANY RESULTING DAMAGE OR DEFECT. NO VERBAL APPROVAL, DECISION, OR INSTRUCTION SHALL BE VALID OR BE THE BASIS FOR ANY CLAIM AGAINST THE OWNER, ITS OFFICERS, EMPLOYEES OR AGENTS. THE FOREGOING INCLUDES TYPICAL ERRORS IN THE SPECIFICATIONS OR NOTATIONAL ERRORS IN THE WORKING DETAILS WHERE THE INTERPRETATION IS DOUBTFUL OR WHERE THE ERROR IS SUFFICIENTLY APPARENT AS TO PLACE A REASONABLY PRUDENT CONTRACTOR ON NOTICE THAT, SHOULD HE ELECT TO PROCEED, HE IS DOING SO AT HIS OWN RISK.
2. CONSTRUCTION SHALL CONFORM TO ALL APPLICABLE CODES AND REGULATIONS.
3. SHOP DRAWING NOTE:
   A. WHEN NOT ADDRESSED BY DIVISION 1 OF THE SPECIFICATIONS, PAPER FORMAT STRUCTURAL SHOP DRAWINGS SHALL BE SUBMITTED IN THE FORM OF THREE COPIES MINIMUM OF EACH SHEET. WHERE SUBMITTALS ARE ELECTRONIC, FORMAT SHALL BE PDF.
   B. THE PURPOSE OF SHOP DRAWING SUBMITTALS BY THE CONTRACTOR IS TO DEMONSTRATE TO THE STRUCTURAL ENGINEER THAT HE UNDERSTANDS THE DESIGN CONCEPT PERTAINING WHICH MATERIAL HE INTENDS TO FURNISH AND INSTALL, AND BY DETAILING THE FABRICATION AND INSTALLATION METHODS HE INTENDS TO USE ON A STAND ALONE SET OF DOCUMENTS. DUPLICATION OF DESIGN DOCUMENTS FOR THE PURPOSE OF SHOP DRAWINGS IS NOT ACCEPTABLE.
   C. PRIOR TO FABRICATION, SHOP DRAWINGS SHALL BE SUBMITTED FOR REVIEW BY THE STRUCTURAL ENGINEER. SHOP DRAWING SUBMITTALS SHALL INCLUDE, BUT ARE NOT NECESSARILY LIMITED TO, STRUCTURAL STEEL, REINFORCING STEEL, & GLUE-LAMINATED BEAMS.
   D. PRIOR TO SUBMISSION THE CONTRACTOR SHALL REVIEW ALL SUBMITTALS FOR CONFORMANCE WITH THE CONTRACT DOCUMENTS AND SHALL STAMP SUBMITTALS AS BEING "REVIEWED FOR CONFORMANCE".
   E. SHOP DRAWING SUBMITTALS PROCESSED BY THE STRUCTURAL ENGINEER ARE NOT CHANGE ORDERS.
   F. ANY DETAIL ON THE SHOP DRAWINGS THAT DEVIATES FROM THE CONTRACT DOCUMENTS SHALL CLEARLY BE MARKED WITH THE NOTE "THIS IS A CHANGE".
4. SAFETY NOTE:
   A. IT IS THE CONTRACTORS RESPONSIBILITY TO COMPLY WITH THE PERTINENT SECTIONS, AS THEY APPLY TO THIS PROJECT, OF THE "CONSTRUCTION SAFETY ORDERS" ISSUED BY THE STATE OF CALIFORNIA LATEST EDITION, AND ALL OSHA REQUIREMENTS.
   B. THE CONTRACTOR SHALL BE RESPONSIBLE FOR ADEQUATE DESIGN AND CONSTRUCTION OF ALL FORMS AND SHORING REQUIRED. SHORING INDICATIONS (LOCATION, DIRECTION, DURATION, ETC.) ARE ONLY SHOWN ON THE STRUCTURAL DRWGS WHEN REQUIRED TO IMPLEMENT THE DESIGN INTENT OF THE FINAL WORK PRODUCT. DETERMINATION WHETHER SHORING IS REQUIRED FOR TEMPORARY OR INTERMEDIATE CONDITIONS DURING CONSTRUCTION IS WHOLLY THE RESPONSIBILITY OF THE CONTRACTOR.
   C. THE OWNER AND THE STRUCTURAL ENGINEER DO NOT ACCEPT ANY RESPONSIBILITY FOR THE CONTRACTOR'S FAILURE TO COMPLY WITH THESE REQUIREMENTS.
5. THE CONTRACTOR SHALL NOTIFY THE ARCHITECT AND STRUCTURAL ENGINEER WHERE A CONFLICT OR DISCREPANCY OCCURS BETWEEN THE STRUCTURAL DRAWINGS AND ANY OTHER PORTION OF THE CONTRACT DOCUMENTS OR EXISTING FIELD CONDITIONS. SUCH NOTIFICATION SHALL BE GIVEN IN DUE TIME SO AS NOT TO AFFECT THE CONSTRUCTION SCHEDULE. IN CASE OF A CONFLICT BETWEEN STRUCTURAL DRAWINGS AND SPECIFICATIONS THE SPECIFICATIONS SHALL GOVERN. GO ONLY VERIFY WITH SENOR IF THE LEAST RESTRICTIVE CONDITION IS NOTED IN THE SPECIFICATIONS PRIOR TO COMMENCING ANY WORK.
6. WHEN CONSTRUCTION ATTACHES TO OR IS WITHIN AN EXISTING BUILDING, A COMPLETE SET OF DRAWINGS OF THE EXISTING BUILDING SHALL BE KEPT ON THE JOB SITE. CONTRACTOR TO OBTAIN THESE DRAWINGS FROM THE OWNER (IF THEY ARE AVAILABLE).
7. CONTRACTOR SHALL PROVIDE AN ALLOWANCE EQUAL TO 2% OF THE BID FOR STRUCTURAL STEEL, MISC. IRON AND REINFORCING STEEL TO BE USED AT THE DISCRETION OF THE STRUCTURAL ENGINEER. UNUSED AMOUNT TO REVERT TO THE OWNER UPON COMPLETION OF THE JOB.
8. ANY SUBSTITUTIONS FOR STRUCTURAL MEMBERS, HARDWARE OR DETAILS SHALL BE REVIEWED BY THE ARCHITECT AND STRUCTURAL ENGINEER. SUCH REVIEW WILL BE BILLED ON A TIME AND MATERIALS BASIS TO THE GENERAL CONTRACTOR WITH NO GUARANTEE THAT THE SUBSTITUTION WILL BE ALLOWED.
9. DO NOT SCALE DRAWINGS. CONTACT THE ARCHITECT OR STRUCTURAL ENGINEER FOR ANY DIMENSIONS NOT SHOWN.
10. THESE DRAWINGS ARE NOT COMPLETE UNTIL REVIEWED AND ACCEPTED BY LOCAL BUILDING OFFICIALS AND THE OWNER AND SIGNED BY THE STRUCTURAL ENGINEER.

ABBREVIATIONS
S0S9N001-1

AB	ANCHOR BOLT	MB	MACHINE BOLT
ABV	ABOVE	MFR	MANUFACTURER
BLW	BELOW	MI	MALLEABLE IRON
BOF	BOTTOM OF FOOTING	MTL	METAL
BRG	BEARING	(N)	NEW
BTWN	BETWEEN	NIC	NOT IN CONTRACT
CC	CENTER TO CENTER	NS	NEAR SIDE
CTJ	CONTROL JOINT	NTS	NOT TO SCALE
CJP	COMPLETE JOINT PENETRATION	NW	NORMAL WEIGHT
CLR	CLEAR	OH	OPPOSITE HAND
CMU	CONCRETE MASONRY UNIT	OSB	ORIENTED STRAND BOARD
CJ	CONSTRUCTION JOINT	PC	PIECE
CONT	CONTINUOUS	PJP	PARTIAL JOINT PENETRATION
CONTR	CONTRACTOR	PT	PRESSURE TREATED
CSK	COUNTERSINK	REIN	REINFORCING
DF	DOUGLAS FIR	RWD	REDWOOD
DL	DEAD LOAD	SC	SLIP CRITICAL
DO	DITTO	SHTG	SHEATHING
DWG	DRAWING	SIM	SIMILAR
(E)	EXISTING	SMS	SHEET METAL SCREW
EF	EACH FACE	SP	STRUCTURAL PANEL
EJ	EXPANSION JOINT	STFNR	STIFFENER
EL	ELEVATION	STGRD	STAGGERED
EN	EDGE NAILING	STL	STEEL
EOS	EDGE OF SLAB	T&B	TOP & BOTTOM
EQ	EQUAL	T&G	TONGUE & GROOVE
EW	EACH WAY	THRD	THREADED
EWEF	EACH WAY EACH FACE	TN	TOE NAIL
FB	FACE OF BLOCK(OR BRICK) OR FLAT BAR	TO	TOP OF
FC	FACE OF CONCRETE OR FRAMING CLIP(SIMPSON A35 UNO)	TOC	TOP OF CONCRETE (SLAB UNO)
		TOF	TOP OF FOOTING OR TOP OF FRAMING
FF	FINISH FLOOR	TOS	TOP OF STEEL
FS	FACE OF STUD OR FAR SIDE	TOW	TOP OF WALL
FT	FIRE TREATED	UNO	UNLESS NOTED OTHERWISE
GA	GAUGE OR GAGE	W/	WITH
GLB	GLUED LAMINATED BEAM	W/O	WITHOUT
HB	HEADED BOLT	WP	WORK POINT
HDG	HOT DIPPED GALVANIZED	WS	WOOD SCREW
HDR	HEADER	WWF	WELDED WIRE FABRIC
HSB	HIGH STRENGTH BOLT	CL	CENTERLINE
HSS	HOLLOW STRUCTURAL SECTION	PL	PLATE
HT	HEIGHT	WF	WIDE FLANGE
JH	JOIST HANGER	#	NUMBER OR POUNDS
LL	LIVE LOAD	SQ	SQUARE
LLH	LONG LEG HORIZONTAL	Ø	ROUND OR DIAMETER
LLV	LONG LEG VERTICAL		CONT WOOD IN SECTION
LS	LAG SCREW		WOOD BLOCKING IN SECTION
LW	LIGHT WEIGHT		END OF WOOD PIECE
LWIC	LIGHT WEIGHT INSULATING CONC	(A)	"MEMBER" ABOVE
		(B)	"MEMBER" BELOW

DESIGN CRITERIA
S0S9N002-1

1. CODES AND STANDARDS
   2012 INTERNATIONAL BUILDING CODE (IBC)
   ASCE 7-10
   ACI 318-11
   AISC 360-10, 341-10, 358-10
   TMS 402-11/ACI 530-11/ASCE 5-11
   TMS 602-11/ACI 530.1-11/ASCE 6-11
   2012 NDS, 2008 SDPWS
   H18-8 VA SEISMIC DESIGN REQUIREMENTS
2. VERTICAL LOADS
   ROOF LIVE LOAD = 20 PSF
   FLOOR LIVE LOAD = 60 PSF
   FLOOR PARTITION LIVE LOAD = 15 PSF
   CORRIDORS = 100 PSF
   LIVE LOADS ARE REDUCED WHERE PERMITTED BY CODE.
3. SOILS VALUES
   ALLOWABLE SOILS PRESSURE
   A. DL + LL 5500 PSF
   B. DL + LL + SEISMIC 7330 PSF
   FOOTING
   MINIMUM DEPTH = 24"
   MINIMUM WIDTH = 24"
4. LATERAL LOADS
   SEISMIC:
   SITE CLASS D Cs = 0.2117
   S_s = 1.959 ; S_{DS} = 1.306
   S_1= 0.827; S_{D1}= 0.827
   R = 6; I_E= 1.0
   Ωo = 2; Cd = 5
   I_P= 1.0 TYPICAL
   I_P= 1.5 PER ASCE 7-10 SECT 13.1.3
   RISK CATEGORY: II
   SEISMIC DESIGN CATEGORY: E
   SEISMIC BASE SHEAR
   = 256.0 KIPS

   SEISMIC FORCE RESISTING SYSTEM:
   SPECIAL CONCENTRIC BRACED FRAMES
   ANALYSIS PROCEDURE:
   EQUIVALENT LATERAL FORCE PROCEDURE
   WIND:
   V_{ULT} = 105 MPH, V_{ASD} = 85 MPH
   RISK CATEGORY: II
   EXPOSURE CATEGORY: C
   IW = 1.0; GCPI = ±0.18

STATEMENT OF STRUCTURAL SPECIAL INSPECTIONS AND TESTING
S0S9N004-1

1. SPECIAL INSPECTIONS AND TESTING SHALL BE PROVIDED BY A THIRD PARTY INSPECTION AGENCY, EMPLOYED BY THE CONTRACTOR, AND APPROVED BY THE VA TO INSPECT THE PARTICULAR TYPE OF CONSTRUCTION. TESTS AND INSPECTIONS, AS REQUIRED BY SECTIONS 110, 1704, 1707, AND 1708 OF THE 2010 CBC, SHALL BE PERFORMED DURING CONSTRUCTION ON THE TYPES OF WORK LISTED BELOW:

	INSPECTIONS	TESTING
■ STEEL CONSTRUCTION	SECTION 1704.3 & TABLE 1704.3	SECTION 1708.3
■ CONCRETE CONSTRUCTION	SECTION 1704.4 & TABLE 1704.4	SECTION 1708.2
☐ MASONRY CONSTRUCTION-LEVEL 1	SECTION 1704.5 & TABLE 1704.5.1	-
☐ MASONRY CONSTRUCTION-LEVEL 2	SECTION 1704.5 & TABLE 1704.5.3	-
☐ WOOD CONSTRUCTION	SECTION 1704.6	-
☐ HIGH-LOAD DIAPHRAGM	SECTION 1704.6.1	-
☐ SOILS	SECTION 1704.7 & TABLE 1704.7	-
☐ PILE FOUNDATIONS	SECTION 1704.8 & TABLE 1704.8	-
☐ PIER FOUNDATIONS	SECTION 1704.9 & TABLE 1704.9	-
☐ HELICAL PILE FOUNDATIONS	SECTION 1704.10	-
■ POST-INSTALLED ANCHORS	MANUFACTURER'S ICC REPORT	-

2. INSPECTIONS MAY BE CONTINUOUS OR PERIODIC AS ALLOWED BY THE INDIVIDUAL MATERIAL OR COMPONENT INSPECTION SECTIONS AND TABLES OF SECTION 1704.
3. THE SPECIAL INSPECTOR SHALL SUBMIT INSPECTION REPORTS TO THE VA AND THE DESIGN PROFESSIONAL IN RESPONSIBLE CHARGE. THE REPORTS SHALL INDICATE WHETHER WORK INSPECTED CONFORMED TO THE CONSTRUCTION DOCUMENTS. ANY DISCREPANCIES SHALL BE IMMEDIATELY BROUGHT TO THE ATTENTION OF THE CONTRACTOR FOR CORRECTION. IF DISCREPANCIES ARE NOT CORRECTED, THEY SHALL BE BROUGHT TO THE ATTENTION OF THE BUILDING OFFICIAL AND THE DESIGN PROFESSIONAL IN RESPONSIBLE CHARGE.
4. ALL SPECIAL INSPECTION AGENCIES / INDIVIDUALS AND SHOP FABRICATORS SHALL BE APPROVED BY THE VA PRIOR TO COMMENCEMENT OF WORK.
5. TESTING AND INSPECTION RECORDS SHALL BE RETAINED UNTIL COMPLETION OF CONSTRUCTION.
6. THE CONTRACTOR SHALL SUBMIT A WRITTEN STATEMENT TO THE VA ACKNOWLEDGING RESPONSIBILITY FOR CONSTRUCTION OF THE MAIN WIND FORCE RESISTING SYSTEM PRIOR TO COMMENCEMENT OF THAT WORK AS REQUIRED BY SECTION 1709 OF THE 2012 IBC.
7. SPECIAL INSPECTIONS FOR SEISMIC AND WIND RESISTANCE SHALL BE CONDUCTED FOR ALL ITEMS LISTED IN SECTION 1705.3 AND 1705.4 AS APPLICABLE. SPECIAL INSPECTIONS FOR SEISMIC RESISTANCE SHALL INCLUDE ALL ITEMS IN SECTION 1707. SPECIAL INSPECTIONS FOR WIND REQUIREMENTS SHALL INCLUDE ALL ITEMS IN SECTION 1706. STRUCTURAL TESTING FOR SEISMIC RESISTANCE SHALL BE IN ACCORDANCE WITH SECTION 1708.
8. MASONRY CONSTRUCTION LEVEL 2 APPLIES TO STRUCTURES CLASSIFIED AS OCCUPANCY CATEGORY IV ONLY.
9. ALL SOILS AND FOUNDATION EXCAVATION INSPECTIONS SHALL BE BY THE GEOTECHNICAL ENGINEER OF RECORD.
10. FOR TESTING AND INSPECTION REQUIREMENTS FOR NON-STRUCTURAL MATERIALS AND COMPONENTS, SEE CONSTRUCTION DOCUMENTS AND COMPLY WITH CHAPTER 17 OF THE 2012 IBC.

FOUNDATIONS
S0S9N005-1

1. ALL FOUNDATION WORK SHALL BE DONE IN ACCORDANCE WITH THE RECOMMENDATIONS OF THE SOILS REPORT # 25648/REBELI LAN JEBEAUDWELL BELLO LTD DATED FEBRUARY 18, 2014.
2. FOUNDATIONS SHALL BEAR ON NON-EXPANSIVE ENGINEERED FILL
   SEE NOTES AND DETAILS ON SHEET S1.2.
3. ALL FILLING, BACKFILLING AND COMPACTION SHALL BE DONE UNDER THE OBSERVATION OF A REPRESENTATIVE OF THE SOILS ENGINEER AND MUST BE COMPACTED TO THE MINIMUM DENSITY SPECIFIED IN ACCORDANCE WITH THE PROCEDURE OUTLINED IN THE SOILS REPORT.
4. BUILDING PAD CONSTRUCTION SHALL CONFORM TO THE REQUIREMENTS OF THE SOILS REPORT. THE EXTENT AND DEPTH OF OVEREXCAVATION AND PLACEMENT OF ENGINEERED FILL SHALL AT A MINIMUM BE AS SHOWN ON THE PLANS. FINAL DEPTH AND EXTENT OF EXCAVATION AND FILL SHALL BE DETERMINED AT TIME OF CONSTRUCTION BY A REPRESENTATIVE OF THE SOILS ENGINEER. FOUNDATION DEPTHS INDICATED ON PLANS ARE FOR ESTIMATING PURPOSES ONLY.
5. BOTTOMS OF ALL FOUNDATIONS SHALL BE LEVEL. CHANGES IN BOTTOM OF FOUNDATION ELEVATION SHALL BE MADE ACCORDING TO STEPPED FOOTING DETAIL ON THE TYPICAL DETAIL SHEET.
6. FOUNDATION CONCRETE MAY BE PLACED DIRECTLY INTO NEAT EXCAVATIONS PROVIDED THE EXCAVATIONS ARE STABLE (AS DETERMINED BY A REPRESENTATIVE OF THE SOILS ENGINEER). OTHERWISE, FOUNDATIONS SHALL BE FULLY FORMED. USE MINIMUM PLANKING SHOWN TO PROTECT AGAINST SLOUGHING, AS REQUIRED. PLANKING DOES NOT REPLACE FORMWORK REQUIRED TO STABILIZE EXCAVATION.

7. THE SURFACE OF ALL HORIZONTAL CONSTRUCTION JOINTS SHALL BE CLEANED & ROUGHENED BY EXPOSING CLEAN AGGREGATE SOLIDLY EMBEDDED IN MORTAR MATRIX.
8. NOTIFY THE STRUCTURAL ENGINEER BEFORE CASTING FOUNDATIONS.
9. A REPRESENTATIVE OF THE SOILS ENGINEER SHALL ADVISE THE VA IN WRITING THAT:
   A. THE BUILDING PAD WAS PREPARED IN ACCORDANCE WITH THE SOILS REPORT.
   B. THE UTILITY TRENCHES HAVE BEEN PROPERLY BACKFILLED AND COMPACTED AND;
   C. THE FOUNDATION EXCAVATION DEPTH AND MATERIAL ARE ADEQUATE TO ACHIEVE DESIGN BEARING CAPACITY; AND FORMING COMPLY WITH THE SOILS REPORT AND APPROVED PLAN.

METAL DECK NOTES
S0S9N007-1

1. PROVIDE METAL DECKING OF TYPE AND GAUGE AS SHOWN ON PLANS.
2. METAL FLOOR DECK SHALL BE COMPOSITE TYPE, CONFORMING TO ASTM A653, STRUCTURAL QUALITY, WITH MINIMUM YIELD STRENGTH OF 38 KSI AND SHALL BE ZINC COATED PER ASTM A653, G60 COATING DESIGNATION.
3. METAL ROOF DECK SHALL CONFORM TO ASTM A653, STRUCTURAL QUALITY, WITH MINIMUM YIELD STRENGTH OF 38 KSI AND SHALL BE ZINC COATED PER ASTM A653, G60 COATING DESIGNATION.
4. PRIOR TO FABRICATION, THE CONTRACTOR SHALL SUBMIT SHOP DRAWINGS FOR THE METAL DECKING, SHOWING DECK GAUGE, SIZE AND LAYOUT AS WELL AS CLOSURE CONDITIONS, WELDS TO SUPPORTS AND SIDE LAP DETAILS.
5. CONNECTION AND WELDING OF DECKING TO STRUCTURAL SUPPORTS AND DECK SIDE SEAMS SHALL BE AS SPECIFIED IN THE STRUCTURAL DRAWINGS. ALL ELECTRODES FOR WELDING SHALL COMPLY WITH AWS CODE, E60 SERIES MINIMUM.
6. ALL REINFORCED OPENINGS IN METAL DECK SHALL BE INSTALLED BY METAL DECK SUBCONTRACTOR.
7. AT METAL DECKS TO RECEIVE CONCRETE, ABSOLUTELY NO CONDUIT OR PIPING OF ANY TYPE IS TO BE PLACED HORIZONTALLY WITHIN THE DEPTH OF THE CONCRETE ABOVE THE METAL DECK.
8. AT METAL DECK WITHOUT CONCRETE FILL THE FOLLOWING MAY BE ATTACHED WITHOUT SPECIFIC APPROVAL OF THE STRUCTURAL ENGINEER: ACOUSTICAL TILE AND GYPSUM BOARD CEILINGS ONLY; NO PIPING, DUCTING OR CONDUIT. MAXIMUM CEILING WEIGHT - 3.5 PSF. MAXIMUM WIRE HANGER LOAD = 60#.
9. WHERE SUSPENSION OR HANGER WIRES ARE REQUIRED BY OTHERS, VERIFY AND COORDINATE LOCATIONS, PATTERNS, SPACINGS, ETC. WITH THE APPROPRIATE TRADE. DRILL OR PUNCH HOLES AT BOTTOM OF DECK FLUTES OF SUFFICIENT SIZE TO PASS SUPPORT WIRES. WIRE SUPPORTS SHALL BE LOOPED AND SECURED WITH A MINIMUM OF THREE (3) TIGHT TURNS AROUND A MINIMUM 1-1/2" X 12" LONG FURRING CHANNEL OR NO. 3 X 12" LONG REINFORCING BAR CENTERED ABOVE THE HOLE AND LAID IN THE DECK FLUTES.

CONCRETE
S0S9N001-1

1. STRUCTURAL CONCRETE SHALL ATTAIN 28 DAY COMPRESSIVE STRENGTH AS REQUIRED IN NOTE #28. MAXIMUM SLUMP SHALL NOT EXCEED 4 INCHES.
2. CONCRETE MIX DESIGNS SHALL BE PREPARED BY A REGISTERED CIVIL ENGINEER, REVIEWED BY CONTRACTOR'S TESTING LABORATORY AND SUBMITTED TO THE STRUCTURAL ENGINEER FOR REVIEW.
3. CEMENTITIOUS MATERIALS:
   CEMENT SHALL CONFORM TO ASTM C-150 TYPE I OR II.
   FLY ASH SHALL CONFORM TO ASTM C-618. MAX. QUANTITY OF FLY ASH SHALL BE AS GIVEN IN SPECS (15% MAX UNO).
4. CONCRETE AGGREGATES SHALL CONFORM TO ASTM C-33 FOR NORMAL WEIGHT CONCRETE AND ASTM C-330 FOR LIGHTWEIGHT CONCRETE.
5. NON-SHRINK GROUT OR DRYPACK SHALL CONSIST OF A PREMIXED NONMETALLIC FORMULA.
6. REINFORCING STEEL SHALL CONFORM TO ASTM A-615 GRADE 60 FOR #3 AND LARGER, EXCEPT REINFORCING STEEL TO BE WELDED SHALL CONFORM TO ASTM A-706. CONTRACTOR SHALL SUBMIT REBAR MILL CERTIFICATES.
7. ALL PREHEATING AND WELDING OF REINFORCING BARS SHALL BE DONE IN ACCORDANCE WITH AWS D1.4 LATEST EDITION AND SHALL BE CONTINUOUSLY INSPECTED BY A QUALIFIED LABORATORY. CONTRACTOR SHALL FURNISH WPS FOR ALL REBAR WELDING TO THE LABORATORY.
8. REINFORCING STEEL SHALL BE FABRICATED ACCORDING TO "MANUAL OF STANDARD PRACTICE FOR REINFORCED CONCRETE CONSTRUCTION".
9. WIRE FABRIC SHALL CONFORM TO ASTM A-185.
10. DIMENSIONS SHOWN FOR LOCATION OF REINFORCING ARE TO THE FACE OF BARS LISTED AND DENOTE CLEAR COVERAGE. NON-PRESTRESSED, CAST-IN-PLACE CONCRETE COVERAGE SHALL BE AS FOLLOWS, UNO:
    CONCRETE DEPOSITED DIRECTLY AGAINST GROUND (EXCEPT SLABS)-- 3"
    CONCRETE EXPOSED TO GROUND OR WEATHER BUT PLACED IN FORMS:
    #5 AND SMALLER---------- 1-1/2"
    #6 AND LARGER---------- 2"
    BEAMS & COLUMNS (TIES)---------- 1-1/2"
    BEAMS & COLUMNS (MAIN REINFORCING)---------- 2"
    CAST-IN-PLACE WALLS (EXTERIOR FACE & SOIL SIDE)---------- SEE ABOVE
    CAST-IN-PLACE WALLS (INTERIOR FACE-#11 & SMALLER)------- 3/4"
    TILT-UP WALLS---------- SEE DETAILS
    SLABS (ON FORMS)---------- 3/4"
    SLABS (ON GROUND)---------- 2" CLEAR FROM TOP UNO
11. SPLICES IN CONTINUOUS REINFORCEMENT SHALL BE LAPPED UNO, SEE SCHEDULE THIS SHEET. SPLICES IN ADJACENT BARS SHALL BE GREATER THAN 5'-0" APART. SPLICE CONTINUOUS BOTTOM BEAMBTRS GRADE BEAMS, STRUCTURAL SLABS ON GRADE AND MAT FOUNDATIONS AS FOLLOWS UNO: TOP BARS AT CENTERLINE OF SUPPORT; BOTTOM BARS AT MID-SPAN. SPLICE CONTINUOUS BARS IN ELEVATED SLABS AND BEAMS, ETC. AS FOLLOWS UNO: TOP BARS AT MID-SPAN; BOTTOM BARS AT CENTERLINE OF SUPPORT. ALL BARS SIZE #14 AND LARGER SHALL BE CONTINUOUS FOR FULL LENGTH SHOWN OR SPLICED WITH MECHANICAL COUPLERS AS NOTED IN DETAILS. SPLICES IN WWF SHALL BE 1-1/2 MESHES WIDE.
12. THE MINIMUM CLEAR SPACING BETWEEN PARALLEL BARS IN A LAYER SHALL NOT BE LESS THAN THE LARGER OF BAR DIAMETER, 1", OR 33% GREATER THAN THE MAXIMUM AGGREGATE SIZE (NOMINAL), WHICHEVER IS GREATEST. THIS REQUIREMENT ALSO APPLIES TO THE CLEAR SPACING BETWEEN DIFFERENT LAYERS OF PARALLEL BARS AND TO THE CLEAR DISTANCE BETWEEN A CONTACT LAP SPLICE AND ADJACENT SPLICES OR BARS.
13. ALL HOOKS SHALL BE STANDARD HOOKS UNLESS OTHERWISE SHOWN OR NOTED. AT WALLS, PROVIDE HOOKS AT ENDS OF ALL REINFORCING AT ENDS, CORNERS AND INTERSECTIONS, UNO.
14. CONSTRUCTION JOINTS SHALL BE MADE ROUGH AND ALL LATANCE DEPOSITED FROM THE SURFACE. CONCRETE MAY BE ROUGHENED BY CHIPPING THE ENTIRE SURFACE, SAND BLASTING, OR RAKING THE SURFACE TO PROVIDE 1/4" DEEP DEFORMATIONS.
15. REMOVE ALL DEBRIS FROM FORMS BEFORE CASTING ANY CONCRETE.
16. REINFORCING, DOWELS, BOLTS, ANCHORS, SLEEVES, ETC. TO BE EMBEDDED IN CONCRETE SHALL BE SECURELY POSITIONED BEFORE PLACING CONCRETE.
17. ANCHOR BOLTS (AB'S) CAST IN CONCRETE OR MASONRY FOR WALL SILL AND LEDGERAPPLICATIONS SHALL BE HEADED BOLTS WITH CUT THREADS CONFORMING TO ASTM A307, UNO. REFER TO "WOOD" NOTES FOR ADDITIONAL REQUIREMENTS FOR BOLTS IN CONTACT WITH PRESSURE TREATED OR FIRE RETARDANT MATERIAL. REFER TO "STRUCTURAL STEEL" NOTE FOR REQUIREMENTS FOR ANCHOR RODS (AR'S) CAST IN CONCRETE FOR COLUMN BASE PLATE AND STEEL EMBED APPLICATIONS.
18. WALL PIERS SHALL BE CAST IN HORIZONTAL LAYERS OF 2'-0" MAXIMUM DEPTH WITH SIDE FORMS.
19. CONCRETE IN WALLS, PIERS OR COLUMNS SHALL SET AT LEAST 2 HOURS BEFORE PLACING CONCRETE IN BEAMS, SPANDRELS, OR SLABS SUPPORTED THEREON.
20. HORIZONTAL WALL BARS IN MULTI-CURTAIN CAST IN PLACE WALLS SHALL BE STAGGERED.
21. DOWEL ALL VERTICAL REINFORCING IN WALLS AND COLUMNS FROM FOUNDATION WITH SAME SIZE BAR.
22. CONSOLIDATE CONCRETE PLACED IN FORMS BY MECHANICAL VIBRATING EQUIPMENT SUPPLEMENTED BY HAND-SPADING, RODDING OR TAMPING. USE EQUIPMENT AND PROCEDURES FOR CONSOLIDATION OF CONCRETE IN ACCORDANCE WITH THE RECOMMENDED PRACTICES OF ACI 309 TO SUIT THE TYPE OF CONCRETE AND PROJECT CONDITIONS. CONCRETE SHALL NOT BE DROPPED THROUGH REINFORCING STEEL (AS IN WALLS) SO AS TO CAUSE SEGREGATION OF AGGREGATES. IN SUCH CASES HOPPERS AND CHUTES OR TRUNKS OF VARIABLE LENGTHS SHALL BE USED SO THAT THE FREE UNCONFINED FALL OF CONCRETE SHALL NOT EXCEED 8 FEET.
23. NO WOOD SPREADERS ALLOWED. NO WOOD STAKES ALLOWED IN AREAS TO BE CONCRETED.
24. ADDITIONAL REINFORCING IN PRECAST OR TILT-UP PANELS REQUIRED FOR LIFTING STRESSES SHALL BE SUPPLIED BY CONTRACTOR.
25. PROVIDE #5 X 4'-0" DIAGONAL REINFORCING AT TOP AND BOTTOM OF SLAB AT ALL RE-ENTRANT CORNERS TYPICAL. THIS APPLIES TO SLAB ON GRADE, CONCRETE OVER METAL DECK, AND ELEVATED STRUCTURAL SLAB CONDITIONS.
26. ALL SAW CUTTING SHALL BE DONE AFTER INITIAL SET HAS OCCURRED TO AVOID TEARING OR DAMAGE BY THE SAW BLADE. BUT BEFORE INITIAL SHRINKAGE HAS OCCURRED.
27. NOTIFY STRUCTURAL ENGINEER A MINIMUM OF 48 HOURS BEFORE PLACING ANY CONCRETE.
28. CONCRETE STRENGTHS & MIX PROPERTIES:

ITEM	F'C @ 28 DAYS	MAX AGGR. SIZE	WEIGHT	MAX W/CM* RATIO
A. FOUNDATIONS, ELEVATOR PITS, TIE BEAMS	3000 PSI	1-1/2"	NW	0.58
B. SLAB ON GRADE	3500 PSI	1"	NW	0.45
C. NW CONC FILL OVER DECK	3500 PSI	3/4"	NW	0.52
SITE AND MISCELLANEOUS - SEE CIVIL OR ARCH'L DRAWINGS				

* W/CM = WATER : CEMENTITIOUS MATERIAL RATIO

DRILLED-IN ANCHORS
S0S9N001-1

1. FOR CONCRETE CONSTRUCTION, EPOXY ANCHORS SHALL BE HILTI HIT-RE 500-SD PER ESR-2322, HILTI HIT-HY 200 PER ESR-3013 OR SIMPSON SET-XP PER ESR-2508 FOR THRD ROD & REBAR. EXPANSION ANCHORS SHALL BE HILTI KB-TZ PER ESR-1917 OR SIMPSON STRONG-BOLT 2 PER ESR-3037. SCREW ANCHORS SHALL BE HILTI KWIK HUS-EZ (KH-EZ) PER ESR-3027 OR SIMPSON TITEN HD PER ESR-2713.
2. FOR MASONRY CONSTRUCTION, EPOXY ANCHORS SHALL BE HILTI HIT HY 150 MAX PER ESR-1967 OR SIMPSON SET PER ESR-1772 FOR THRD'D ROD & REBAR. EXPANSION ANCHORS SHALL BE HILTI KWIK BOLT 3 (KB3) PER ESR-1385 OR SIMPSON WEDGE-ALL PER ESR-1396. SCREW ANCHORS SHALL BE HILTI HUS-H PER ESR-2369 OR SIMPSON TITEN HD PER ESR-1056.
3. ANCHOR TYPE, SIZE & EMBEDMENT SHALL BE INDICATED IN DRAWINGS. POST-INSTALLED ANCHORS FOR REPAIR SHALL BE EVALUATED ON A CASE BY CASE BASIS. NOTIFY STRUCTURAL ENGINEER FOR REPAIRS.
4. ANCHORS SHALL BE INSTALLED IN ACCORDANCE WITH THE REQUIREMENTS GIVEN IN THE ICC REPORT.
5. UNLESS NOTED OTHERWISE ANCHORS HAVE BEEN DESIGNED FOR SPECIAL INSPECTION. PROVIDE SPECIAL INSPECTION AS INDICATED IN THE ICC REPORT.
6. WHEN INSTALLING DRILLED-IN ANCHORS IN EXISTING CONCRETE OR MASONRY, USE CARE AND CAUTION TO AVOID CUTTING OR DAMAGING EXISTING REINFORCING BARS. DO NOT INSTALL ANCHORS IN PRESTRESSED CONCRETE ELEMENTS.
7. ANCHORS INSTALLED FROM THE BOTTOM INTO METAL DECK WITH CONCRETE SHALL BE INSTALLED IN THE CENTER OF THE LOW FLUTE OF THE DECKING UNLESS NOT

COLD FORMED METAL FRAMING
5405N001-1

1. GALVANIZED SHEET STEEL SHALL CONFORM TO ASTM A653, STRUCTURAL QUALITY, WITH A MINIMUM YIELD STRENGTH OF 33 KSI FOR 43 MILS (18 GA) AND THINNER AND ASTM A653, STRUCTURAL QUALITY, WITH A MINIMUM YIELD STRENGTH OF 50 KSI FOR 54 MILS (16 GA) AND THICKER. HOT-ROLLED CARBON SHEET AND STRIP STEEL USED IN THE FABRICATION OF COLD-FORMED MEMBERS SHALL CONFORM TO ASTM A1011 WITH A RUST INHIBITIVE COATING.
2. METAL STUDS AND JOISTS SHALL BE OF SIZE AND THICKNESS SHOWN ON DRAWINGS WITH THE MINIMUM EFFECTIVE SECTION PROPERTIES SHOWN IN THE TABLE(S).
3. MINIMUM THICKNESS SHOWN IN TABLE FOR THE THICKNESS SPECIFIED REPRESENTS 95% OF DESIGN THICKNESS PER 2007 AISI-NAS W/ 2004 SUPPLEMENT.
4. METAL FRAMING SHALL BE PER ICC-ES NO. 4943P. CONTRACTOR SHALL BE RESPONSIBLE FOR OBTAINING AGENCY APPROVAL FOR ANY SUBSTITUTIONS.
5. WELDING SHALL BE IN ACCORDANCE WITH AWS D1.3 "STRUCTURAL WELDING CODE-SHEET STEEL". WELDERS SHALL BE AWS CERTIFIED. WELDING RODS: E60XX SERIES. ALL FIELD WELDING SHALL HAVE SPECIAL INSPECTION.
6. TYPICAL METAL TRACK SHALL BE SAME GAUGE AS STUDS WHICH IT SUPPORTS, UNPUNCHED, WITH A FLANGE WIDTH OF 1 1/4 INCHES AND A DEPTH EQUAL TO THE NOMINAL STUD PLUS 2 TIMES THE TRACK THICKNESS PLUS THE RADIUS. NESTED TRACKS SHALL BE FABRICATED TO FILL THE OUTSIDE OF A TYPICAL METAL TRACK. DEEP LEG TRACKS SHALL HAVE A MINIMUM FLANGE WIDTH OF 2 INCHES. USE SLOTTED SLIP TRACKS WHERE SPECIFIED. SEE SECTIONS AND TYPICAL METAL STUD DETAILS.
7. METAL STUDS SHALL NOT HAVE PUNCH-OUTS CLOSER THAN 10" FROM THE END OF THE STUD OR AT INTERMEDIATE LATERAL BEARING POINTS OF STUDS.

COLD FORMED METAL FRAMING SECTION PROPERTIES - SSMA C STUDS & JOISTS - S162 SECTIONS [2,3]
5405N002-1

GAUGE/MIL	20/33		18/43		16/54		14/68		S STUDS & JOISTS
DESIGNATION	S162-33		S162-43		S162-54		S162-68		
MIN THICKNESS	0.0329		0.0428		0.0538		0.0677		
DEPTH "D"	IX	SX	IX	SX	IX	SX	IX	SX	
2 1/2"	0.235	0.180	0.302	0.240	0.370	0.288	0.450	0.357	
3 5/8"	0.551	0.292	0.710	0.389	0.873	0.468	1.069	0.584	
4"	0.692	0.332	0.892	0.443	1.098	0.533	1.346	0.666	
6"	1.793	0.577	2.316	0.767	2.860	0.927	3.525	1.164	
8"	3.582	0.757	4.633	1.158	5.736	1.397	7.089	1.757	
10"	-	-	8.025	1.414	9.950	1.712	12.325	2.465	
12"	-	-	-	-	15.730	2.024	19.518	2.953	

1. FOR COMPLETE SECTION DESIGNATIONS IN ACCORDANCE WITH SSMA STANDARDS, ADD MEMBER DEPTH TO FRONT OF INDICATED DESIGNATION. EXAMPLE: FOR 3 5/8" MEMBER WITH GAUGE/MIL OF 18/43, THE FULL DESIGNATION IS 362S162-43.
2. SECTION PROPERTIES SHOWN ARE EFFECTIVE PROPERTIES CONFORMING TO AISI A7.2 PER SSMA STANDARDS FOR MATERIAL STRENGTH NOTED BELOW.
3. PROVIDE 33 KSI MIN MATERIAL FOR 18/43 & LISTED SECTIONS, PROVIDE 50 KSI MATERIAL FOR 16/54 & HEAVIER SECTIONS.

DEFERRED APPROVALS
1009S001-1

1. THE FOLLOWING ITEMS REQUIRE DEFERRED APPROVAL FROM THE VA:
   A. WINDOW WALL/STORE FRONT SYSTEMS
   B. PREFABRICATED METAL STAIRS AND CONNECTIONS
   C. FIRE SPRINKLER SUPPORT
   D. EQUIPMENT STRUCTURAL ANCHORAGE
   E. VIBRATION ISOLATION FOR MEDICAL EQUIPMENT
2. THE DESIGN OF THE ABOVE ITEMS IS BY THE CONTRACTOR/MANUFACTURER. CONTRACTOR/MANUFACTURER MUST PREPARE ALL NECESSARY CALCULATIONS AND DRAWINGS PER THE IBC UNDER THE SUPERVISION OF A CIVIL ENGINEER, REGISTERED IN CALIFORNIA, AND SHALL OBTAIN ALL NECESSARY PLAN CHECK APPROVALS FROM THE ENFORCEMENT AGENCY.
3. INSTALLATION OF THE ABOVE ITEMS SHALL NOT BE STARTED UNTIL DETAILED PLANS, SPECIFICATIONS AND ENGINEERING CALCULATIONS HAVE BEEN REVIEWED BY THE ARCHITECT OR STRUCTURAL ENGINEER OF RECORD, AND APPROVED BY THE VA.

POWDER ACTUATED FASTENERS (SHOT PINS)
1007N016-1

1. THESE NOTES GOVERN ALL CONDITIONS CALLED OUT ON THE PLANS AS 'SHOT PINS' UNLESS SPECIFICALLY NOTED OTHERWISE.
2. ALL SHOT PINS SHALL BE X-U UNIVERSAL KNURLED SHANK FASTENERS WITH SHANK DIAMETER OF 0.157" AS MANUFACTURED BY HILTI INCORPORATED IN ACCORDANCE WITH ICC ESR-2269 AND THE CURRENT EDITION OF THE HILTI 2008 'PRODUCT TECHNICAL GUIDE.'
3. ALL SHOT PINS SHALL INCLUDE P8 STEEL WASHERS.
4. SHOT PINS DRIVEN INTO STEEL BASE MATERIAL SHALL MAINTAIN A MINIMUM EDGE DISTANCE AT ALL STEEL ELEMENTS OF 1/2" AND MINIMUM FASTENER SPACING SHALL BE 1". LENGTH OF PIN SHALL BE AS REQUIRED TO PENETRATE THRU STEEL MEMBER UNO AT 3/4" THICK STEEL, PENETRATION NEED NOT EXCEED 1/2".
5. SHOT PINS DRIVEN INTO CONCRETE BASE MATERIAL SHALL MAINTAIN A MINIMUM EDGE DISTANCE AT ALL CONCRETE ELEMENTS OF 3" AND MINIMUM FASTENER SPACING SHALL BE 4". PINS SHALL HAVE 1 1/4" PENETRATION UNO MINIMUM CONCRETE THICKNESS SHALL BE 3 TIMES THE PENETRATION DEPTH. CONCRETE SHALL ATTAIN FULL DESIGN STRENGTH PRIOR TO INSTALLING SHOT PINS.
6. SHOT PINS DRIVEN INTO 3 1/4" MINIMUM LIGHT WEIGHT CONCRETE FILL OVER 3"X 20 GA MINIMUM METAL DECK MAY BE INSTALLED FROM THE TOP OR FROM THE BOTTOM IN EITHER THE HIGH OR LOW FLUTE. PINS INSTALLED FROM THE TOP SHALL BE SPACED AS NOTED ABOVE FOR TYPICAL CONCRETE ELEMENTS. PINS INSTALLED FROM THE BOTTOM IN THE HIGH FLUTES SHALL BE INSTALLED WITHIN 1" OF FLUTE CENTER. PINS INSTALLED FROM THE BOTTOM IN THE LOW FLUTES SHALL BE INSTALLED WITHIN 1" OF THE FLUTE CENTER AND SHALL BE NO CLOSER THAN 1 1/8" TO THE EDGE OF THE LOW FLUTE. PINS INSTALLED FROM THE BOTTOM SHALL BE SPACED NO CLOSER THAN 5 1/2" PARALLEL TO THE FLUTES. PINS SHALL HAVE 1" PENETRATION INTO CONCRETE UNO CONCRETE SHALL ATTAIN FULL DESIGN STRENGTH PRIOR TO INSTALLING SHOT PINS.
7. SHOT PINS MAY BE DRIVEN INTO 8" NOMINAL MINIMUM THICKNESS FULLY GROUTED NORMAL-WEIGHT CMU WITH TYPE S MORTAR AND MINIMUM F'M = 1500 PSI AT TIME OF INSTALLATION. SHOT PINS MAY BE INSTALLED INTO THE FACE SHELLS, HORIZONTAL MORTAR JOINTS OR VERTICALLY CENTERED IN THE THE TOP OF GROUTED CELLS. SHOT PINS SHALL NOT BE INSTALLED IN VERTICAL MORTAR JOINTS OR WITHIN 1" OF VERTICAL MORTAR JOINTS. NO MORE THAN ONE SHOT PIN MAY OCCUR IN AN INDIVIDUAL MASONRY UNIT CELL AND MUST BE INSTALLED A MINIMUM OF 4" FROM THE EDGE OF THE WALL. SHOT PINS IN MORTAR JOINTS MUST BE A MINIMUM OF 8" FROM THE END OF THE WALL AND SHALL HAVE A MINIMUM SPACING OF 8".
8. THE OPERATOR, TOOL, AND FASTENER SHALL BE PRE-QUALIFIED BY THE PROJECT INSPECTOR OF RECORD. SHOT PIN INSTALLERS SHALL BE CERTIFIED BY HILTI AND HAVE A CURRENT HILTI ISSUED OPERATORS LICENSE. SHOT PIN INSTALLATION SHALL MEET ALL OSHA REQUIREMENTS.
9. SHOT PINS USED TO ATTACH HANGER WIRES FOR SUSPENDED CEILINGS SHALL BE TESTED IN ACCORDANCE WITH DSA IR 25-2

WINDOW SYSTEM DESIGN CRITERIA
1005N001-1

2012 IBC ULTIMATE WIND SPEED 105 MPH EXPOSURE CATEGORY C.

1. ALL MULLIONS AND THEIR CONNECTIONS SHALL BE DESIGNED TO SPAN BETWEEN STRUCTURAL SUPPORTS AS SHOWN ON DRAWINGS. VERIFY CEILING HEIGHTS WITH ARCHITECTURAL DRAWINGS.
2. ALL MULLIONS AND THEIR CONNECTIONS SHALL ALLOW FOR A RELATIVE MOVEMENT BETWEEN STORIES OF NOT LESS THAN 1.5" DUE TO SEISMIC LOADS.
3. SUBMIT COMPLETE SHOP DRAWINGS AND CALCULATIONS SIGNED BY A QUALIFIED REGISTERED CALIFORNIA CIVIL ENGINEER PRIOR TO FABRICATION.
4. DETAILS PROVIDED IN THESE DRAWINGS ARE FOR REFERENCE ONLY. WINDOW SYSTEM MANUFACTURER SHALL DESIGN AND SUPPLY ALL CONNECTION MATERIALS (INCLUDING EMBEDDED ITEMS, DIAGONAL BRACING ANGLES, BRACKETS, OUTRIGGERS, ETC.) AS REQUIRED FOR THE SUPPORT OF THE WINDOW SYSTEM. EMBEDDED ITEMS SHALL BE INSTALLED BY THE GENERAL CONTRACTOR.
5. WINDOW SYSTEMS AND FACADE FENESTRATION SHALL BE DESIGNED TO RESIST A 3-SECOND DURATION BLAST LOADING PER THE DESIGN LEVEL THREAT RESULTING FROM THE STAND-OFF DISTANCE LISTED IN THE LOADING SCHEDULE BELOW AND THE REQUIREMENTS OF THE VETERANS ADMINISTRATION PHYSICAL SECURITY DESIGN MANUAL FOR VA FACILITIES DATED JULY 2007. FACADE FENESTRATION LOCATED AT BUILDING ELEVATIONS EXPOSED TO BLAST LOADING SHALL COMPLY WITH THE FOLLOWING DESIGN CRITERION:
   A. ALL FACADE FENESTRATION SHALL BE DESIGNED TO CRACK, BUT FRAGMENTS SHALL ENTER THE OCCUPIED SPACE AND LAND ON THE FLOOR NO FURTHER THAN 10' FROM THE FACADE IN RESPONSE TO THE CALCULATED PEAK PRESSURES AND IMPULSES RESULTING FROM THE DESIGN LEVEL THREATS LISTED BELOW.
   B. FENESTRATION SHALL BE CONTRUCTED USING DEBRIS MITIGATING MATERIALS.
   C. GLASS SHALL BE RESTRAINED WITHIN THE MULLIONS WITH A SUFFICIENT BITE OR STRUCTURAL SILICONE ADHESIVE TO ALLOW IT TO DEVELOP ITS POST-DAMAGE CAPACITY.
   D. MULLIONS SHALL BE DESIGNED TO ACCEPT THE DESIGN LEVEL PRESSURES WHILE SUSTAINING DEFORMATINS NO GEATER THAN L/30.

ELEVATION	OUT OF PLANE DESIGN PRESSURE	LOAD TYPE	DEFLECTION CRITERIA
NORTH	90 PSF	BLAST LOADING (50' SETBACK DISTANCE)	L/30
WEST	90 PSF	BLAST LOADING (50' SETBACK DISTANCE)	L/30
SOUTH	40 PSF	WIND LOAD (COMP & CLADDING)	L/180
EAST	40 PSF	WIND LOAD (COMP & CLADDING)	L/180

STRUCTURAL OBSERVATION
1006N001-1

1. IN ACCORDANCE WITH SECTION 1709 OF THE 2012 IBC, THIS PROJECT IS REQUIRED TO HAVE STRUCTURAL OBSERVATION. STRUCTURAL OBSERVATION MEANS THE VISUAL OBSERVATION OF THE STRUCTURAL SYSTEM, FOR GENERAL CONFORMANCE TO THE APPROVED PLANS AND SPECIFICATIONS, AT SIGNIFICANT CONSTRUCTION STAGES AND AT COMPLETION OF THE STRUCTURAL SYSTEM. STRUCTURAL OBSERVATION DOES NOT INCLUDE OR WAIVE THE RESPONSIBILITY FOR THE INSPECTIONS REQUIRED BY IBC SECTIONS 110 OR 1704. THE FOLLOWING PROJECT MILESTONES SHALL BE OBSERVED:
   A. FOUNDATIONS (PRIOR TO CONCRETE PLACEMENT)
   B. STEEL ERECTION PRIOR TO COMPLETION OF FIRST ELEVATED LEVEL (FLOOR OR ROOF)
   C. METAL DECK AND CONCRETE OVER DECK REINFORCING (PRIOR TO CONCRETE PLACEMENT)
2. THE OWNER SHALL EMPLOY THE ARCHITECT OR STRUCTURAL ENGINEER OF RECORD, OR ANOTHER REGISTERED PROFESSIONAL ENGINEER OR ARCHITECT DESIGNATED TO PERFORM STRUCTURAL OBSERVATION. OBSERVED DEFICIENCIES SHALL BE REPORTED IN WRITING TO THE OWNER'S REPRESENTATIVE, SPECIAL INSPECTOR, CONTRACTOR AND BUILDING OFFICIAL. THE STRUCTURAL OBSERVER SHALL SUBMIT TO THE BUILDING OFFICIAL A STATEMENT THAT THE FIELD VISITS HAVE OCCURRED AND IDENTIFY ANY REPORTED DEFICIENCIES THAT, TO THE BEST OF THE STRUCTURAL OBSERVER'S KNOWLEDGE, HAVE NOT BEEN RESOLVED.
3. NOTIFY THE STRUCTURAL ENGINEER A MINIMUM OF 48 HOURS IN ADVANCE OF PROJECT MILESTONES SO THAT OBSERVATIONS MAY BE SCHEDULED.

DEMOLITION NOTES
1005N006-1

1. THESE NOTES ALSO APPLY TO CONDITIONS WHERE PARTIAL OR SELECTIVE DEMOLITION IS REQUIRED AS PART OF THE WORK.
2. SAFETY NOTES:
   A. IT IS THE CONTRACTOR'S RESPONSIBILITY TO COMPLY WITH THE PERTINENT SECTIONS, AS THEY APPLY TO THIS PROJECT, OF THE "CONSTRUCTION SAFETY ORDERS" ISSUED BY THE STATE OF CALIFORNIA LATEST EDITION AND ALL OSHA REQUIREMENTS.
   B. THE ARCHITECT, STRUCTURAL ENGINEER AND OWNER DO NOT ACCEPT ANY RESPONSIBILITY FOR THE CONTRACTOR'S FAILURE TO COMPLY WITH THESE REQUIREMENTS.
   C. THE CONTRACTOR SHALL BE RESPONSIBLE FOR ADEQUATE DESIGN AND CONSTRUCTION OF ALL FORMWORK, BRACING, AND SHORING REQUIRED. SHORING INDICATIONS (LOCATION, DIRECTION, DURATION, ETC.) ARE ONLY SHOWN ON THE STRUCTURAL DRWGS WHEN REQUIRED TO IMPLEMENT THE DESIGN INTENT OF THE FINAL WORK PRODUCT. DETERMINATION WHETHER SHORING IS REQUIRED FOR TEMPORARY OR INTERMEDIATE CONDITIONS DURING CONSTRUCTION IS WHOLLY THE RESPONSIBILITY OF THE CONTRACTOR.
3. SHORE OR BRACE BEAMS, COLUMNS AND WALLS AS REQUIRED TO MAINTAIN THE STABLE INTEGRITY OF THE EXISTING STRUCTURE PRIOR TO DEMOLITION. IT IS THE CONTRACTOR'S SOLE RESPONSIBILITY TO DESIGN AND PROVIDE COMPETENT SHORING AND BRACING FOR ALL LOADS IMPOSED DURING AND AFTER DEMOLITION THROUGH COMPLETION OF NEW CONSTRUCTION. CONTRACTOR IS TO PREPARE A DEMOLITION AND SHORING PLAN DEPICTING LOCATIONS AND METHOD OF SHORING AND DEMOLITION SEQUENCING.
4. ALL DIMENSIONS GIVEN TO EXISTING STRUCTURE ARE APPROXIMATE. VERIFY BY FIELD MEASUREMENTS THE DIMENSIONS OF THE EXISTING STRUCTURE. WHERE ACTUAL CONDITIONS DEVIATE FROM DETAILS SHOWN ON THE DRAWINGS, NOTIFY THE STRUCTURAL ENGINEER FOR INSTRUCTIONS BEFORE PROCEEDING WITH WORK.
5. ANY CONFLICTING ITEMS NOT SPECIFICALLY SHOWN (SUCH AS UNDERGROUND PIPES, CONDUITS, ETC.) SHALL BE BROUGHT TO THE ATTENTION OF THE STRUCTURAL ENGINEER PRIOR TO FURTHER DEMOLITION.
6. DEMOLITION AND REMOVAL OF EXISTING CONSTRUCTION SHALL BE MADE IN SUCH A MANNER AS TO MINIMIZE OR AVOID DAMAGE TO ADJACENT CONSTRUCTION.
7. A COMPLETE SET OF ORIGINAL DRAWINGS OF THE EXISTING STRUCTURE IS TO BE KEPT ON THE JOBSITE. CONTRACTOR SHALL OBTAIN THESE DRAWINGS FROM THE OWNER WHERE AVAILABLE.
8. EXTENT OF DEMOLITION IS TO BE AS INDICATED ON PLANS, SECTIONS AND DETAILS. VERIFY STORAGE AND REUSE OF EXISTING MATERIALS WITH ARCHITECTURAL DRAWINGS. DEMOLITION IS TO INCLUDE REMOVAL AND DISPOSAL OF DEMOLISHED CONSTRUCTION. SEE SPECIFICATIONS FOR ADDITIONAL DEMOLITION INSTRUCTIONS.
9. PROVIDE A 10% CONTINGENCY ALLOCATION BASED ON BID FOR ALL WORK SHOWN ON THE STRUCTURAL DRAWINGS FOR SUPPLEMENTAL STRUCTURAL WORK TO BE IMPLEMENTED AT THE DISCRETION OF THE STRUCTURAL ENGINEER. THIS ALLOCATION IS TO FUND CONSTRUCTION SHOWN ON "SUPPLEMENTAL INSTRUCTIONS" AS ISSUED BY THE STRUCTURAL ENGINEER AND ONLY AFTER HIS REVIEW OF THE COST. ANY UNUSED PORTION OF THE ALLOCATION IS TO REVERT TO THE OWNER AT THE COMPLETION OF THE PROJECT.
10. CONTRACTOR SHALL RETAIN THE SERVICES OF A STRUCTURAL ENGINEER REGISTERED IN THE STATE OF CALIFORNIA TO PROVIDE SELECTIVE DEMOLITION AND REPLACEMENT OF EXISTING CONSTRUCTION IN AREAS NECESSARY FOR CLEARANCE OF PILE DRIVING EQUIPMENT. PLAN SHALL BE SUBMITTED TO THE STRUCTURAL ENGINEER FOR REVIEW.

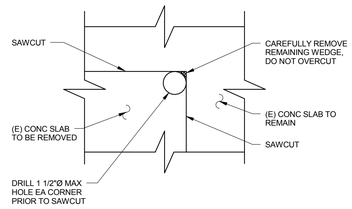

1 SS002 SAWCUT OPENING IN EXISTING SLAB OR WALL
3206D012-4

A SS002 MECHANICAL UNIT SCHEDULE

MK	UNIT	MAX WEIGHT	MOUNT	ANCHORAGE TO STRUCTURE
B 1	BOILER	700#	ROOF	PER MANFR. & INSTALLING CONTRACTOR, SEE MECH'L DWGS. MIN (4) 1/2"Ø SIMPSON STRONG-BOLT 2 EXPANSION ANCHORS W/ 2 3/4" EMBED
B 2	BOILER	700#	ROOF	PER MANFR. & INSTALLING CONTRACTOR, SEE MECH'L DWGS. MIN (4) 1/2"Ø SIMPSON STRONG-BOLT 2 EXPANSION ANCHORS W/ 2 3/4" EMBED
BT 1	BUFFER TANK	7000#	ROOF	5/8"Ø SIMPSON STRONG-BOLT 2 EXPANSION ANCHORS W/ WASHERS & 3 3/8" EMBED (4 MIN)
ET 1	EXPANSION TANK	170#	ROOF	1/2"Ø SIMPSON STRONG-BOLT 2 EXPANSION ANCHORS W/ 2 3/4" EMBED (3 MIN)
ET 2	EXPANSION TANK	170#	ROOF	1/2"Ø SIMPSON STRONG-BOLT 2 EXPANSION ANCHORS W/ 2 3/4" EMBED (3 MIN)
CU 1	CONDENSING UNIT	175#	ROOF	1/4"Ø SIMPSON STRONG-BOLT 2 EXPANSION ANCHORS W/ 1 3/4" EMBED (4 MIN, 1 PER CORNER)
CU 2	CONDENSING UNIT	175#	ROOF	1/4"Ø SIMPSON STRONG-BOLT 2 EXPANSION ANCHORS W/ 1 3/4" EMBED (4 MIN, 1 PER CORNER)
AHU 1	AIR-HANDLING UNIT	14000#	ROOF	PER MANFR. & INSTALLING CONTRACTOR, SEE MECH'L DWGS. MIN (4) 5/8"Ø SIMPSON STRONG-BOLT 2 EXPANSION ANCHORS W/ WASHERS & 5 1/8" EMBED
CH 1	CHILLER	4000#	ROOF	5/8"Ø SIMPSON STRONG-BOLT 2 EXPANSION ANCHORS W/ WASHERS & 3 3/8" EMBED (4 MIN, 1 PER CORNER)
CH 2	CHILLER	4000#	ROOF	5/8"Ø SIMPSON STRONG-BOLT 2 EXPANSION ANCHORS W/ WASHERS & 3 3/8" EMBED (4 MIN, 1 PER CORNER)
CH 3	CHILLER	4000#	ROOF	5/8"Ø SIMPSON STRONG-BOLT 2 EXPANSION ANCHORS W/ WASHERS & 3 3/8" EMBED (4 MIN, 1 PER CORNER)
AS 1	AIR SEPARATOR	290#	ROOF	1"Ø SIMPSON STRONG-BOLT 2 EXPANSION ANCHORS W/ WASHERS & 5 1/4" EMBED (3 MIN)
AS 2	AIR SEPARATOR	290#	ROOF	1"Ø SIMPSON STRONG-BOLT 2 EXPANSION ANCHORS W/ WASHERS & 5 1/4" EMBED (3 MIN)
EF 1	EXHAUST FAN	580#	ROOF	1/2"Ø SIMPSON STRONG-BOLT 2 EXPANSION ANCHORS W/ 2 3/4" EMBED (6 MIN)
EF 2	EXHAUST FAN	390#	ROOF	1/2"Ø SIMPSON STRONG-BOLT 2 EXPANSION ANCHORS W/ 2 3/4" EMBED (6 MIN)
EF 3	EXHAUST FAN	700#	ROOF	5/8"Ø SIMPSON STRONG-BOLT 2 EXPANSION ANCHORS W/ WASHERS & 3 3/8" EMBED (6 MIN)
EF 4	EXHAUST FAN	390#	ROOF	1/2"Ø SIMPSON STRONG-BOLT 2 EXPANSION ANCHORS W/ 2 3/4" EMBED (6 MIN)
EF 5A&B	EXHAUST FAN	240#	ROOF	1/2"Ø SIMPSON STRONG-BOLT 2 EXPANSION ANCHORS W/ 2 3/4" EMBED (6 MIN)
EF 6A&B	EXHAUST FAN	240#	ROOF	1/2"Ø SIMPSON STRONG-BOLT 2 EXPANSION ANCHORS W/ 2 3/4" EMBED (6 MIN)
CHP 1	CHILLED WATER PUMP	360#	ROOF	5/8"Ø SIMPSON STRONG-BOLT 2 EXPANSION ANCHORS W/ WASHERS & 3 3/8" EMBED (4 MIN, 1 PER CORNER)
CHP 2	CHILLED WATER PUMP	360#	ROOF	5/8"Ø SIMPSON STRONG-BOLT 2 EXPANSION ANCHORS W/ WASHERS & 3 3/8" EMBED (4 MIN, 1 PER CORNER)
HWPS 1	HOT WATER PUMP	175#	ROOF	5/8"Ø SIMPSON STRONG-BOLT 2 EXPANSION ANCHORS W/ WASHERS & 3 3/8" EMBED (4 MIN, 1 PER CORNER)
HWPS 2	HOT WATER PUMP	175#	ROOF	5/8"Ø SIMPSON STRONG-BOLT 2 EXPANSION ANCHORS W/ WASHERS & 3 3/8" EMBED (4 MIN, 1 PER CORNER)
HWPP 1	HOT WATER PUMP	175#	ROOF	5/8"Ø SIMPSON STRONG-BOLT 2 EXPANSION ANCHORS W/ WASHERS & 3 3/8" EMBED (4 MIN, 1 PER CORNER)
HWPP 2	HOT WATER PUMP	175#	ROOF	5/8"Ø SIMPSON STRONG-BOLT 2 EXPANSION ANCHORS W/ WASHERS & 3 3/8" EMBED (4 MIN, 1 PER CORNER)
FC 1	FAN COIL	50#	WALL	#14 SMS TO MTL STUD BACKING (4 MIN)
FC 2	FAN COIL	50#	WALL	#14 SMS TO MTL STUD BACKING (4 MIN)

FINAL BID DOCUMENTS

HILLIARD ARCHITECTS INC. COPYRIGHT

Revisions: Date

CONSULTANTS:

Buehler & Buehler Structural Engineers, Inc.
5 Third Street, Suite 1125, San Francisco, CA 94103
tel 415.495.1610 fax 415.495.1639
Sacramento · Phoenix · San Francisco

REGISTERED PROFESSIONAL ENGINEER JOHN D. HARVEY No. 4660 STRUCTURAL STATE OF CALIFORNIA

ARCHITECT/ENGINEERS:

ESTABLISHED 1988 HILLIARD ARCHITECTS GOING GREEN

HILLIARD ARCHITECTS, INC
251 Post Street, Suite 620
San Francisco, CA 94108-5017
Tel 415 989 6400, Fax 415 989 3056
www.HilliardArchitects.com

Drawing Title: GENERAL NOTES

Approved: Project Director

Project Title: GENOMICS RESEARCH BUILDING, PALO ALTO

Location: VAPAHCS - PALO ALTO

Date: 06/02/2014 | Checked | Drawn: BBSE

Project Number: 640-389

Building Number: 51

Drawing Number: SS002

Dwg. of

Office of Construction and Facilities Management

Department of Veterans Affairs

VA FORM 08-6231

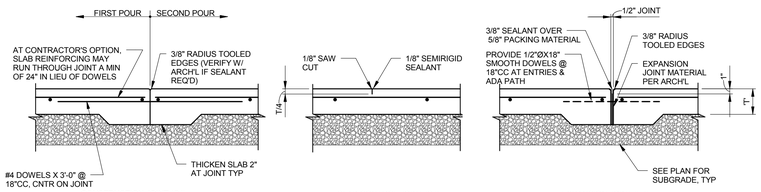

NOTE:
1. CONSTRUCTION JOINTS AND CONTROL JOINTS SHALL DIVIDE SLAB INTO AREAS NOT EXCEEDING 225 SQ FT WITHOUT REENTRANT CORNERS AND WITH LENGTH TO WIDTH RATIOS NOT EXCEEDING 1 1/2 TO 1. JOINT SPACING SHALL NOT EXCEED 15 FEET IN EITHER DIRECTION.
2. CONTRACTOR SHALL SUBMIT LAYOUT PLAN SHOWING PROPOSED CONTROL AND CONSTRUCTION JOINT LOCATIONS TO ARCHITECT & STRUCTURAL ENGINEER FOR REVIEW & APPROVAL.
3. SEMIRIGID SEALANT TO BE EUCLID EUCO #700 OR EQUAL.

1 SS003 SLAB ON GRADE JOINTS
3105D0001-12

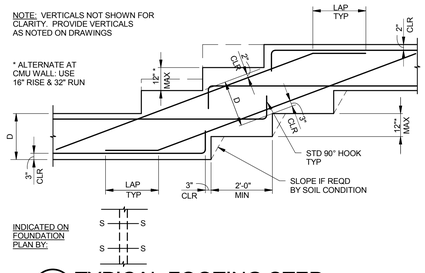

2 SS003 TYPICAL FOOTING STEP
2005D0016-32

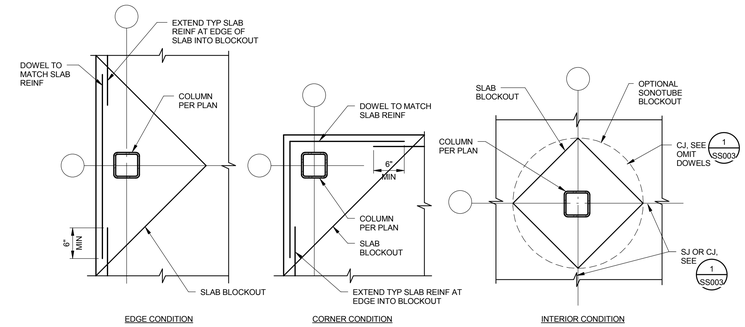

NOTE:
1. SLAB BLOCKOUT SHALL NOT EXTEND BEYOND FOOTING.
2. AT EXPOSED CONCRETE CONDITIONS, COORDINATE BLOCKOUT SHAPE AND SIZE W/ ARCH'L DWGS.

3 SS003 SLAB BLOCKOUT
3105D0002-12

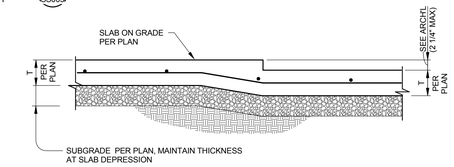

NOTE:
DETAIL APPLIES TO DEPRESSION/ STEPS ≤ 2 1/4", SEE 9 SS103 FOR LARGER DEPRESSION / STEPS.

7 SS003 SLAB DEPRESSION
3105D0004-12

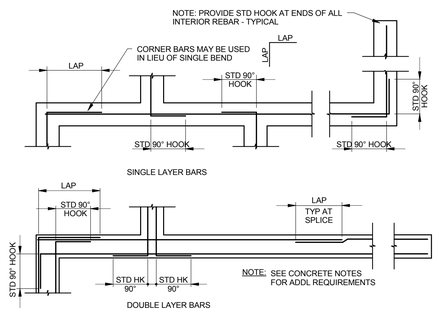

4 SS003 CORNER REINFORCING AT CONCRETE FTGS
2005D0011-32

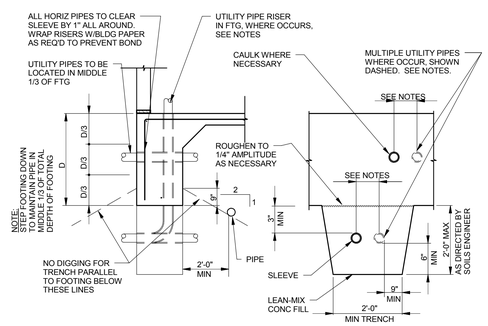

NOTES:
1. REINFORCING SHALL NOT BE INTERRUPTED, CUT OR DISPLACED BY PLACEMENT OF UTILITY PIPE.
2. LEAN MIX CONCRETE FILL TO BE PLACED BEFORE FTG IS CAST (MONO-POUR FTG CONC OPTIONAL). MAKE SAME WIDTH AS FTG AND FULL WIDTH OF PIPE TRENCH.
3. STEP FTG IF PIPE OCCURS IN LOWER THIRD OF ORIGINAL FOOTING DEPTH.
4. NO PIPES SHALL BE PLACED BELOW SPREAD FTGS OR WITHIN 2 TO 1 BEARING ZONE AROUND SPREAD FOOTING.
5. IF PIPE IS IN PLACE PRIOR TO CASTING CONCRETE, WRAP PIPE W/ 1" STYROFOAM INSULATION IN LIEU OF SLEEVE.
6. UTILITY PIPES ARE NOT ALLOWED PARALLEL IN FOOTING.
7. MULTIPLE UTILITY PIPES (TWO OR MORE) MAY BE INSTALLED AS SHOWN @ LEFT, PROVIDED THEY ARE SPACED A MINIMUM OF 4 PIPE/CONDUIT DIAMETERS ON CENTER WITH A MINIMUM OF 3" OF CONCRETE BETWEEN. PIPE DIAMETER INDICATED IS THE ROUGH HOLE SIZE THRU FOOTING.
8. UTILITY PIPES RISERS MAY OCCUR IN CONTINUOUS WALL FOOTINGS PROVIDED THEY ARE NO LARGER THAN (FOOTING WIDTH/6) AND OCCUR W/IN THE MIDDLE 1/2 OF THE FOOTING WIDTH. MULTIPLE RISERS MAY OCCUR IF SPACED AS NOTED @ LEFT.
9. UTILITY PIPES PERPENDICULAR TO FOOTINGS AND MORE THAN 2'-0" BELOW BOTTOM OF FOOTINGS DO NOT REQUIRE LEAN-MIX CONCRETE ENCASEMENT SUBJECT TO ACCEPTANCE OF THE SOILS ENGINEER.
10. CONDITIONS NOT CONFORMING TO THE PARAMETERS NOTED ABOVE SHALL BE REVIEWED ON A CASE-BY-CASE BASIS.

5 SS003 CONCRETE FOOTINGS AT UTILITY PIPES
2005D0003-32

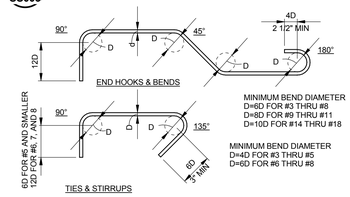

NOTE: ALL HOOKS SHALL BE 90° OR 180° STANDARD HOOKS UNLESS OTHERWISE SHOWN OR NOTED.

6 SS003 STANDARD REBAR HOOKS AND BENDS
3005D0001-12

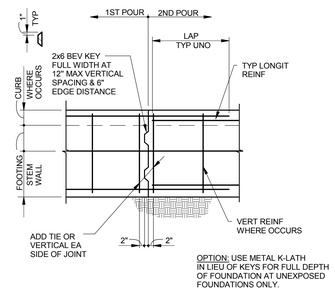

12 SS003 TYPICAL FOUNDATION CONCTRUCTION JOINT
2005D0012-24

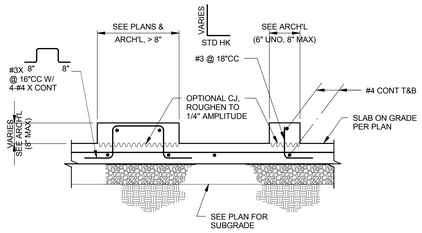

8 SS003 CURB AT SLAB ON GRADE
3105D0006-12

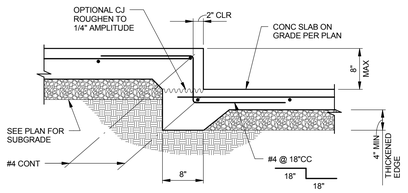

9 SS003 STEP IN SLAB
3105D0003-12

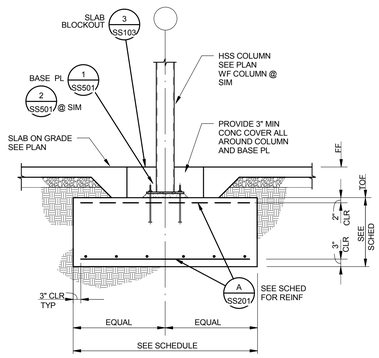

10 SS003 SECTION
TYPICAL SPREAD FOOTING
3105D0011-24

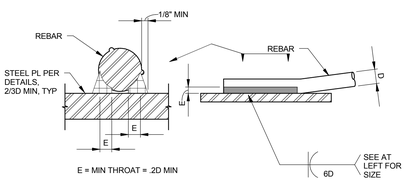

NOTES:
1. REINFORCING TO BE WELDED, EXCEPT ASTM A706, SHALL CONFORM TO THE MATERIAL PROPERTY REQUIREMENTS OF ANSI/AWS D1.4, NEWEST EDITION.
2. ALL PREHEATING AND WELDING SHALL BE DONE IN ACCORDANCE WITH ANSI/AWS D1.4, NEWEST EDITION.
3. ALL WELDING SHALL BE CONTINUOUSLY INSPECTED BY A QUALIFIED LABORATORY.

11 SS003 REBAR WELDING
3005D0002-32

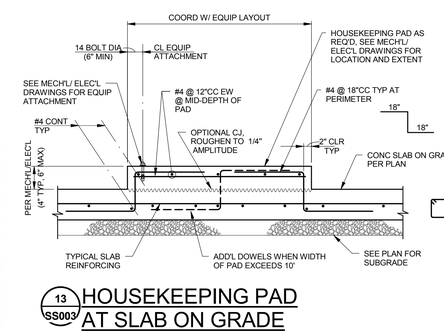

13 SS003 HOUSEKEEPING PAD AT SLAB ON GRADE
3105D0005-16

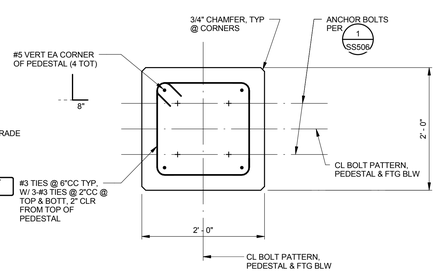

DETAIL 14 SS003 — 1" = 1'-0"

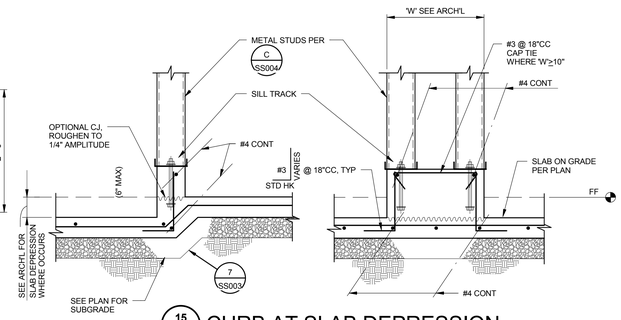

15 SS003 CURB AT SLAB DEPRESSION
3105D0007-12

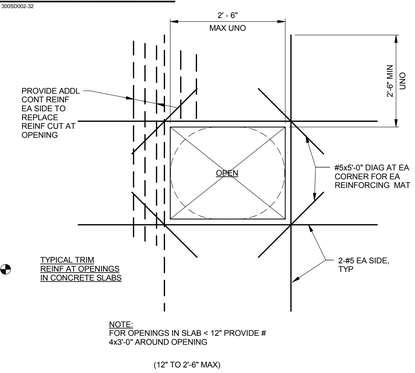

NOTE:
FOR OPENINGS IN SLAB < 12" PROVIDE # 4x2'-0" AROUND OPENING

(12" TO 2'-6" MAX)

16 SS003 SLAB OPENING REINFORCING
3305D0002-18

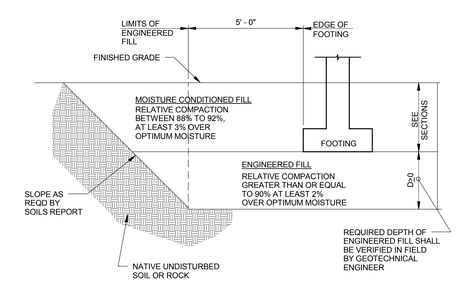

17 SS003 ENGINEERED FILL SECTION
2005D0001-32

HILLIARD ARCHITECTS INC. COPYRIGHT

FINAL BID DOCUMENTS

Revisions:	Date

CONSULTANTS:

Buehler & Buehler Structural Engineers, Inc.
5 Third Street, Suite 1123, San Francisco, CA 94103
tel 415.495.1635 fax 415.495.1639
Sacramento · Phoenix · San Francisco

REGISTERED PROFESSIONAL ENGINEER — JOHN D. HARVEY No. 4660 — STRUCTURAL — STATE OF CALIFORNIA

ARCHITECT/ENGINEERS:

ESTABLISHED 1988 HILLIARD ARCHITECTS GOING GREEN

HILLIARD ARCHITECTS, INC
251 Post Street, Suite 620
San Francisco, CA 94108-5017
Tel 415 989 6400, Fax 415 989 3056
www.HilliardArchitects.com

Drawing Title: **TYPICAL CONCRETE DETAILS**	Project Title: **GENOMICS RESEARCH BUILDING, PALO ALTO**	Project Number: **640-389**	Office of Construction and Facilities Management
Approved: Project Director	Location: VAPAHCS - PALO ALTO	Building Number: **51**	Department of Veterans Affairs
	Date: **06/02/2014** / Checked / Drawn: **BBSE**	Drawing Number: **SS003** Dwg. of	

VA FORM 08-6231

A/SS004 EXTERIOR WALL OPENING FRAMING SCHEDULE

5415D008-1

'W' WIDTH MAX	JAMBS	HEADER	SILL			
			20 GA	18 GA	16 GA	14 GA
4'-0"	J2	H4	S2	S2	S1	S1
8'-0"	J3	H4-8	S3	S3	S3	S3
12'-0"	J4	H4-10	S3	S4	S4	S3
20'-0"	(2) J4 (14 GA)	(8) H2 (14 GA)				S3

1. SEE SHEET S1.6 FOR JAMB, HEADER, AND SILL DETAILS.
2. H4-8, H4-10 INDICATES HEADER TYPE AND DEPTH OF VERTICAL STUD ELEMENTS INSIDE HEADER. FOR DETAIL, SEE 3/SS006
3. FOR CONNECTION @ BASE OF WALL AT JAMBS, SEE 1/SS004
4. FOR CONNECTION @ TOP OF WALL AT JAMBS, SEE 2/SS004 & 3/SS004

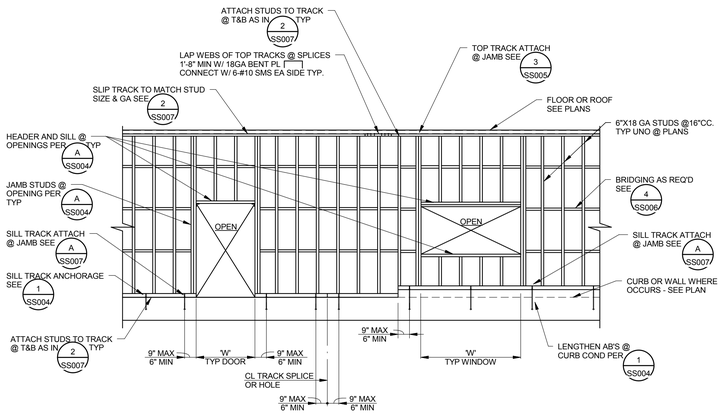

B/SS004 TYPICAL PLATFORM FRAMING METAL STUD WALL ELEVATION

5415D009-48

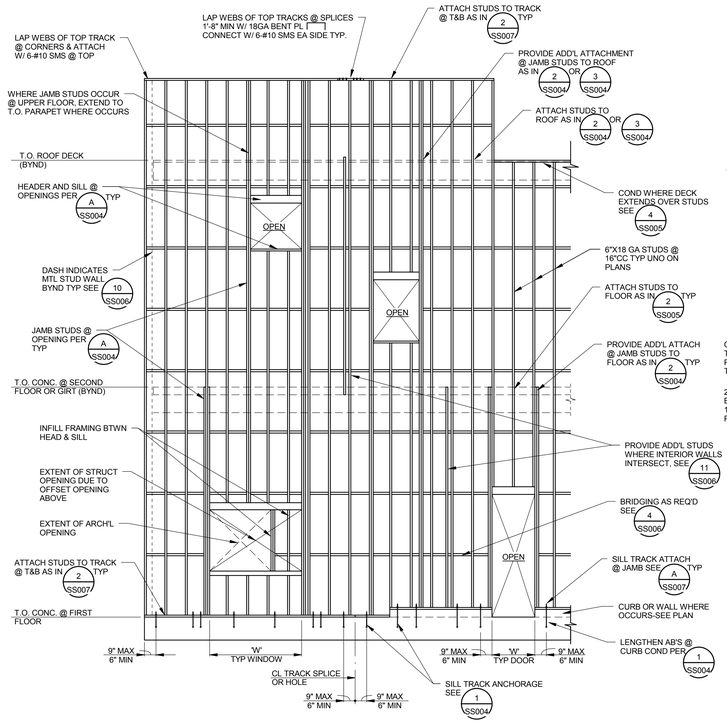

C/SS004 TYPICAL BALLOON FRAMING ELEVATION

5415D010-48

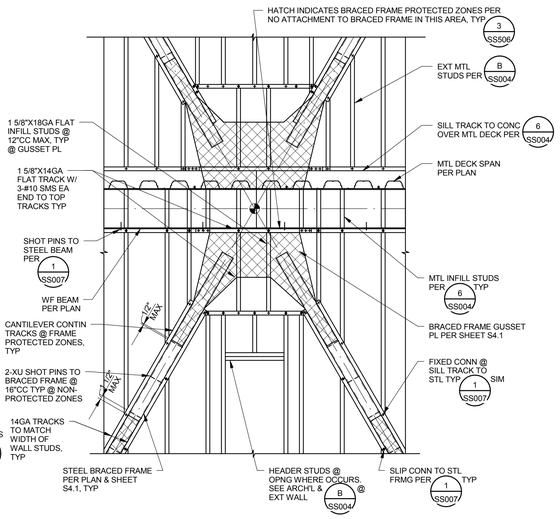

ELEVATION 10/SS004 — 1/2" = 1'-0"

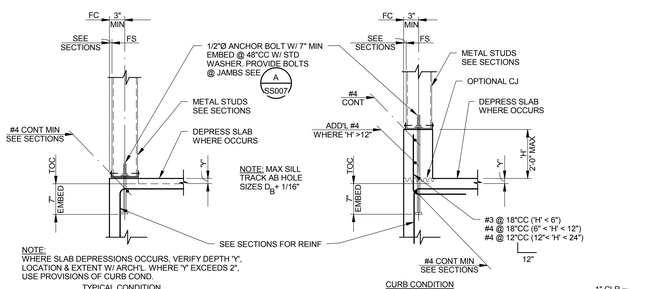

1/SS004 EXTERIOR METAL STUD SILL

5415D001-12

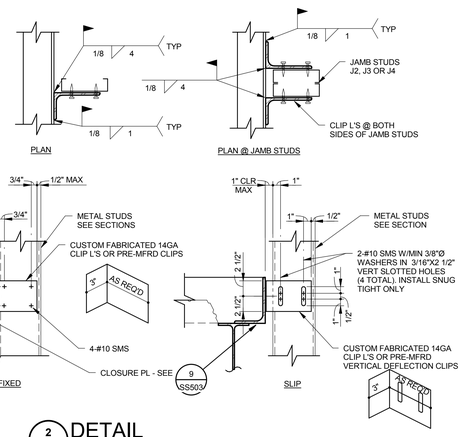

2/SS004 DETAIL

5415D002-3
METAL STUD SUPPORT @ CONC OVER METAL DECK EDGE

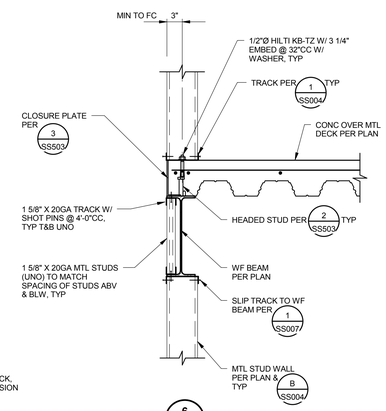

DETAIL 6/SS004 — 1" = 1'-0"

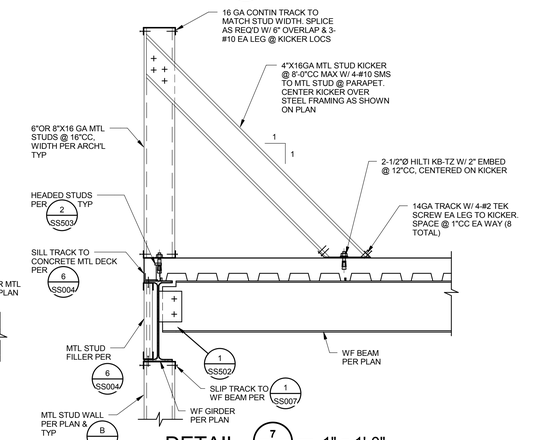

DETAIL 7/SS004 — 1" = 1'-0"

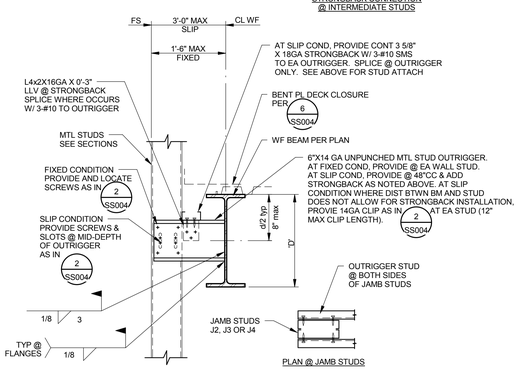

3/SS004 DETAIL

5415D003-12

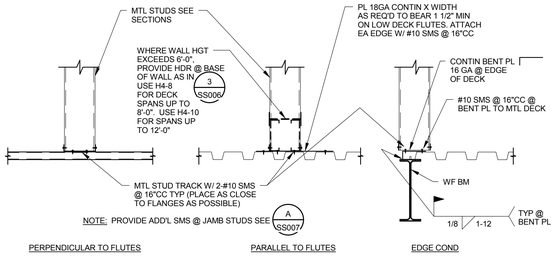

4/SS004 TYPICAL SILL TRACK TO METAL DECK

5415D004-12

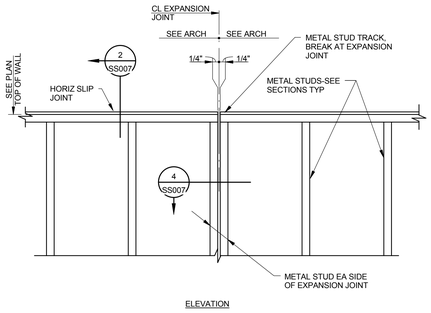

5/SS004 METAL STUD EXPANSION JOINT

5415D005-12

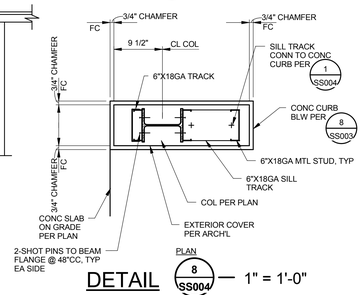

DETAIL 8/SS004 — 1" = 1'-0"

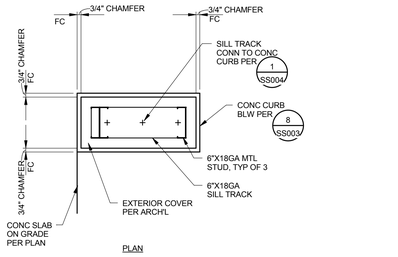

DETAIL 9/SS004 — 1" = 1'-0"

FINAL BID DOCUMENTS

HILLIARD ARCHITECTS INC. COPYRIGHT

Revisions:	Date

CONSULTANTS:

Buehler & Buehler Structural Engineers, Inc.
5 Third Street, Suite 1123, San Francisco, CA 94103
tel 415.495.1635 fax 415.495.1639
Sacramento · Phoenix · San Francisco

REGISTERED PROFESSIONAL ENGINEER — JOHN D. HARVEY No. 4660 — STRUCTURAL — STATE OF CALIFORNIA

ARCHITECT/ENGINEERS:

ESTABLISHED 1988 HILLIARD ARCHITECTS GOING GREEN

HILLIARD ARCHITECTS, INC
251 Post Street, Suite 620
San Francisco, CA 94108-5017
Tel 415 989 6400, Fax 415 989 3056
www.HilliardArchitects.com

Drawing Title: ***TYPICAL EXTERIOR METAL STUD DETAILS***

Approved: Project Director

Project Title: ***GENOMICS RESEARCH BUILDING, PALO ALTO***

Location: VAPAHCS - PALO ALTO

Date: *06/02/2014* | Checked | Drawn: *BBSE*

Project Number: *640-389*

Building Number: *51*

Drawing Number: ***SS004***

Dwg. of

Office of Construction and Facilities Management

Department of Veterans Affairs

VA FORM 08-6231

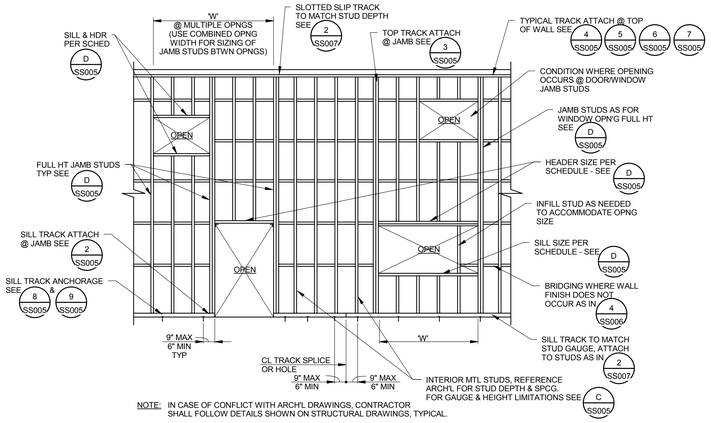

NOTE: IN CASE OF CONFLICT WITH ARCH'L DRAWINGS, CONTRACTOR SHALL FOLLOW DETAILS SHOWN ON STRUCTURAL DRAWINGS, TYPICAL.

A SS005 FULL HEIGHT INTERIOR METAL STUD WALL ELEVATION

5425D011-48

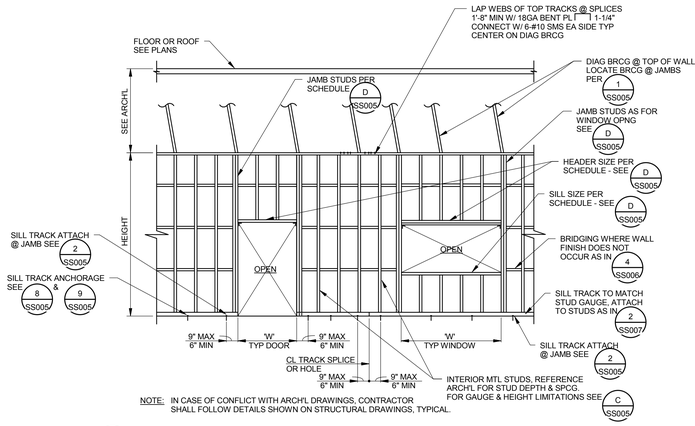

NOTE: IN CASE OF CONFLICT WITH ARCH'L DRAWINGS, CONTRACTOR SHALL FOLLOW DETAILS SHOWN ON STRUCTURAL DRAWINGS, TYPICAL.

B SS005 PARTIAL HEIGHT INTERIOR METAL STUD WALL ELEVATION

5425D012-48

C SS005 INTERIOR METAL STUD PARTITIONS

5425D061-1
MAXIMUM HEIGHT FOR METAL STUDS WITH
SDS = 0.75, IP = 1.5
DEFLECTION LIMIT L/180 - NON BEARING WITH DOUBLE CABINETS OR EQUIPMENT

16"CC SPACING

DEPTH	GAGE	DESIGNATION[3]	HEIGHT
3 5/8"	20	362S162-33	13'-4"
3 5/8"	18	362S162-43	17'-0"
3 5/8"	16	362S162-54	18'-1"
3 5/8"	14	362S162-68	19'-6"
4"	20	400S162-33	14'-10
4"	18	400S162-43	18'-4"
4"	16	400S162-54	19'-6"
4"	14	400S162-68	21'-2"
6"	20	600S162-33	22'-11"
6"	18	600S162-43	25'-11"
6"	16	600S162-54	27'-11"
6"	14	600S162-68	30'-6"
8"	20	800S162-33	25'-10"
8"	18	800S162-43	32'-1"
8"	16	800S162-54	35'-10"
8"	14	800S162-68	39'-10"

1. STUDS SHALL BE DEPTH AS INDICATED ON ARCH DRAWINGS AND GAUGE AS DETERMINED BY HEIGHT OF WALL AND THE SCHEDULE ABOVE.
2. SEE ELEVATIONS A SS005 & B SS005 FOR TYPICAL WALL FRAMING CONDITIONS.
3. DESIGNATION CONFORMS TO STEEL STUD MANUFACTURERS ASSOCIATION STANDARDS.
4. FOR WALL SUPPORTED CABINET INSTALLATION SEE 6 SS007
5. THE MAX. HTS NOTED IN THIS TABLE ARE BASED UPON THE USE OF SEISMIC COMPONENT LOAD FP OR A LIVE LOAD OF 5PSF, WHICHEVER GOVERNS.

5425D013-1

INTERIOR WALL OPENING FRAMING SCHEDULE D SS005

DEFLECTION LIMIT = L/180

'W' WIDTH MAX [12]	JAMBS	HEADER	SILL	HC4-8 SCREW SPCG	
				3-5/8" & 4" WALLS	6" & 8" WALLS
4'-0"	J1 [1]	H2	S1		
8'-0"	J2	H4	S1 [6]		
12'-0"	J3	HC4-8 [2, 9]	S2	8"CC	12"CC
16'-0"	J4	HC4-8 [3,4,5,9]	S4 [7]	8"CC	12"CC

1. USE J2 MINIMUM AT DOOR OPENINGS
2. H4-8 MAY BE USED AT 12'-0" OPNGS IN 16GA AND 14GA WALLS W/ THE EXCEPTION OF 8" WALLS
3. USE 18GA MIN. HEADERS AT 16'-0" OPNGS IN 3-5/8" & 4" WALLS
4. USE 16GA MIN. HEADERS AT 16'-0" OPNGS IN 6" WALLS
5. USE 14GA HEADERS AT 16'-0" OPNGS IN 8" WALLS
6. USE S2 SILLS AT 8'-0" OPNGS IN 3-5/8x20GA WALLS
7. S2 MAY BE USED AT 16'-0" OPNGS IN 6" & 8" WALLS (18GA MIN)
8. SEE SHEET S1.6 FOR JAMB, HEADER, AND SILL DETAILS
9. "H4-8" INDICATES HEADER TYPE AND DEPTH OF VERTICAL STUD ELEMENTS INSIDE HEADER. "HC4-8" INDICATES COMPOSITE HEADER W/ ADD'L SCREW REQUIREMENTS - SEE SCHEDULE & 3 SS006
10. FOR CONNECTION @ BASE OF WALL AT JAMBS SEE 2 SS005
11. FOR CONNECTION @ TOP OF WALL AT JAMBS SEE 3 SS005
12. 'W' WIDTH IS THE MAX WIDTH OF A SINGLE OPENING OR THE COMBINED WIDTH OF SIDE BY SIDE OPENINGS THAT SHARE A SINGLE JAMB STUD CONFIGURATION.

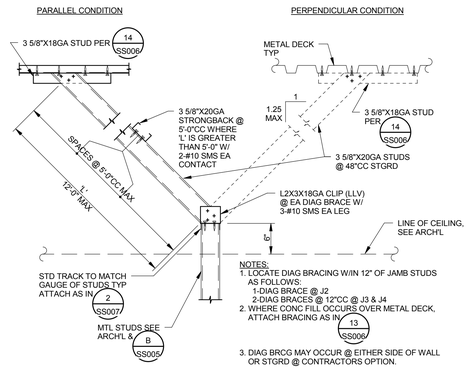

1 SS005 TYPICAL PARTIAL HEIGHT PARTITION WALL BRACING

5425D001-12

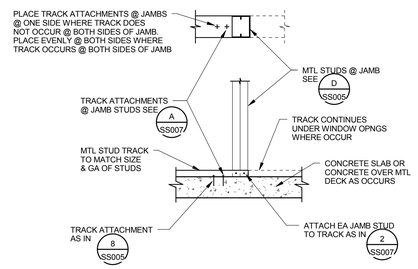

2 SS005 JAMB STUDS @ SILL TRACK

5425D002-12

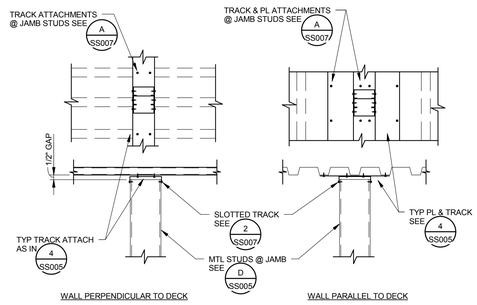

3 SS005 JAMB STUDS @ TOP TRACK

5425D003-12

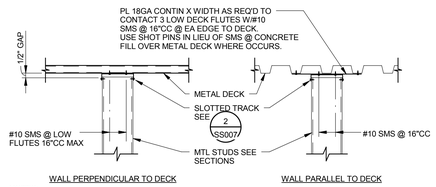

NOTES:

1. WHERE WALL IS PERPENDICULAR TO DECK AND CONCRETE FILL OVER METAL DECK OCCURS ATTACH TRACK TO DECK W/ 1-SHOT PIN W/ STEEL WASHER @ 24"CC MAX IN LIEU OF SMS.
2. WHERE WALL IS PARALLEL TO DECK & WALL CL IS W/IN 1 1/2" OF CL OF LOW DECK FLUTE, TOP TRACK MAY BE ATTACHED DIRECTLY TO DECK AS IN PERPENDICULAR COND & CONTIN E MAY BE OMITTED.
3. SEE SHOT PIN NOTES FOR SPACING, EDGE DISTANCE & PLACEMENT REQUIREMENTS. AT SMS MAINTAIN 1.5 X DIAMETER MIN SPACING & EDGE DISTANCE.
4. FOR COND @ JAMB STUDS SEE 3 SS005

4 SS005 SLIP TRACK TO METAL DECK W/O FIREPROOFING

5425D004-12

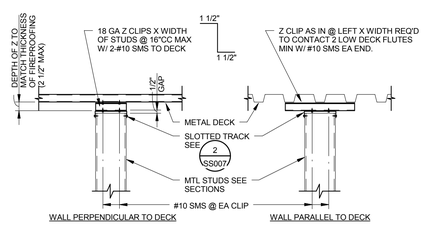

NOTES:

1. WHERE CONC FILL OCCURS OVER METAL DECK, USE SHOT PINS IN LIEU OF SMS.
2. PROVIDE Z CLIPS AS REQ'D FOR FASTENERS @ JAMB STUDS, SEE A SS007

5 SS005 SLIP TRACK TO METAL DECK W/ FIREPROOFING

5425D005-12

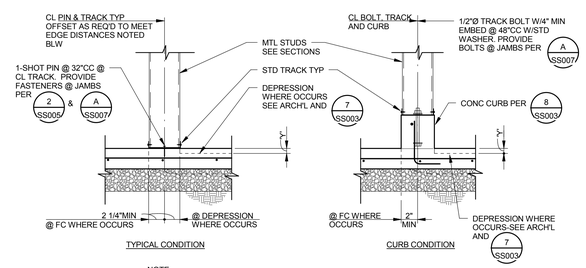

NOTE:
WHERE SLAB DEPRESSION OCCURS, VERIFY DEPTH 'Y', LOCATION & EXTENT W/ ARCH'L. WHERE 'Y' EXCEEDS 2" USE PROVISIONS OF CURB COND.

8 SS005 SILL TRACK TO SLAB

5425D006-12

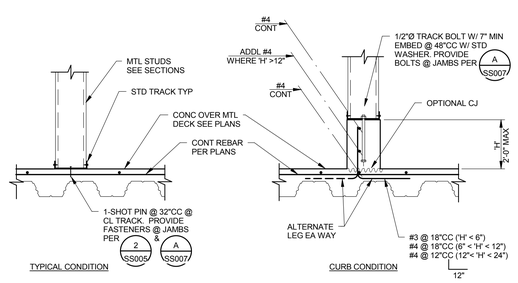

9 SS005 SILL TRACK TO CONCRETE OVER METAL DECK

5425D009-12

FINAL BID DOCUMENTS

HILLIARD ARCHITECTS INC. COPYRIGHT

Revisions:	Date

CONSULTANTS:

Buehler & Buehler Structural Engineers, Inc.
5 Third Street, Suite 3123, San Francisco, CA 94103
tel 415.495.1630 fax 415.495.1639
Sacramento · Phoenix · San Francisco

REGISTERED PROFESSIONAL ENGINEER JOHN D. HARVEY No. 4660 STRUCTURAL STATE OF CALIFORNIA

ARCHITECT/ENGINEERS:

ESTABLISHED 1988 HILLIARD ARCHITECTS GOING GREEN

HILLIARD ARCHITECTS, INC
251 Post Street, Suite 620
San Francisco, CA 94108-5017
Tel 415 989 6400, Fax 415 989 3056
www.HilliardArchitects.com

Drawing Title: **TYPICAL INTERIOR METAL STUD DETAILS**	Project Title: **GENOMICS RESEARCH BUILDING, PALO ALTO**	Project Number: **640-389**	Office of Construction and Facilities Management
Approved: Project Director	Location: VAPAHCS - PALO ALTO	Building Number: **51**	
	Date: **06/02/2014** · Checked: · Drawn: **BBSE**	Drawing Number: **SS005** Dwg. of	Department of Veterans Affairs

VA FORM 08-6231

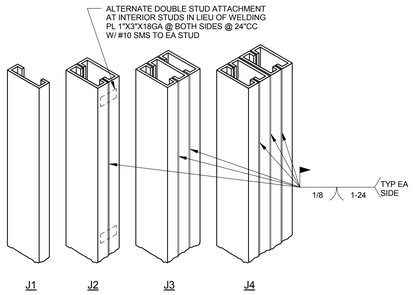

1 SS006 JAMB DETAIL
5405D001-12

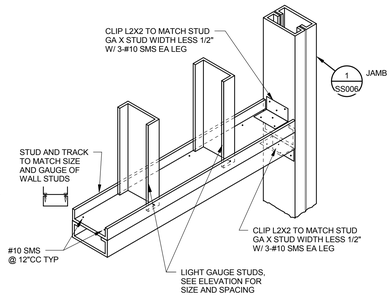

2 SS006 H2 HEADER DETAIL
5405D002-12

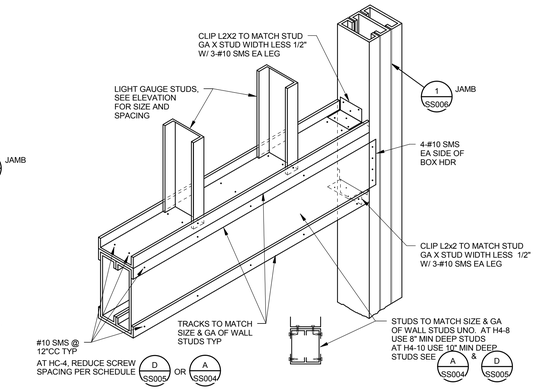

3 SS006 H4/HC-4 HEADER DETAIL
5405D003-12

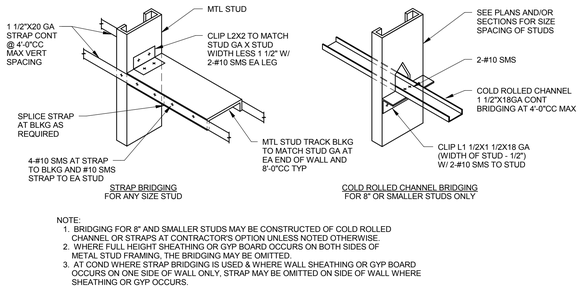

NOTE:
1. BRIDGING FOR 8" AND SMALLER STUDS MAY BE CONSTRUCTED OF COLD ROLLED CHANNEL OR STRAPS AT CONTRACTOR'S OPTION UNLESS NOTED OTHERWISE.
2. WHERE FULL HEIGHT SHEATHING OR GYP BOARD OCCURS ON BOTH SIDES OF METAL STUD FRAMING, THE BRIDGING MAY BE OMITTED.
3. AT COND WHERE STRAP BRIDGING IS USED & WHERE WALL SHEATHING OR GYP BOARD OCCURS ON ONE SIDE OF WALL ONLY, STRAP MAY BE OMITTED ON SIDE OF WALL WHERE SHEATHING OR GYP OCCURS.

4 SS006 TYPICAL STUD BRIDGING
5405D004-12

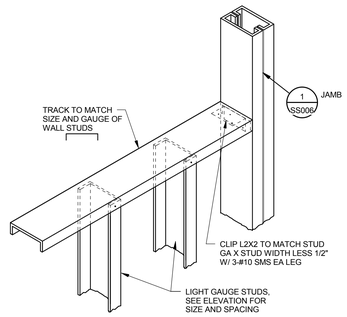

5 SS006 S1 SILL DETAIL
5405D005-12

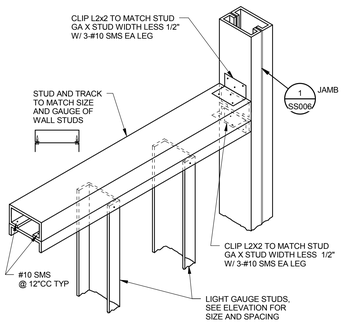

6 SS006 S2 SILL DETAIL
5405D006-12

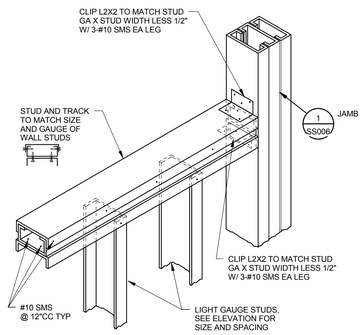

7 SS006 S3 SILL DETAIL
5405D007-12

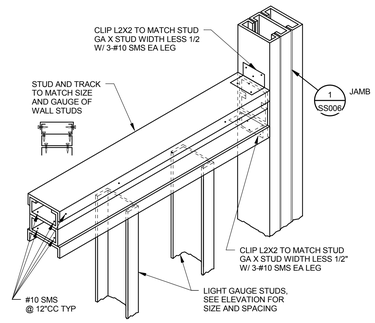

8 SS006 S4 SILL DETAIL
5405D008-12

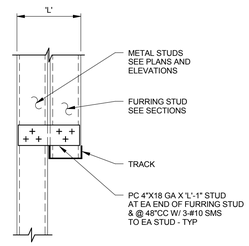

9 SS006 STUD FURRING DETAIL
5405D009-12

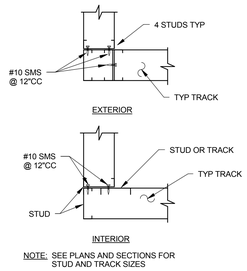

NOTE: SEE PLANS AND SECTIONS FOR STUD AND TRACK SIZES

10 SS006 TYPICAL WALL CORNER
5405D010-12

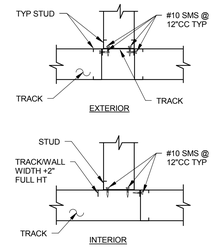

NOTE: SEE PLANS AND SECTIONS FOR STUD AND TRACK SIZES

11 SS006 TYPICAL TEE INTERSECTION
5405D011-12

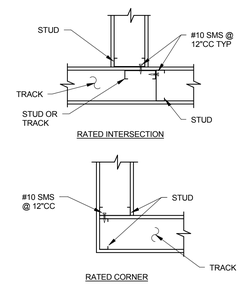

NOTE: SEE PLANS AND SECTIONS FOR STUD AND TRACK SIZES
SEE ARCH'L DRAWINGS FOR WALL FINISH CONSTRUCTION

12 SS006 TYPICAL FIRE RATED WALL CORNERS
5405D012-12

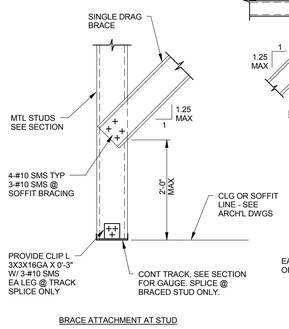

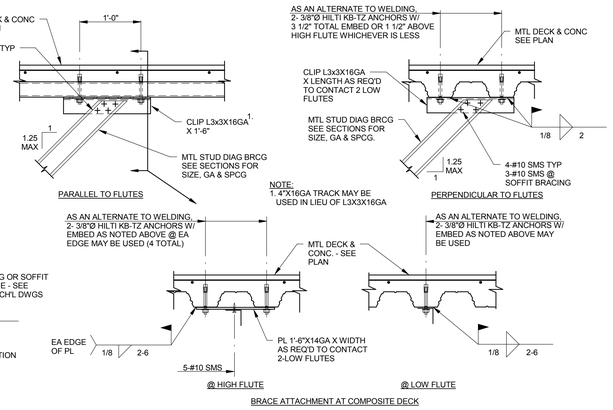

13 SS006 DETAIL
5405D013-12
METAL STUD BRACING CONNECTIONS AT CONC OVER MTL DECK

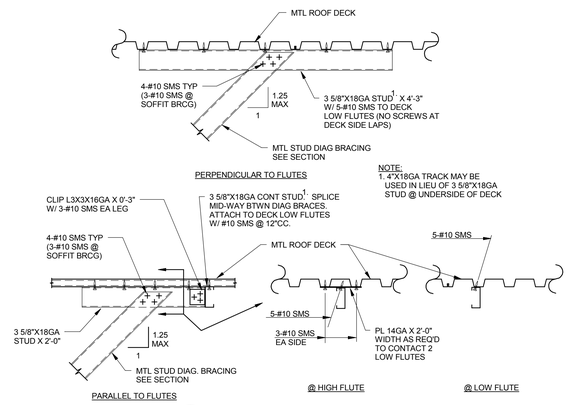

14 SS006 DETAIL
5405D014-12
METAL STUD DIAG BRACING CONNECTIONS @ BARE METAL ROOF DECK CONDITIONS

HILLIARD ARCHITECTS INC. COPYRIGHT

FINAL BID DOCUMENTS

Revisions:	Date

CONSULTANTS:

Buehler & Buehler
Structural Engineers, Inc.
5 Third Street, Suite 1123, San Francisco, CA 94103
tel 415.495.1635 fax 415.495.1639
Sacramento · Phoenix · San Francisco

REGISTERED PROFESSIONAL ENGINEER
JOHN D. HARVEY
No. 4660
STRUCTURAL
STATE OF CALIFORNIA

ARCHITECT/ENGINEERS:

ESTABLISHED 1988 HILLIARD ARCHITECTS GOING GREEN

HILLIARD ARCHITECTS, INC
251 Post Street, Suite 620
San Francisco, CA 94108-5017
Tel 415 989 6400, Fax 415 989 3056
www.HilliardArchitects.com

Drawing Title: **TYPICAL METAL STUD DETAILS**	Project Title: **GENOMICS RESEARCH BUILDING, PALO ALTO**	Project Number: **640-389**	Office of Construction and Facilities Management
Approved: Project Director	Location: VAPAHCS - PALO ALTO	Building Number: **51**	
	Date: **06/02/2014** / Checked / Drawn: **BBSE**	Drawing Number: **SS006**	Department of Veterans Affairs
		Dwg. of	

VA FORM 08-6231

5405D017-1

A/SS007 TRACK ATTACHMENT @ JAMB STUDS

JAMB TYPE	TRACK ATTACHMENT METHOD 1,2		
	SHOT PIN	SMS	1/2"Ø BOLTS
J1	1	1	1
J2	2	2	1
J3	3	3	1
J4	4	4	2

NOTES:
1. SCHEDULE INDICATES TRACK ATTACHMENTS REQUIRED WHERE JAMB STUDS OCCUR. SEE TYPICAL SILL AND TOP TRACK ATTACHMENT DETAILS FOR BASIC ATTACHMENT METHODS (I.E. SHOT PINS, SMS, BOLTS ETC...) & CONDITIONS BEYOND JAMB STUDS.
2. LOCATE ALL REQUIRED ATTACHMENTS AS CLOSE TO JAMB STUDS AS POSSIBLE. MAINTAIN ALL FASTENER SPACING AND EDGE DISTANCE REQUIREMENTS. AT SHOT PINS, SEE TYPICAL NOTES. @ SMS MAINTAIN 1.5XDIAMETER MIN EDGE DISTANCE & SPCG. AT BOLTS SPACE NO CLOSER THAN 12 DIAMETERS AND NO MORE THAN 9" FROM END OF TRACK.

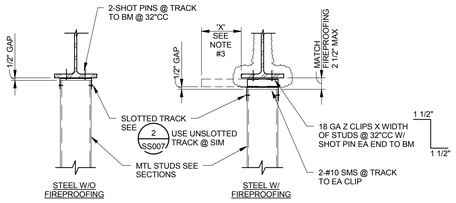

NOTES:
1. PROVIDE Z CLIPS AS REQ'D FOR FASTENERS @ JAMB STUDS SEE A/SS007
2. AT SOFFIT HANGERS, STUDS MAY BE ATTACHED AS SHOWN ABOVE WITH THE FOLLOWING MODIFICATIONS:
   A. USE STD 18 GA DEEP LEG TRACK IN LIEU OF SLIP TRACK. PROVIDE 2-#10 SMS EA SIDE OF HANGER.
   B. WHERE FIREPROOFING OCCURS, USE 14 GA Z CLIPS @ EA HGR. ATTACH TRACK TO CLIPS W/ 3-#10 SMS LOCATED WITHIN 1/2" OF EA EDGE AND AT MIDDLE OF TRACK. ALIGN Z CLIPS W/ HANGERS (±1 1/2").
   C. WHERE NO FIREPROOFING OCCURS, ATTACH TRACK TO BM WITH 2-SHOT PINS @ 16"CC LOCATED WITHIN 1/2" OF EA EDGE OF TRACK. FOR ADDITIONAL INFORMATION @ SUSPENDED SOFFITS SEE 7/SS007
3. STUDS & HGRS MAY BE OFFSET FROM BM FLANGE UP TO 9" @ STUDS & 6" @ HGRS WITH THE FOLLOWING MODIFICATIONS:
   A. AT STUDS, PROVIDE 16GA Z CLIP & 3 SHOT PINS EVENLY SPACED WHERE "X">3".
   B. AT HANGERS, WELD CLIP TO BEAM AS SHOWN, WHERE "X">3".

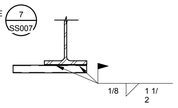

1/SS007 SLIP TRACK TO STEEL BEAM
5425D006-12

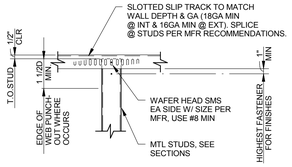

TYP STUD TO SLIP TRACK

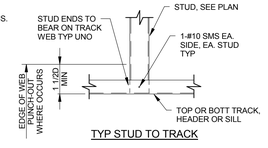

TYP STUD TO TRACK

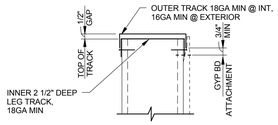

NESTED TRACK ALTERNATE

NOTES:
1. SEE OTHER DETAILS FOR ATTACHMENTS OF T&B TRACK TO STRUCTURE. SCREWS & SHOT PINS @ WEBS OF SLIP TRACKS SHALL BE LOCATED IN SLOTTED HOLES PROVIDED BY MFR.
2. FOR ADD'L INFO @ FIRE RATED WALLS, SEE ARCH'L (FOR WALL TYPE, DETAILS ETC...) & MFR UL LISTING.
3. D = STUD DEPTH
4. WHERE SLOPE OF SUPPORTING STRUCTURE IS GREATER THAN 1:12, A NESTED TRACK ASSEMBLY SHALL BE USED.

2/SS007 TYPICAL STUD TO TRACK CONNECTION
5405D014-12

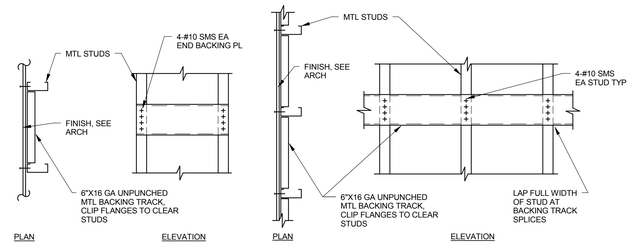

SINGLE BAY CONDITION

CONTINUOUS CONDITION

NOTE: IN LIEU OF TRACK, A 6"X16GA FLAT STRAP MAY BE USED TO SUPPORT LOADS UP TO 20 LBS/FT W A MAX. CONCENTRATED LOAD OF 50 LBS. STRAP SHALL BE CONT OVER 3 STUDS MIN. ATTACH AS NOTED ABOVE.

3/SS007 TYPICAL BACKING DETAIL
5405D013-12

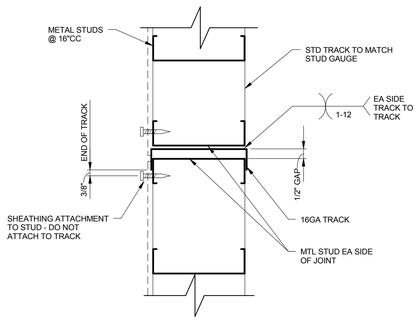

4/SS007 EXPANSION JOINT DETAIL
5415D006

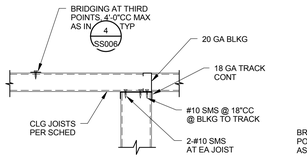

JOIST PERPENDICULAR TO WALL

CEILING JOIST SCHEDULE		
NON-ACCESSIBLE SPAN	ACCESSIBLE SPAN	CEILING JOIST
10'-0" MAX	5'-0" MAX	2 1/2" X 18 GA @ 16"CC
14'-0" MAX	8'-0" MAX	3 5/8" X 18 GA @ 16"CC
19'-0" MAX	10'-0" MAX	6" X 20 GA @ 16"CC
20'-0" MAX	12'-0" MAX	6" X 18 GA @ 16"CC
22'-0" MAX	16'-0" MAX	6" X 16 GA @ 16"CC

1. ALL STUDS & JOISTS ARE 'S' TYPE.
2. WHERE CLG JOISTS ARE SUPPORTED FROM SOFFIT HGRS AS IN 7/SS007 & CLG JOISTS OCCUR @ BOTH SIDES OF HGRS, JOIST SPANS SHALL NOT EXCEED 8'-0". PROVIDE ADD'L LINES OF HGRS AS REQ'D.

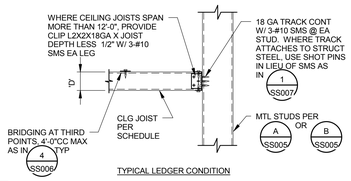

TYPICAL LEDGER CONDITION

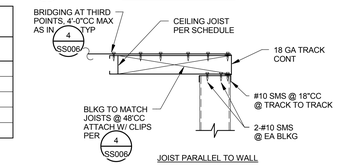

JOIST PARALLEL TO WALL

5/SS007 TYPICAL FRAMED CEILING DETAILS
5425D010-12

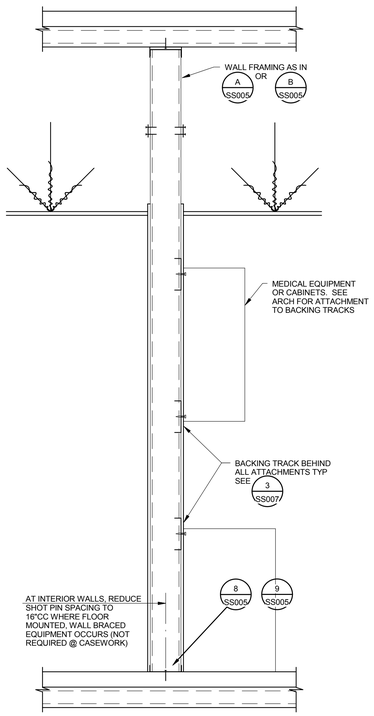

6/SS007 TYPICAL BACKING DETAILS
5405D016-12

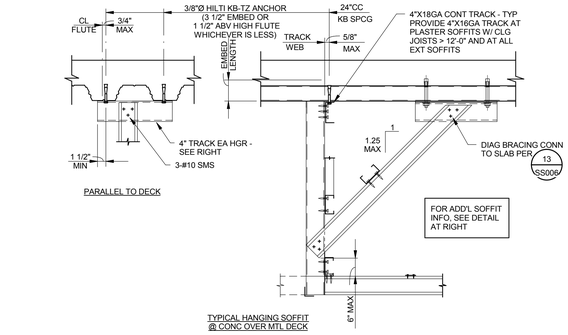

NOTE: FOR COND WHERE SOFFIT HGRS ATTACH TO BOTT OF WF BMS, SEE 1/SS007

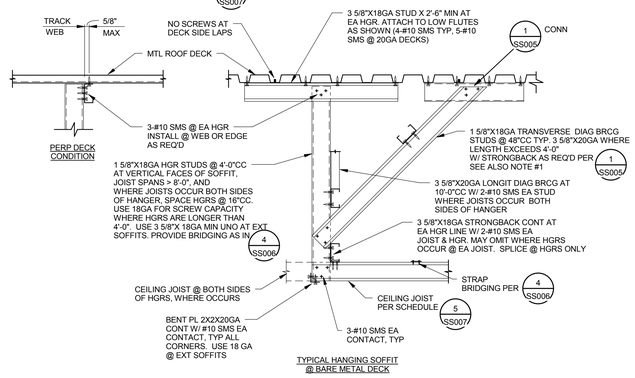

7/SS007 TYPICAL FRAMED SOFFIT DETAILS
5405D015-12

NOTES:
1. TRANSVERSE DIAGONAL SOFFIT BRACING NEED ONLY BE INSTALLED ON ONE LINE OF HGR STUDS WHERE SOFFITS ARE LESS THAN 10'-0" IN WIDTH.
2. FRAME OPENINGS IN VERTICAL FACE OF SOFFITS AS IN B/SS005 D/SS005 MAXIMUM OPENING WIDTH = 4'-0"

HILLIARD ARCHITECTS INC. COPYRIGHT

FINAL BID DOCUMENTS

Revisions: Date

CONSULTANTS:

Buehler & Buehler Structural Engineers, Inc.
5 Third Street, Suite 1123, San Francisco, CA 94103
tel 415.495.1619 fax 415.495.1659
Sacramento . Phoenix . San Francisco

REGISTERED PROFESSIONAL ENGINEER JOHN D. HARVEY No. 4660 STRUCTURAL STATE OF CALIFORNIA

ARCHITECT/ENGINEERS:

ESTABLISHED 1988 HILLIARD ARCHITECTS GOING GREEN

HILLIARD ARCHITECTS, INC
251 Post Street, Suite 620
San Francisco, CA 94108-5017
Tel 415 989 6400, Fax 415 989 3056
www.HilliardArchitects.com

Drawing Title: TYPICAL METAL STUD DETAILS

Approved: Project Director

Project Title: GENOMICS RESEARCH BUILDING, PALO ALTO

Location: VAPAHCS - PALO ALTO

Date: 06/02/2014 | Checked | Drawn: BBSE

Project Number: 640-389

Building Number: 51

Drawing Number: SS007

Dwg. of

Office of Construction and Facilities Management

Department of Veterans Affairs

VA FORM 08-6231

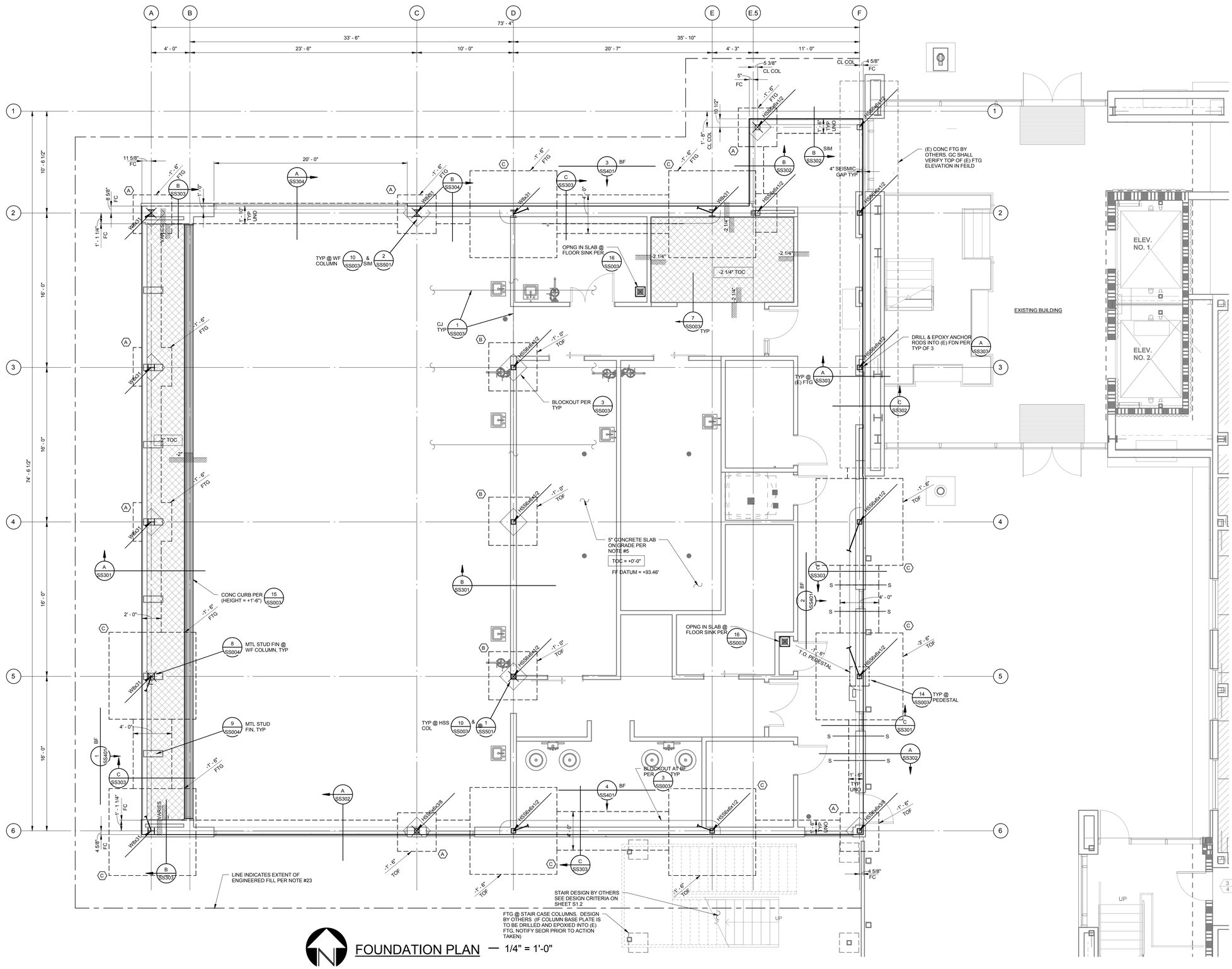

FOUNDATION PLAN — 1/4" = 1'-0"

FOUNDATION PLAN NOTES:

1. SITE PREPARATION AND BUILDING PAD CONSTRUCTION SHALL BE DONE IN ACCORDANCE WITH SOILS REPORT # 750487616 BY LANGAN TREADWELL ROLLO DATED FEBRUARY 18, 2014. BOTTOM OF FOOTING EXCAVATIONS SHALL BE REVIEWED BY GEOTECHNICAL ENGINEER PRIOR TO PLACEMENT OF REINFORCING STEEL. FOUNDATIONS SHALL BEAR ON COMPACTED NON-EXPANSIVE ENGINEERED FILL PER THE REQUIREMENTS OF THE SOILS REPORT.
2. VERIFY ALL BUILDING DIMENSIONS AND ELEVATIONS W/ ARCH'L DRAWINGS. NOTIFY THE ARCHITECT IMMEDIATELY IF THERE ARE ANY CONFLICTS W/ DIMENSIONS SHOWN.
3. DIMENSIONS SHOWN ARE TO CL OF COLUMN UNO.
4. VERIFY ELEVATOR PIT DIMENSIONS W/ ELEVATOR MANUFACTURER PRIOR TO CONSTRUCTION.
5. SLAB ON GRADE SHALL BE 5" THICK CONCRETE W/ #4 @ 18"CC EW AT MID-DEPTH. CONCRETE SHALL BE INSTALLED OVER 2" SAND OVER 15 MIL VAPOR RETARDER OVER OVER 4" CLEAN CRUSHED ROCK. TOP OF CONCRETE SLAB IS +0'-0" UNO. DATUM ELEVATION = +93.46'
6. CONTRACTOR SHALL SUBMIT AN EDGE OF SLAB PLAN TO ARCHITECT & STRUCTURAL ENGINEER FOR REVIEW. SUBMITTAL SHALL BE DIMENSIONED AND LOCATED RELATIVE TO STRUCTURAL GRIDS.
7. PROVIDE 3" MIN. CONCRETE COVER AT STRUCTURAL STEEL AND ANCHOR BOLTS BELOW GRADE TYP.
8. PROVIDE SLAB ON GRADE CONTROL JOINTS (SJ) AS INDICATED PER TYP @ ALL INTERIOR SLABS. CONSTRUCTION JOINTS (CJ) MAY REPLACE CONTROL JOINTS AS REQUIRED. (1 / SS003)
9. SEE SHEETS S1.1 THRU S1.7 FOR GENERAL NOTES & TYPICAL DETAILS WHICH ARE APPLICABLE TO ALL DRAWINGS UNO.
10. IT IS THE CONTRACTOR'S RESPONSIBILITY TO COORDINATE SLAB CONTROL JOINTS WITH ANY ARCHITECTURALLY EXPOSED SLAB AREAS OR THE LOCATION OF TILE CRACK CONTROL JOINTS. VERIFY SPECIAL CONDITION CONTROL JOINTS WITH ARCH'L DRAWINGS.
11. DESIGN, FABRICATION AND INSTALLATION OF MANUFACTURED STAIRS IS BY OTHERS. STAIR DESIGNER TO COORDINATE LOADING OF ADJACENT STRUCTURE W/ SEOR BEFORE COMMENCING DESIGN WORK.
12. CONTRACTOR TO COORDINATE EXACT DIMENSIONS AND LOCATIONS OF THICKENED SLABS, HOUSEKEEPING PADS , ETC. WITH ALL OTHER DISCIPLINES' DWG'S AS WELL AS WITH THE EQUIPMENT PROVIDED PRIOR TO COMMENCING WORK.
13. SEE ARCH'L & CIVIL DRAWINGS FOR ALL EXTERIOR CURBS, FLATWORK, PLANTERS, RAMPS, ETC.
14. CONTINUE ALL REINFORCING IN CONTINUOUS FOOTINGS THROUGH SPREAD FOOTINGS, TYP, UNO.
15. (MK) INDICATES REFERENCE TO FOOTING SCHEDULE, SEE (A / SS101)
    (MK T&B) INDICATES THAT ADDITIONAL TOP REINFORCING AS NOTED IN SCHEDULE SHALL BE PLACED @ 2" CLR OF TOP OF FOOTING.
16. INDICATES CONCRETE CURB. FOR CURBS BELOW NON-STRUCTURAL WALLS, SEE (8 / SS003) VERIFY EXACT EXTENT W/ ARCH'L DWGS.
17. INDICATES SLOPED AND/OR DEPRESSED SLAB. DEPRESS BUILDING PAD AND PROVIDE FULL SLAB AND BASE THICKNESS. WHERE DEPRESSION IS GREATER THAN 2" AND ADJACENT TO BUILDING FOUNDATION ELEMENT IT MAY BE NECESSARY TO STEP FOOTING IN ORDER TO MAINTAIN MINIMUM FOOTING EMBEDMENT PER SECTIONS. CONTRACTOR TO COORDINATE IN FIELD. SEE ALSO (9 / SS003) & (7 / SS003)
18. ALL DEPRESSIONS, SLOPES, CURBS, ETC. ARE SHOWN FOR REFERENCE ONLY. FOR EXACT DEPTHS, SLOPES, EXTENTS, ETC, SEE OTHER DISCIPLINES' DRAWINGS.
19. TEMPORARY LOADS APPLIED DURING CONSTRUCTION HAVE NOT BEEN CONSIDERED IN SLAB ON GRADE DESIGN.
20. -1'-6" TOF — INDICATES TOP OF FOOTING ELEVATION WITH RESPECT TO REFERENCE TOP OF CONCRETE (+0'-0") THE BOTTOM OF ALL FOOTINGS SHALL BE AT LEAST 24" BELOW ADJACENT MINIMUM PREPARED BUILDING PAD ELEVATION (ON ALL SIDES), TYP UNO AND AS SHOWN ON SECTIONS.
21. INDICATES SLAB STEP PER (9 / SS003) & (7 / SS003)
22. S —— S INDICATES FOOTING STEP PER (2 / SS003) STEP LOCATIONS ARE DIAGRAMMATIC ONLY. CONTRACTOR TO COORDINATE IN FIELD. INTENT IS THAT NO TOP OF FTG IS WITHIN 12" OF EXTERIOR FINISH GRADE.
23. INDICATES EDGE OF ENGINEERED FILL AROUND ENTIRE FOUNDATION FOOTPRINT. PREPARE PER RECOMMENDATIONS OF SOILS REPORT.
24. +2'-0" INDICATES TOP OF CONCRETE SLAB ELEVATION RELATIVE TO REFERENCE T.O. CONCRETE +0'-0".
25. HSS6x6x1/2 — INDICATES HSS COLUMN & SIZE. FOR BASE PLATE, SEE (1 / SS501) TYP UNO.
    INDICATES WIDE FLANGE COLUMN, SIZE PER PLAN. FOR BASE PLATE, SEE (10 / SS501) TYP UNO.
26. INDICATES STEEL BRACED FRAME, SEE ELEVATIONS FOR ADDITIONAL INFO.
27. ANCHOR BOLTS AT EXTERIOR NON-SHEARWALLS SHALL BE AS INDICATED ON DETAIL (1 / SS006)
28. FACE OF CONCRETE @ PERIMETER OF BLDG SHALL BE @ FACE OF STUD, TYP UNO.

(A / SS101) FOOTING SCHEDULE

MARK	SIZE	REINFORCING
A	4'-0"SQ X 1'-6" DEEP	4-#5 EW (BOTTOM)
B	5'-0"SQ X 1'-6" DEEP	5-#5 EW (BOTTOM)
C	9'-0"SQ X 4'-0" DEEP	12-#8 EW (BOTTOM) #4 @ 12"CC EA WAY(TOP)

NOTES:
1. REINFORCEMENT TO BE 3" CLEAR FROM BOTTOM OF FOOTING & 2" CLR FROM TOP OF FOOTING AS OCCURS.
2. PROVIDE #4 TIES @ 24"CC EA WAY WHERE REINFORCEMENT IS PLACED @ TOP & BOTTOM OF FOOTING.
3. FOR DETAIL @ FOOTING SEE (10 / SS003)

FINAL BID DOCUMENTS

HILLIARD ARCHITECTS INC. COPYRIGHT

Revisions:	Date

CONSULTANTS:

Buehler & Buehler Structural Engineers, Inc.
3 Third Street, Suite 1125, San Francisco, CA 94103
tel 415.495.1635 fax 415.495.1639
Sacramento . Phoenix . San Francisco

REGISTERED PROFESSIONAL ENGINEER — JOHN D. HARVEY No. 4660 — STRUCTURAL — STATE OF CALIFORNIA

ARCHITECT/ENGINEERS:

ESTABLISHED 1988 HILLIARD ARCHITECTS GOING GREEN

HILLIARD ARCHITECTS, INC
251 Post Street, Suite 620
San Francisco, CA 94108-5017
Tel 415 989 6400, Fax 415 989 3056
www.HilliardArchitects.com

Drawing Title: **FOUNDATION PLAN**

Approved: Project Director

Project Title: **GENOMICS RESEARCH BUILDING, PALO ALTO**

Location: VAPAHCS - PALO ALTO

Date: **06/02/2014** | Checked | Drawn: **BBSE**

Project Number: **640-389**

Building Number: **51**

Drawing Number: **SS101**

Dwg. of

Office of Construction and Facilities Management

Department of Veterans Affairs

VA FORM 08-6231

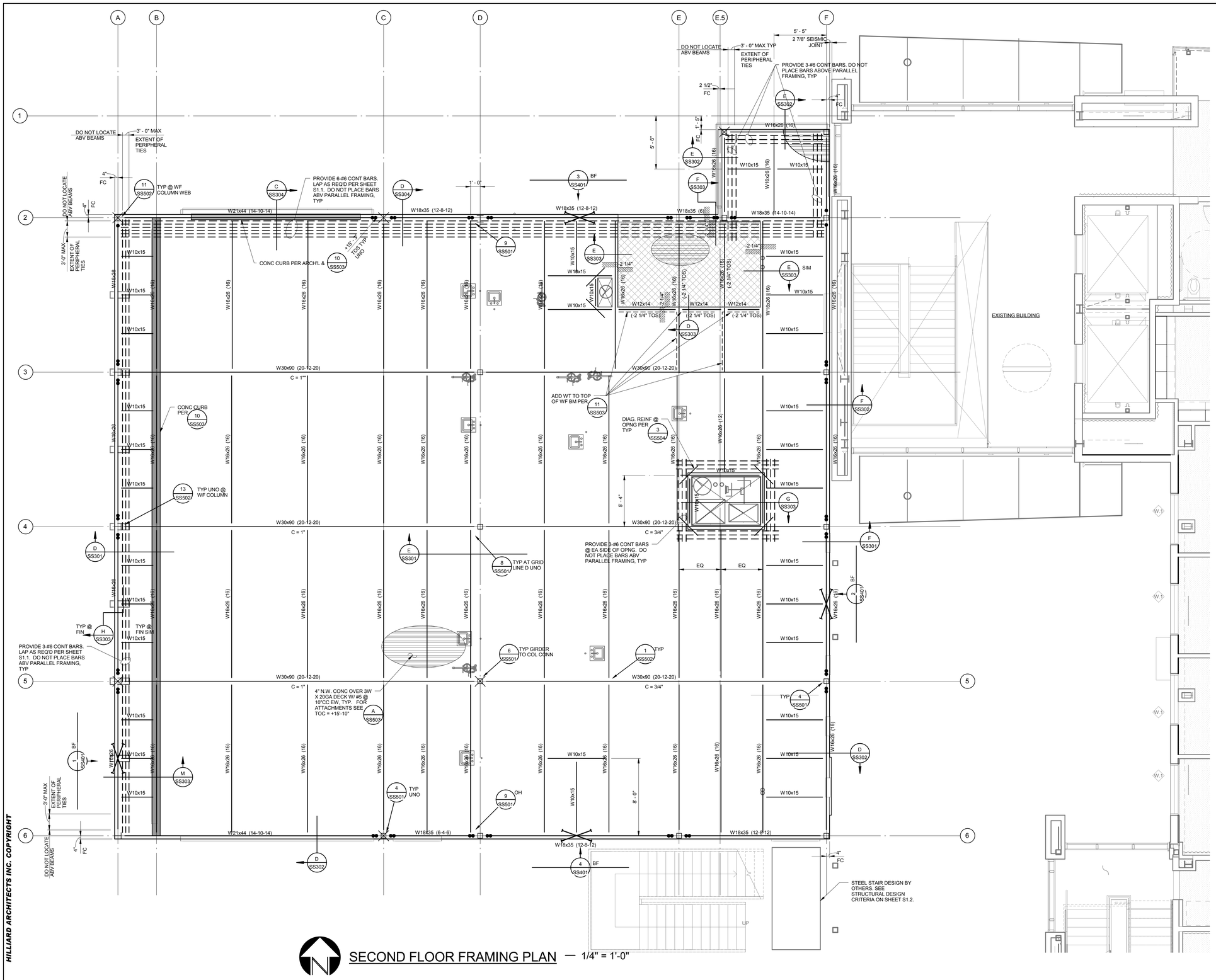

SECOND FLOOR FRAMING PLAN — 1/4" = 1'-0"

FLOOR FRAMING PLAN NOTES:

1. VERIFY ALL BUILDING DIMENSIONS AND ELEVATIONS W/ ARCH'L DRAWINGS. NOTIFY THE ARCHITECT IMMEDIATELY IF THERE ARE ANY CONFLICTS W/ DIMENSIONS SHOWN.
2. DIMENSIONS SHOWN ARE TO CL, UNO.
3. SEE SHEETS S1.1 THRU S1.7 FOR GENERAL NOTES & TYPICAL DETAILS WHICH ARE APPLICABLE TO ALL DRAWINGS UNO.
4. FOR CONNECTION OF ELEVATOR GUIDE RAIL SUPPORT FRAMING TO STRUCTURE SEE D/SS005. CONTRACTOR TO COORD LOCATION WITH ELEVATOR INSTALLER.
5. DESIGN, FABRICATION AND INSTALLATION OF MANUFACTURED STAIRS IS BY OTHERS. STAIR DESIGNER TO COORDINATE LOADING OF ADJACENT STRUCTURE W/ SEOR BEFORE COMMENCING DESIGN WORK. FOR ADDITIONAL INFORMATION SEE STAIR NOTES AT SHEET S1.1.
6. SEPARATION JOINT DIMENSIONS SHOWN ON PLAN INDICATES MINIMUM CLEAR DISTANCE REQUIRED BTWN ADJACENT BLDG ELEMENTS. WHERE BLDG FINISHES/FIRE PROTECTION OCCUR, DIMENSION SHALL BE MAINTAINED BTWN THOSE ELEMENTS.
7. SEE SHEETS S5.1-S5.2 FOR TYPICAL STEEL DETAILS.
8. SEE SHEET S5.3 FOR TYPICAL CONCRETE OVER METAL DECK DETAILS.
9. +15'-0" TOS — INDICATES ELEVATION OF TOP OF STEEL FRAMING AND BOTTOM OF METAL DECK.
10. INDICATES CONC OVER METAL DECK OR BARE METAL DECK. ORIENTATION AS SHOWN ON PLAN. PROVIDE DECK WELDING TO ALL BEAMS PER B/SS503. CONTRACTOR SHALL PROVIDED DECK SHORING AS REQ'D.
11. CONCRETE OVER METAL DECK CONSTRUCTION SHALL BE 3"X20GA TYPE 3W STEEL FLOOR DECK (TWO SPAN MINIMUM WITHOUT SHORING) WITH MIN 4" NW CONCRETE. REINFORCE CONCRETE WITH #3 @ 18"CC EACH WAY.
12. THE MINIMUM THICKNESS OF CONCRETE OVER METAL DECK SHALL BE AS SPECIFIED ON PLAN. NOTE THAT THE CONCRETE DEPTH WILL VARY DUE TO DECK AND BEAM DEFLECTIONS DURING CONCRETE PLACEMENT, AND SHALL BE CONSIDERED IN THE ESTIMATING OF CONCRETE VOLUME, COST AND PLACEMENT STRATEGIES. SEE SPEC SECTION 053000 SUBSECTIONS 1.4.A.5 AND 2.1.K FOR ADDITIONAL REQUIREMENTS RELATED TO CONCRETE PLACEMENT. FOR ADDITIONAL INFORMATION SEE 13/SS503.
13. SEE ARCH'L DWGS FOR LOCATION OF ALL SLAB EDGES AT FLOOR PERIMETER AND AROUND OPENINGS. WHERE NOT SHOWN OR INDICATED OTHERWISE ON STRUCTURAL OR ARCH'L DWGS, BEAMS ADJACENT TO SLAB EDGES SHALL BE 8" FROM CL OF BEAM TO EDGE OF SLAB.
14. NO MECH'L, ELEC'L, PLUMBING OR OTHER NON-STRUCTURAL ITEMS SHALL BE PLACED IN CONCRETE OVER METAL DECK.
15. CONTRACTOR SHALL SUBMIT AN EDGE OF SLAB PLAN TO ARCHITECT & STRUCTURAL ENGINEER FOR REVIEW. SUBMITTAL SHALL BE DIMENSIONED AND LOCATED RELATIVE TO STRUCTURAL GRIDS.
16. W18x35 (32) C=1" — INDICATES BEAM SIZE, NUMBER OF 3/4"Ø WELDED HEADED STUDS, AND UPWARD CAMBER (WHERE NO CAMBER IS SPECIFIED FABRICATE WITH NATURAL MILL CAMBER UP). PROVIDE 3/4"Ø STUDS @ 24"CC MIN AT ALL BEAMS THAT RECEIVE MTL DECK AND CONCRETE, TYP. PROVIDE SPACING OF STUDS AT 12"CC AT ALL BEAMS W/ CONNECTIONS INDICATED AS (▶— ● ●● ◆) UNLESS MORE STRINGENT REQUIREMENT IS NOTED ON PLANS.
17. ALL BEAMS SHALL BE EQUALLY SPACED BETWEEN DIMENSIONED COLUMNS, GRIDS, OR BEAMS WHERE OCCURS, TYP UNO.
18. FOR TYPICAL BEAM TO BEAM CONNECTION, SEE 1/SS502 OR 2/SS502 UNO.
19. FOR TYPICAL BEAM TO COLUMN CONNECTION, SEE 6/SS501.
20. ● INDICATES SINGLE ROW 'SLIP-CRITICAL' BOLTED CONNECTION PER 4/SS501 4/SS502
21. ●● INDICATES DOUBLE ROW 'SLIP-CRITICAL' BOLTED CONNECTION PER 4/SS501 4/SS502
22. ALL WELDS AT CONNECTIONS INDICATED AS (▶— ● ●● ◆) SHALL BE MADE W/ FILLER METALS IN ACCORDANCE W/ AISC 341 SECTION 7.3A. FOR DEMAND CRITICAL WELD REQUIREMENTS, SEE NOTES ON FRAME DETAIL SHEET S5.1.
23. INDICATES WIDE FLANGE COLUMN. SIZE INDICATED @ BASE LEVEL OF COLUMN ONLY.
24. INDICATES HSS COLUMN. SIZE INDICATED @ BASE LEVEL OF COLUMN ONLY.
25. INDICATES STEEL BRACED FRAME. SEE ELEVATIONS FOR ADD'L INFO. SEE PLAN AND ELEVATION FOR CONFIGURATION.
26. VERIFY ALL FLOOR OPENINGS, LOCATIONS & DIMENSIONS WITH ARCH'L DWGS PRIOR TO FABRICATION AND DETAILING. ALL FLOOR OPENINGS SHALL BE REINFORCED AS SHOWN ON TYPICAL METAL DECK SHEET S5.4. ADD'L WF BLKG MAY BE REQ'D @ FLOOR OPNGS AS SHOWN ON PLAN OR WHERE OPNGS EXCEED PROVISIONS OF TYPICAL DETAILS.
27. CONTRACTOR TO COORDINATE EXACT LOCATION OF FRAMING MEMBERS SUPPORTING MECHANICAL UNITS & SIMILAR ITEMS NOT DIMENSIONED ON PLAN.
28. AHU 1A — INDICATES MECHANICAL UNIT. ALL BLOCKING BEAMS SHALL BE W10x15 UNO AND SHALL BE LOCATED DIRECTLY BELOW UNIT EDGES AND/OR CURBS. SEE MECHANICAL UNIT SCHEDULE FOR WEIGHTS AND ATTACHMENT OF UNIT/CURBS TO STRUCTURE.
29. DASHED LINE INDICATES BOTTOM FLANGE BRACE. ARROW INDICATES LOW END, SEE 6/SS502. INTENT IS THAT BRACES ARE EQUALLY SPACED BTWN ADJACENT GIRDERS OR BEAMS, UNO ON PLAN.
    SOLID LINE INDICATES BOTTOM FLANGE BRACING. SEE 5/SS502.
30. INDICATES SLOPE AND/OR DEPRESSION IN CONCRETE OVER METAL DECK - SEE PLAN FOR DEPTH OF DEPRESSION. SEE ARCH'L DWGS FOR EXACT LOCATION AND EXTENT. DEPRESS FLOOR SLAB PER 9/SS504.
31. INDICATES CONCRETE CURB. SEE 10/SS503.
32. ALL VISUALLY EXPOSED STEEL SHALL MEET 'ARCHITECTURALLY EXPOSED STRUCTURAL STEEL' REQUIREMENTS. SEE ARCH'L DWGS AND SPECS.

FINAL BID DOCUMENTS

HILLIARD ARCHITECTS INC. COPYRIGHT

Revisions:	Date

CONSULTANTS:

Buehler & Buehler Structural Engineers, Inc.
5 Third Street, Suite 1123, San Francisco, CA 94103
tel 415.495.1635 fax 415.495.1639
Sacramento · Phoenix · San Francisco

REGISTERED PROFESSIONAL ENGINEER — JOHN D. HARVEY No. 4660 — STRUCTURAL — STATE OF CALIFORNIA

ARCHITECT/ENGINEERS:

ESTABLISHED 1988 HILLIARD ARCHITECTS GOING GREEN
HILLIARD ARCHITECTS, INC
251 Post Street, Suite 620
San Francisco, CA 94108-5017
Tel 415 989 6400, Fax 415 989 3056
www.HilliardArchitects.com

Drawing Title	SECOND FLOOR FRAMING PLAN
Approved: Project Director	
Project Title	GENOMICS RESEARCH BUILDING, PALO ALTO
Location	VAPAHCS - PALO ALTO
Date	06/02/2014
Checked	
Drawn	BBSE
Project Number	640-389
Building Number	51
Drawing Number	SS102
Dwg. of	

Office of Construction and Facilities Management
Department of Veterans Affairs

VA FORM 08-6231

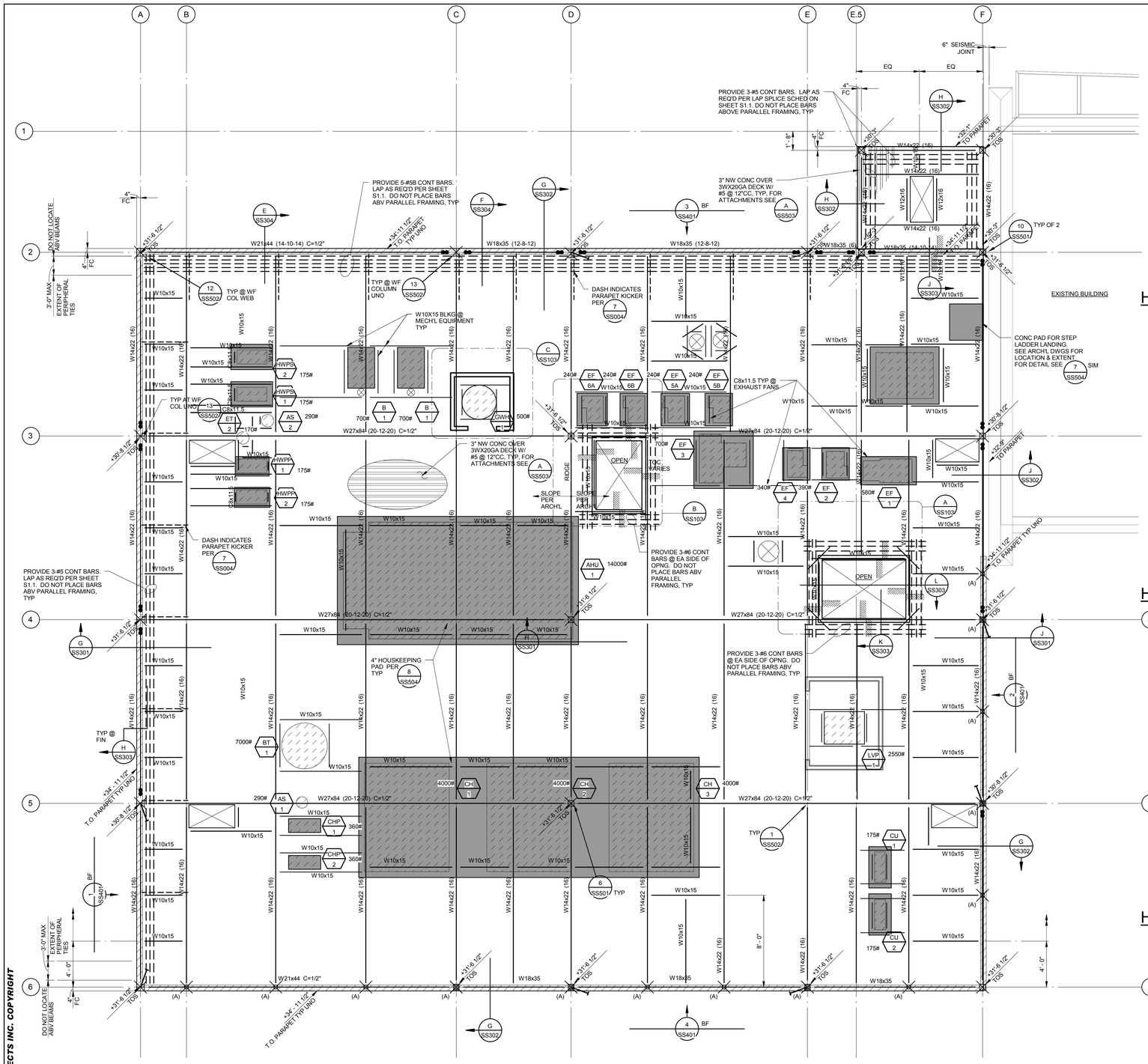

HIGH ROOF PLAN DETAIL (A/SS103) — 1/4" = 1'-0"

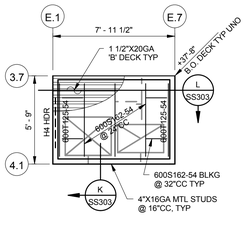

HIGH ROOF PLAN DETAIL (B/SS103) — 1/4" = 1'-0"

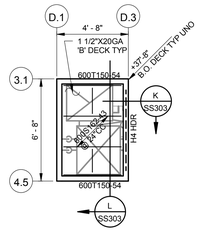

HIGH ROOF PLAN DETAIL (C/SS103) — 1/4" = 1'-0"

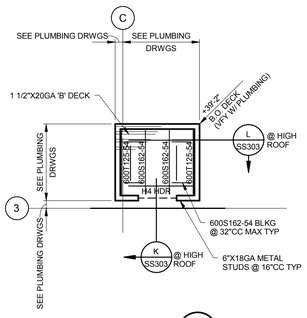

ROOF FRAMING PLAN — 1/4" = 1'-0"

ROOF FRAMING PLAN NOTES:

1. VERIFY ALL BUILDING DIMENSIONS AND ELEVATIONS W/ ARCH'L DRAWINGS. NOTIFY THE ARCHITECT IMMEDIATELY IF THERE ARE ANY CONFLICTS W/ DIMENSIONS SHOWN.
2. DIMENSIONS SHOWN ARE TO CL OF COLUMN, UNO.
3. SEE SHEETS S1.1 THRU S1.7 FOR GENERAL NOTES & TYPICAL DETAILS WHICH ARE APPLICABLE TO ALL DRAWINGS UNO.
4. (A) OR (B) — INDICATES COLUMN IS ABOVE ONLY (A) OR BELOW ONLY (B). NO SYMBOL INDICATES THAT COL IS ABOVE AND BELOW.
5. DESIGN, FABRICATION AND INSTALLATION OF MANUFACTURED STAIRS IS BY OTHERS. STAIR DESIGNER TO COORDINATE LOADING OF ADJACENT STRUCTURE W/ SEOR BEFORE COMMENCING DESIGN WORK. FOR ADDITIONAL INFORMATION SEE STAIR NOTES AT SHEET S1.1.
6. SEPARATION JOINT DIMENSIONS SHOWN ON PLAN INDICATES MINIMUM CLEAR DISTANCE REQUIRED BTWN ADJACENT BLDG ELEMENTS. WHERE BLDG FINISHES/FIRE PROTECTION OCCUR, DIMENSION SHALL BE MAINTAINED BTWN THOSE ELEMENTS.
7. SEE SHEETS S5.1-S5.2 FOR TYPICAL STEEL DETAILS.
8. SEE SHEET S5.3 FOR TYPICAL CONCRETE OVER METAL DECK DETAILS.
9. +18'-0" TOS — INDICATES ELEVATION OF TOP OF STEEL FRAMING AND BOTTOM OF METAL DECK.
10. INDICATES CONC OVER METAL DECK OR BARE METAL DECK. ORIENTATION AS SHOWN ON PLAN. PROVIDE DECK WELDING TO ALL BEAMS PER (B/SS501)
11. CONCRETE OVER METAL DECK CONSTRUCTION SHALL BE 3"X20GA TYPE 3W STEEL ROOF DECK (TWO SPAN MINIMUM WITHOUT SHORING) WITH MIN 3 1/4" LW CONCRETE. REINFORCE CONCRETE WITH #3 @ 18"CC EACH WAY.
12. SEE ARCH'L DWGS FOR LOCATION OF ALL SLAB EDGES AT ROOF PERIMETER AND AROUND OPENINGS. WHERE NOT SHOWN OR INDICATED OTHERWISE ON STRUCTURAL OR ARCH'L DWGS, BEAMS ADJACENT TO SLAB EDGES SHALL BE 8" FROM CL OF BEAM TO EDGE OF SLAB.
13. NO MECH'L, ELEC'L, PLUMBING OR OTHER NON-STRUCTURAL ITEMS SHALL BE PLACED IN CONCRETE OVER METAL DECK.
14. CONTRACTOR SHALL SUBMIT AN EDGE OF SLAB PLAN TO ARCHITECT & STRUCTURAL ENGINEER FOR REVIEW. SUBMITTAL SHALL BE DIMENSIONED AND LOCATED RELATIVE TO STRUCTURAL GRIDS.
15. W18x35 (32) C=1" — INDICATES BEAM SIZE, NUMBER OF 3/4"Ø WELDED HEADED STUDS, AND UPWARD CAMBER (WHERE NO CAMBER IS SPECIFIED FABRICATE WITH NATURAL MILL CAMBER UP). PROVIDE 3/4"Ø STUDS @ 24"CC MIN AT ALL BEAMS THAT RECEIVE MTL DECK AND CONCRETE. TYP. PROVIDE SPACING OF STUDS AT 12"CC AT ALL BEAMS W/ CONNECTIONS INDICATED AS (● ●● ◆) UNLESS MORE STRINGENT REQUIREMENT IS NOTED ON PLANS.
16. ALL BEAMS SHALL BE EQUALLY SPACED BETWEEN DIMENSIONED COLUMNS, GRIDS, OR BEAMS WHERE OCCURS, TYP UNO.
17. FOR TYPICAL BEAM TO BEAM CONNECTION, SEE (1/SS502) OR (2/SS502) UNO.
18. FOR TYPICAL BEAM TO COLUMN CONNECTION, SEE OR (6/SS501)
19. ● INDICATES SINGLE ROW 'SLIP-CRITICAL' BOLTED CONNECTION PER (4/SS501) OR (4/SS502).
20. ●● INDICATES DOUBLE ROW 'SLIP-CRITICAL' BOLTED CONNECTION PER (4/SS501) OR (4/SS502).
21. ALL WELDS AT CONNECTIONS INDICATED AS (● ●● ◆) SHALL BE MADE W/ FILLER METALS IN ACCORDANCE W/ AISC 341 SECTION 7.3A. FOR DEMAND CRITICAL WELD REQUIREMENTS, SEE NOTES ON FRAME DETAIL SHEET S5.1.
22. INDICATES WIDE FLANGE COLUMN. SIZE INDICATED @ BASE LEVEL OF COLUMN ONLY.
23. INDICATES HSS COLUMN. SIZE INDICATED @ BASE LEVEL OF COLUMN ONLY.
24. INDICATES STEEL BRACED FRAME. SEE ELEVATIONS FOR ADD'L INFO. SEE PLAN AND ELEVATION FOR CONFIGURATION.
25. VERIFY ALL ROOF OPENINGS, LOCATIONS & DIMENSIONS WITH ARCH'L DWGS PRIOR TO FABRICATION AND DETAILING. ALL ROOF OPENINGS SHALL BE REINFORCED AS SHOWN ON TYPICAL METAL DECK SHEET S5.4. ADD'L WF BLKG MAY BE REQ'D @ ROOF OPNGS AS SHOWN ON PLAN OR WHERE OPNGS EXCEED PROVISIONS OF TYPICAL DETAILS.
26. CONTRACTOR TO COORDINATE EXACT LOCATION OF FRAMING MEMBERS SUPPORTING MECHANICAL UNITS & SIMILAR ITEMS NOT DIMENSIONED ON PLAN.
27. (AHU/1A) — INDICATES MECHANICAL UNIT. ALL BLOCKING BEAMS SHALL BE W10x12 UNO AND SHALL BE LOCATED DIRECTLY BELOW UNIT EDGES AND/OR CURBS, SEE MECHANICAL UNIT SCHEDULE FOR WEIGHTS AND ATTACHMENT OF UNIT/CURBS TO STRUCTURE.
28. DASHED LINE INDICATES BOTTOM FLANGE BRACE. ARROW INDICATES LOW END, SEE (6/SS502). INTENT IS THAT BRACES ARE EQUALLY SPACED BTWN ADJACENT GIRDERS OR BEAMS, UNO ON PLAN.
    SOLID LINE INDICATES BOTTOM FLANGE BRACING. SEE (5/SS502).
29. ALL VISUALLY EXPOSED STEEL SHALL MEET 'ARCHITECTURALLY EXPOSED STRUCTURAL STEEL' REQUIREMENTS. SEE ARCH'L DWGS AND SPECS.
30. INDICATES MTL STUD PARAPET ABV ROOF W/ 6"X18GA STUDS @ 16"CC. PROVIDE RICKETS WHERE INDICATED ON PLAN. COORD PARAPET HEIGHT & EXTENT OF ARCH'L DWGS, TYP.
31. INDICATES PARAPET KICKERS PER (7/SS004) TYP
32. INDICATES CONCRETE EQUIPMENT PAD @ MECH'L UNIT. SEE DETAIL (8/SS504)
33. (A) — INDICATES HSS4x4 IN PARAPET KICKER PER (10/SS504) TYP. LOCATE HSS4X4 ABOVE EACH HSS COL BELOW TYP

HILLIARD ARCHITECTS INC. COPYRIGHT

FINAL BID DOCUMENTS

Revisions:	Date

CONSULTANTS:

Buehler & Buehler Structural Engineers, Inc.
5 Third Street, Suite 1123, San Francisco, CA 94103
tel 415.495.1635 fax 415.495.1639
Sacramento · Phoenix · San Francisco

REGISTERED PROFESSIONAL ENGINEER — JOHN D. HARVEY No. 4660 — STRUCTURAL — STATE OF CALIFORNIA

ARCHITECT/ENGINEERS:

ESTABLISHED 1988 HILLIARD ARCHITECTS GOING GREEN

HILLIARD ARCHITECTS, INC
251 Post Street, Suite 620
San Francisco, CA 94108-5017
Tel 415 989 6400, Fax 415 989 3056
www.HilliardArchitects.com

Drawing Title: **ROOF FRAMING PLAN**	Project Title: **GENOMICS RESEARCH BUILDING, PALO ALTO**	Project Number: **640-389**	Office of Construction and Facilities Management
Approved: Project Director	Location: VAPAHCS - PALO ALTO	Building Number: **51**	
	Date: **06/02/2014** · Checked: · Drawn: **BBSE**	Drawing Number: **SS103** Dwg. of	Department of Veterans Affairs

VA FORM 08-6231

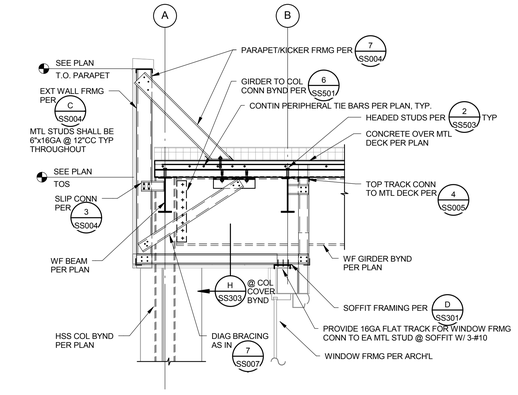

SECTION G SS301 — 1/2" = 1'-0"

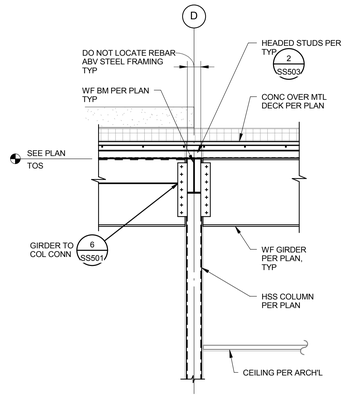

SECTION H SS301 — 1/2" = 1'-0"

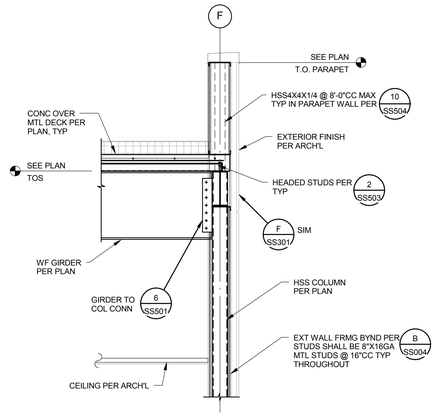

SECTION J SS301 — 1/2" = 1'-0"

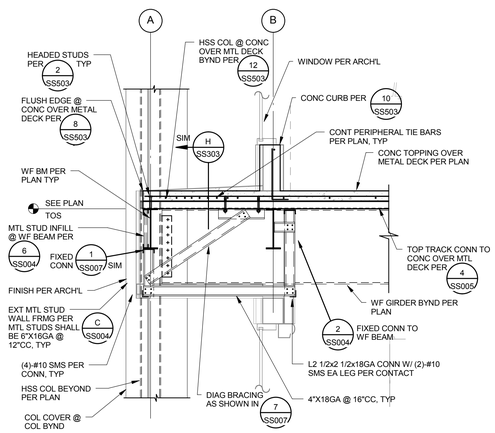

SECTION D SS301 — 1/2" = 1'-0"

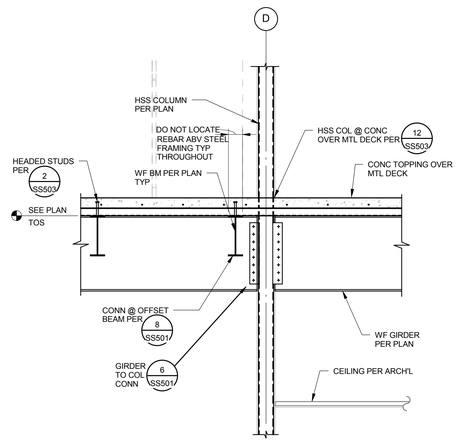

SECTION E SS301 — 1/2" = 1'-0"

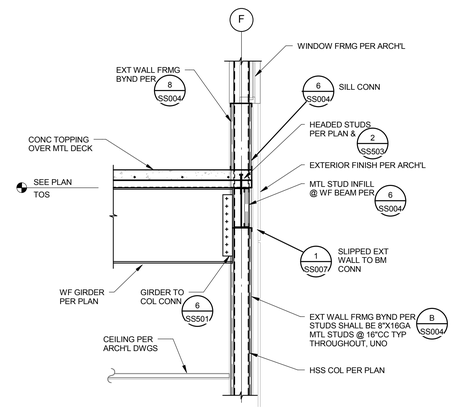

SECTION F SS301 — 1/2" = 1'-0"

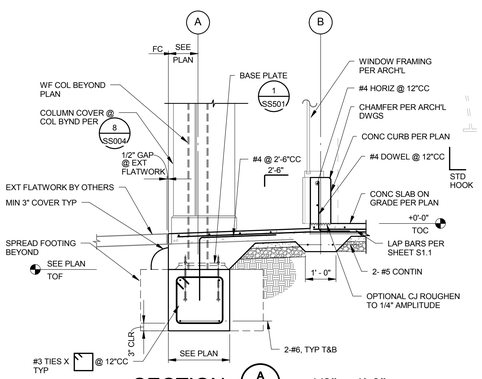

SECTION A SS301 — 1/2" = 1'-0"

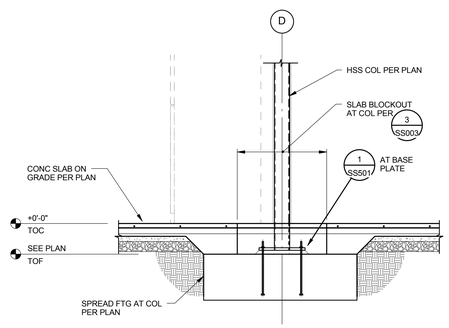

SECTION B SS301 — 1/2" = 1'-0"

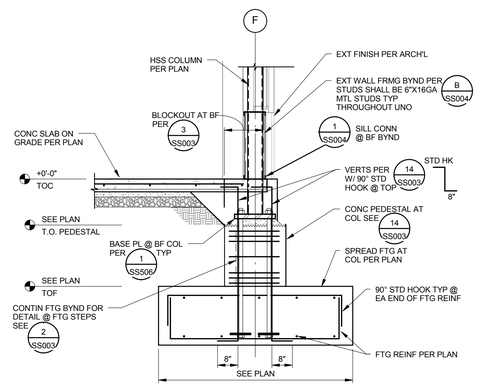

SECTION C SS301 — 1/2" = 1'-0"

FINAL BID DOCUMENTS

HILLIARD ARCHITECTS INC. COPYRIGHT

Revisions:	Date

CONSULTANTS:

Buehler & Buehler Structural Engineers, Inc.
5 Third Street, Suite 1123, San Francisco, CA 94103
tel 415.495.1635 fax 415.495.1639
Sacramento · Phoenix · San Francisco

REGISTERED PROFESSIONAL ENGINEER — JOHN D. HARVEY No. 4660 — STRUCTURAL — STATE OF CALIFORNIA

ARCHITECT/ENGINEERS:

ESTABLISHED 1988 HILLIARD ARCHITECTS GOING GREEN

HILLIARD ARCHITECTS, INC
251 Post Street, Suite 620
San Francisco, CA 94108-5017
Tel 415 989 6400, Fax 415 989 3056
www.HilliardArchitects.com

Drawing Title: **SECTIONS**

Approved: Project Director

Project Title: **GENOMICS RESEARCH BUILDING, PALO ALTO**

Location: VAPAHCS - PALO ALTO

Date: **06/02/2014** | Checked | Drawn: **BBSE**

Project Number: **640-389**

Building Number: **51**

Drawing Number: **SS301**

Dwg. of

Office of Construction and Facilities Management

Department of Veterans Affairs

VA FORM 08-6231

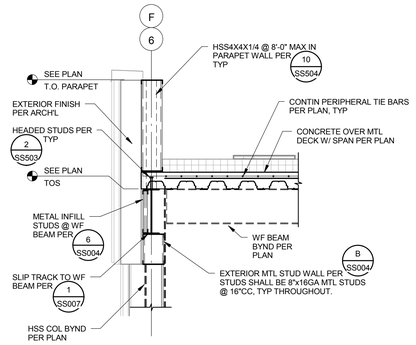

SECTION G SS302 — 1/2" = 1'-0"

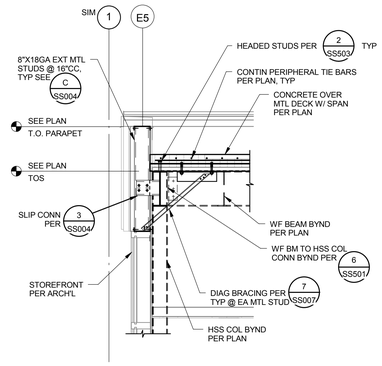

SECTION H SS302 — 1/2" = 1'-0"

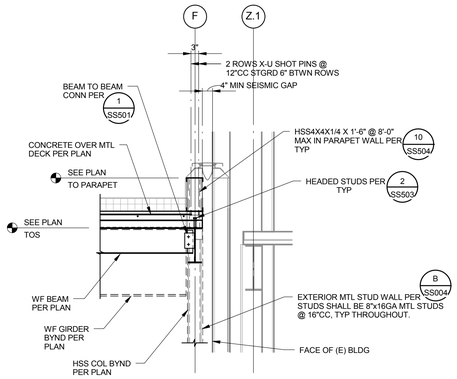

SECTION J SS302 — 1/2" = 1'-0"

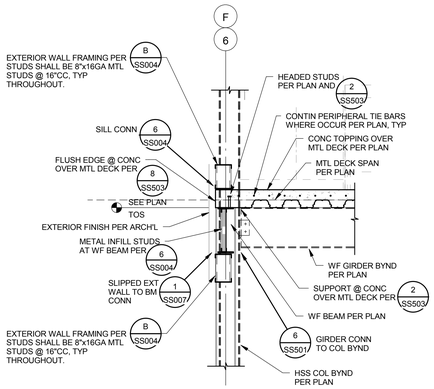

SECTION D SS302 — 1/2" = 1'-0"

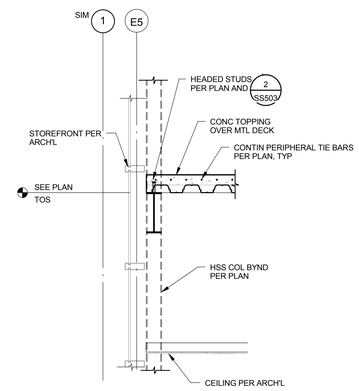

SECTION E SS302 — 1/2" = 1'-0"

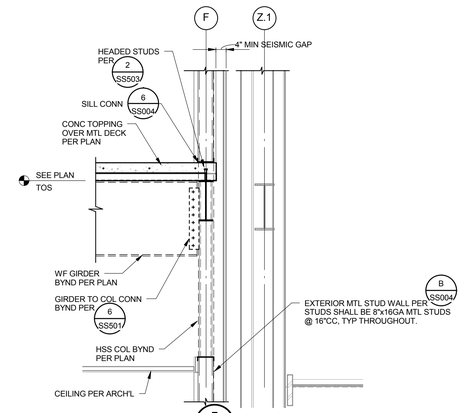

SECTION F SS302 — 1/2" = 1'-0"

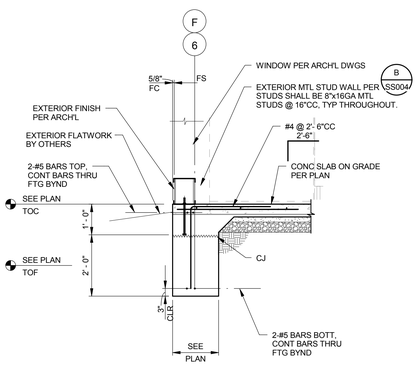

SECTION A SS302 — 1/2" = 1'-0"

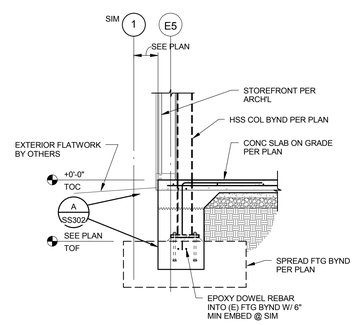

SECTION B SS302 — 1/2" = 1'-0"

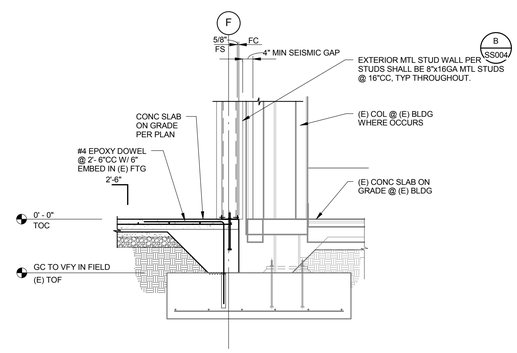

SECTION C SS302 — 1/2" = 1'-0"

FINAL BID DOCUMENTS

HILLIARD ARCHITECTS INC. COPYRIGHT

Revisions:	Date

CONSULTANTS:

Buehler & Buehler Structural Engineers, Inc.
5 Third Street, Suite 1125, San Francisco, CA 94103
tel 415 495 1635 fax 415 495 1639
Sacramento · Phoenix . San Francisco

REGISTERED PROFESSIONAL ENGINEER — JOHN D. HARVEY No. 4660 — STRUCTURAL — STATE OF CALIFORNIA

ARCHITECT/ENGINEERS:

ESTABLISHED 1988 HILLIARD ARCHITECTS GOING GREEN

HILLIARD ARCHITECTS, INC
251 Post Street, Suite 620
San Francisco, CA 94108-5017
Tel 415 989 6400, Fax 415 989 3056
www.HilliardArchitects.com

Drawing Title: **SECTIONS**	Project Title: **GENOMICS RESEARCH BUILDING, PALO ALTO**		Project Number: **640-389**
Approved: Project Director	Location: VAPAHCS - PALO ALTO		Building Number: **51**
	Date: **06/02/2014**	Checked	Drawn: **BBSE**
			Drawing Number: **SS302** Dwg. of

Office of Construction and Facilities Management

Department of Veterans Affairs

VA FORM 08-6231

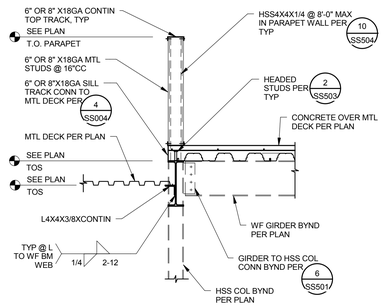

SECTION J SS303 — 1/2" = 1'-0"

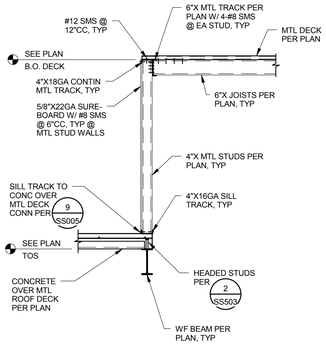

SECTION K SS303 — 1/2" = 1'-0"

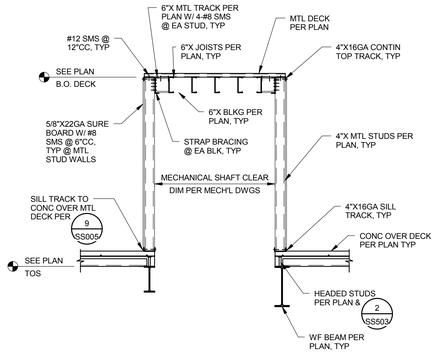

SECTION L SS303 — 1/2" = 1'-0"

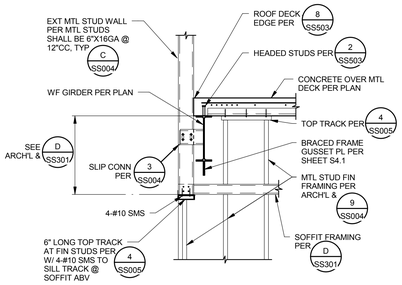

SECTION M SS303 — 1/2" = 1'-0"

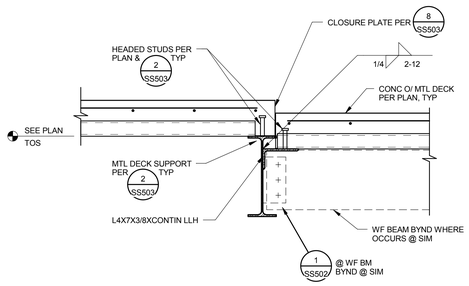

SECTION E SS303 — 1" = 1'-0"

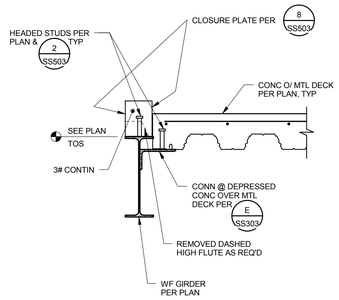

SECTION F SS303 — 1" = 1'-0"

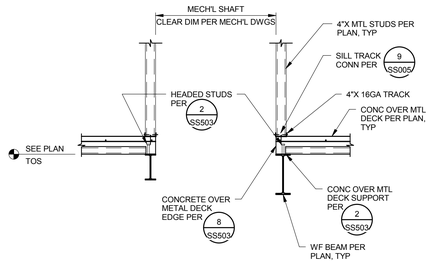

SECTION G SS303 — 1/2" = 1'-0"

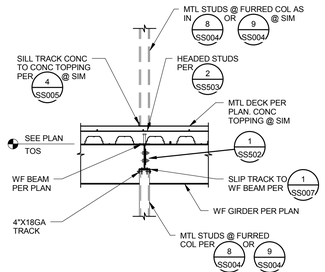

SECTION H SS303 — 1/2" = 1'-0"

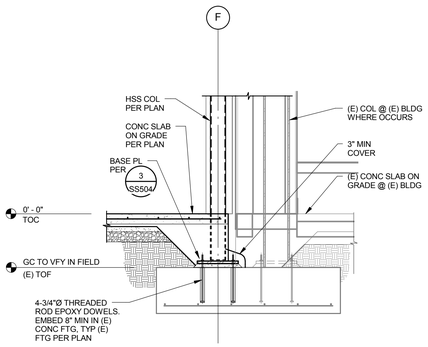

SECTION A SS303 — 1/2" = 1'-0"

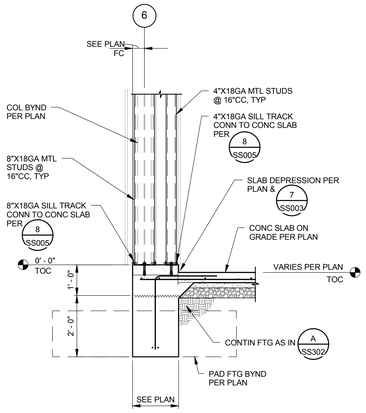

SECTION B SS303 — 1/2" = 1'-0"

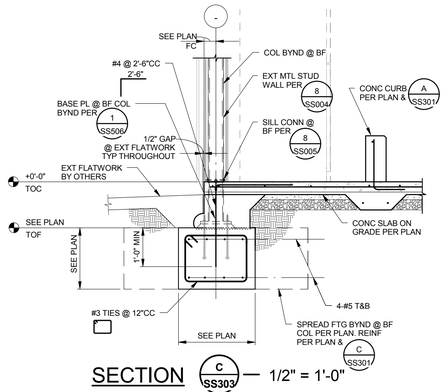

SECTION C SS303 — 1/2" = 1'-0"

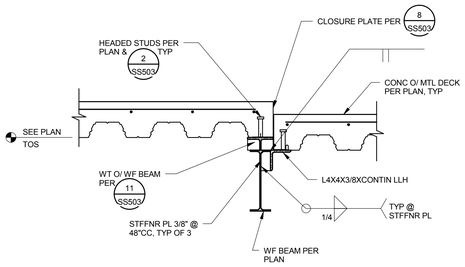

SECTION D SS303 — 1" = 1'-0"

HILLIARD ARCHITECTS INC. COPYRIGHT

FINAL BID DOCUMENTS

Revisions:	Date

CONSULTANTS:

Buehler & Buehler Structural Engineers, Inc.
5 Third Street, Suite 1123, San Francisco, CA 94103
tel 415.495.1635 fax 415.495.1639
Sacramento · Phoenix · San Francisco

REGISTERED PROFESSIONAL ENGINEER — JOHN D. HARVEY No. 4660 — STRUCTURAL — STATE OF CALIFORNIA

ARCHITECT/ENGINEERS:

ESTABLISHED 1988 HILLIARD ARCHITECTS GOING GREEN

HILLIARD ARCHITECTS, INC
251 Post Street, Suite 620
San Francisco, CA 94108-5017
Tel 415 989 6400, Fax 415 989 3056
www.HilliardArchitects.com

Drawing Title: **SECTIONS**

Approved: Project Director

Project Title: **GENOMICS RESEARCH BUILDING, PALO ALTO**

Location: VAPAHCS - PALO ALTO

Date: **06/02/2014** | Checked | Drawn: **BBSE**

Project Number: **640-389**

Building Number: **51**

Drawing Number: **SS303**

Dwg. of

Office of Construction and Facilities Management

Department of Veterans Affairs

VA FORM 08-6231

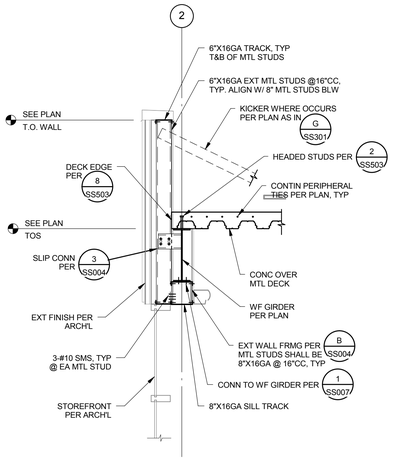

SECTION E SS304 — 1/2" = 1'-0"

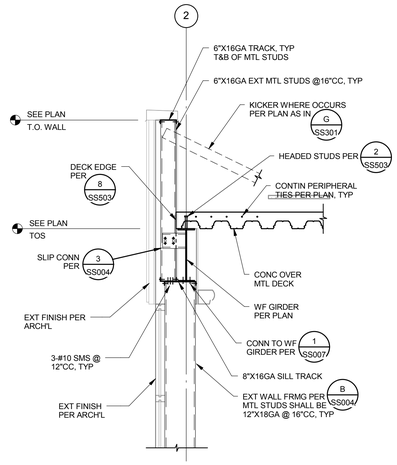

SECTION F SS304 — 1/2" = 1'-0"

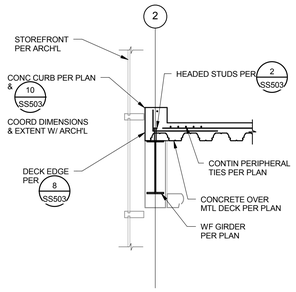

SECTION C SS304 — 1/2" = 1'-0"

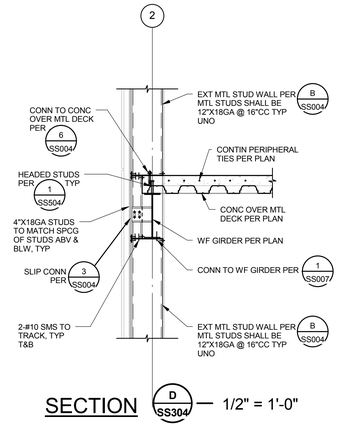

SECTION D SS304 — 1/2" = 1'-0"

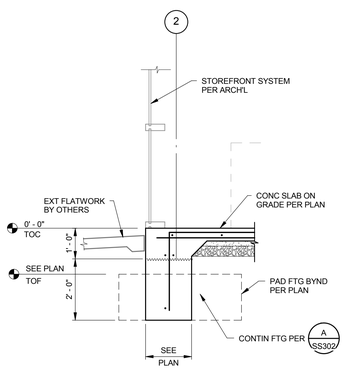

SECTION A SS304 — 1/2" = 1'-0"

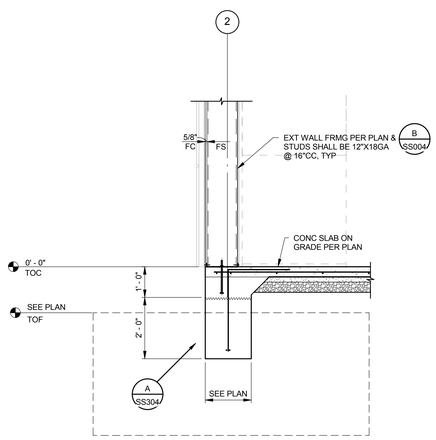

SECTION B SS304 — 1/2" = 1'-0"

HILLIARD ARCHITECTS INC. COPYRIGHT

FINAL BID DOCUMENTS

Revisions:	Date

CONSULTANTS:

Buehler & Buehler Structural Engineers, Inc.
5 Third Street, Suite 1123, San Francisco, CA 94103
tel 415.495.1635 fax 415.495.1639
Sacramento . Phoenix . San Francisco

REGISTERED PROFESSIONAL ENGINEER — JOHN D. HARVEY No. 4660 — STRUCTURAL — STATE OF CALIFORNIA

ARCHITECT/ENGINEERS:

ESTABLISHED 1988 HILLIARD ARCHITECTS GOING GREEN

HILLIARD ARCHITECTS, INC
251 Post Street, Suite 620
San Francisco, CA 94108-5017
Tel 415 989 6400, Fax 415 989 3056
www.HilliardArchitects.com

Drawing Title	**SECTIONS**
Approved: Project Director	
Project Title	**GENOMICS RESEARCH BUILDING, PALO ALTO**
Location	VAPAHCS - PALO ALTO
Date	**06/02/2014**
Checked	
Drawn	**BBSE**
Project Number	**640-389**
Building Number	**51**
Drawing Number	**SS304**
Dwg. of	

Office of Construction and Facilities Management

Department of Veterans Affairs

VA FORM 08-6231

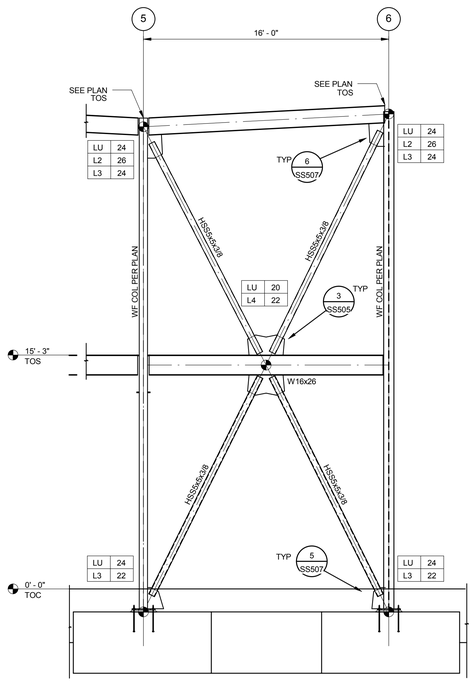

ELEVATION 1 SS401 — 1/4" = 1'-0"
LINE A

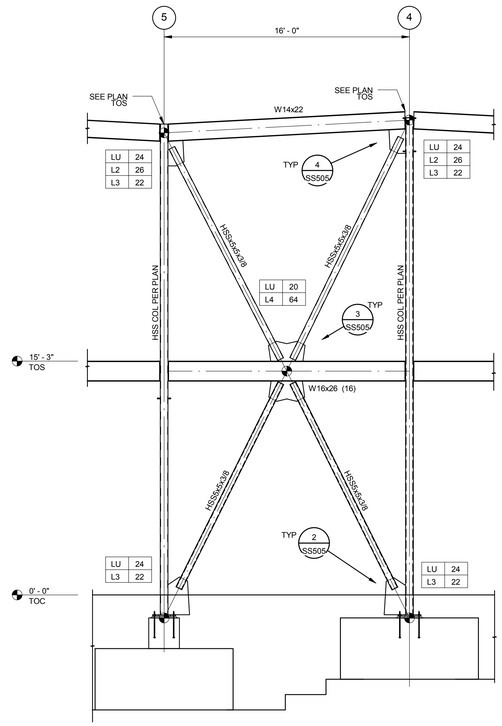

ELEVATION 2 SS401 — 1/4" = 1'-0"
LINE F

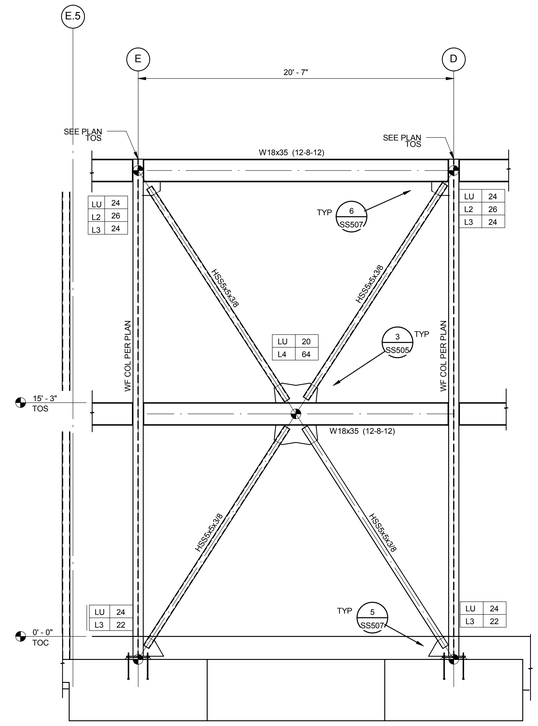

ELEVATION 3 SS401 — 1/4" = 1'-0"
LINE 2

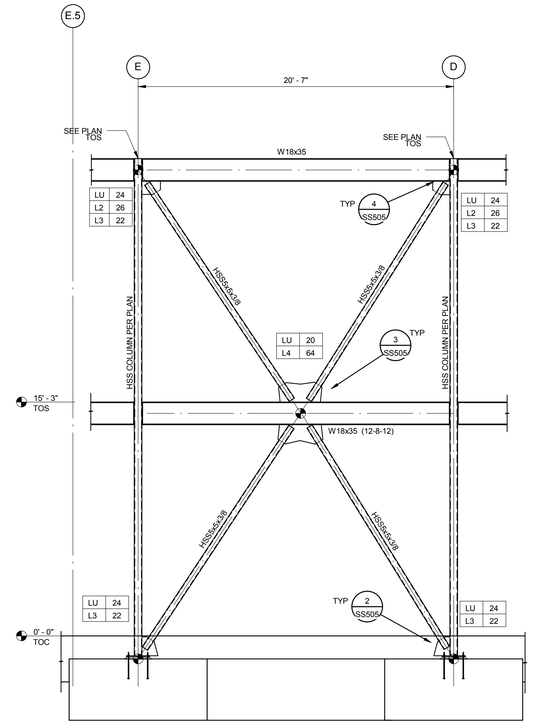

ELEVATION 4 SS401 — 1/4" = 1'-0"
LINE 6

HILLIARD ARCHITECTS INC. COPYRIGHT

FINAL BID DOCUMENTS

Revisions:	Date

CONSULTANTS:

Buehler & Buehler Structural Engineers, Inc.
3 Third Street, Suite 1125, San Francisco, CA 94103
tel 415.495.1610 fax 415.495.1639
Sacramento · Phoenix · San Francisco

REGISTERED PROFESSIONAL ENGINEER
JOHN D. HARVEY
No. 4560
STRUCTURAL
STATE OF CALIFORNIA

ARCHITECT/ENGINEERS:

ESTABLISHED 1988 HILLIARD ARCHITECTS GOING GREEN

HILLIARD ARCHITECTS, INC
251 Post Street, Suite 620
San Francisco, CA 94108-5017
Tel 415 989 6400, Fax 415 989 3056
www.HilliardArchitects.com

Drawing Title: ***ELEVATIONS***

Approved: Project Director

Project Title: ***GENOMICS RESEARCH BUILDING, PALO ALTO***

Location: VAPAHCS - PALO ALTO

Date: *06/02/2014* | Checked | Drawn: *BBSE*

Project Number: *640-389*

Building Number: *51*

Drawing Number: ***SS401***

Dwg. of

Office of Construction and Facilities Management

Department of Veterans Affairs

VA FORM 08-6231

A/SS501 BASE PLATE SCHEDULE

COLUMN SIZE	BASE PLATE SIZE					
	'T'	'A'	'B'	'C'	'D'	'E'
3x3	5/8"	9"	9"	3 1/2"	2"	7"
4x4	5/8"	10"	10"	5"	2 1/2"	7 1/2"
5x5	1"	11"	11"	5 1/2"	3"	8"
6x6	1"	12"	12"	7"	3 1/2"	8 1/2"
7x7	1 1/4"	13"	13"	8"	4"	9"
8x8	1 1/4"	14"	14"	9"	4 1/2"	9 1/2"
10x10	1 1/2"	16"	16"	11"	5 1/2"	10 1/2"
12x12	1 1/2"	18"	18"	13"	6 1/2"	11 1/2"

510SD001-1

NOTES:
1. WELD 'W' SHALL BE 1/4" AT BASE PLATES 3/4" AND LESS, 5/16" AT BASE PLATES GREATER THAN 3/4".

B/SS501 CONNECTION SCHEDULE

512SD021-1

HSS COLUMN SIZE	STFNR PL'T' (1)	W	BASE PL			
			'A'	'B' (2)	'C'	'D'
3"X3"	1/4"	3/16"	11"	4"	7 1/2"	1/2"
4"X4"	1/4"	1/4"	12"	5"	8 1/2"	5/8"
5"X5"	3/8"	1/4"	13"	6"	9 1/2"	3/4"
6"X6"	3/8"	1/4"	14"	7"	10 1/2"	3/4"
7"X7"	1/2"	1/4"	15"	8"	11 1/2"	3/4"
8"X8"	3/4"	5/16"	15"	9"	12 1/2"	7/8"
10"X10"	3/4"	5/16"	16"	11"	14 1/2"	1"

NOTES:
1. USE PL 'T' FOR LARGEST HSS COLUMN AT CONNECTION
2. 'B' INDICATES THE MINIMUM WIDTH. USE THE GREATER WIDTH OF THE BEAM FLANGE OR THE MINIMUM INDICATED.
3. WHERE BEAM FRAMES INTO COLUMN AT WEB STIFFENER PL, SEE 7/SS501 OR 3/SS501 FOR ADDL REQS.
4. WELD 'W' SHALL BE 1/4" AT BASE PLATES 3/4" THICK AND LESS, 5/16" AT BASE PLATES GREATER THAN 3/4" THICK.

C/SS501 CONNECTION SCHEDULE

512SD016-1

BEAM SIZE	NO. & DIA. A325-N BOLTS	SHR PL 'T'	W	WT SIZE WHERE OCCURS
C8 & C10	2- 7/8"Ø	1/4"	1/4"	WT6x13
W8 & W10	2- 7/8"Ø	1/4"	1/4"	WT6x13
C12, W12 & W14	3- 7/8"Ø	3/8"	1/4"	WT6x25
W16	4- 7/8"Ø	3/8"	5/16"	WT6x25
W18	5- 7/8"Ø	3/8"	5/16"	WT6x25
W21	5- 7/8"Ø	3/8"	5/16"	WT6x25
W24	6- 7/8"Ø	1/2"	3/8"	
W27	7- 7/8"Ø	1/2"	3/8"	
W30	8- 7/8"Ø	1/2"	3/8"	

1. SHEAR PL 'T' IS MINIMUM. USE GREATER THICKNESS AS REQUIRED BY DETAILS.

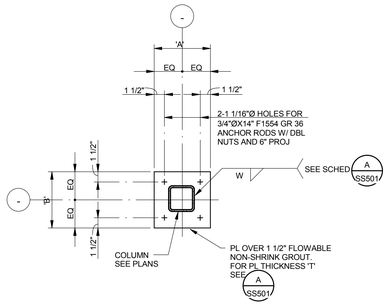

1/SS501 DETAIL
510SD002-12

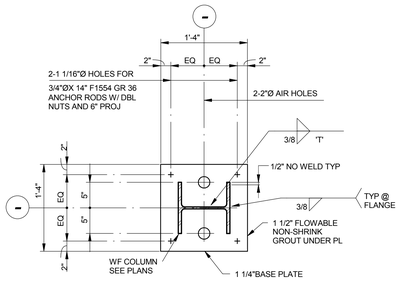

DETAIL
TYP WF BASE PL
510SD009-12
2/SS501

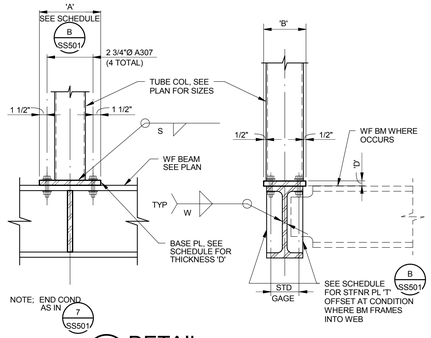

3/SS501 DETAIL
HSS ABOVE TO TRANSFER BEAM BELOW
512SD019-12

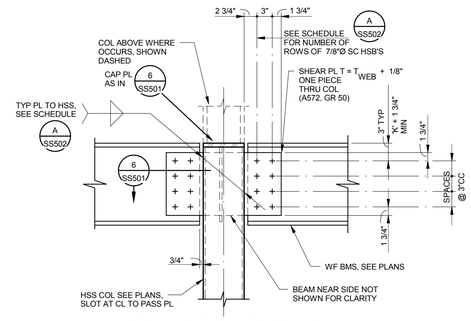

NOTE: SIMILAR CONDITION AT 1-ROW SC SEISMIC CONNECTION WHERE INDICATED ON PLAN BY MK ●

4/SS501 DETAIL
SEISMIC TIE WF BEAM TO HSS COLUMN
512SD026-12

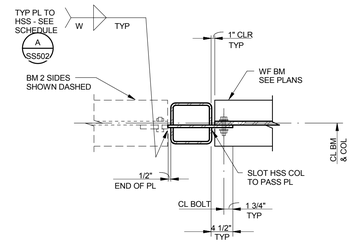

BEAM ONE OR TWO SIDES

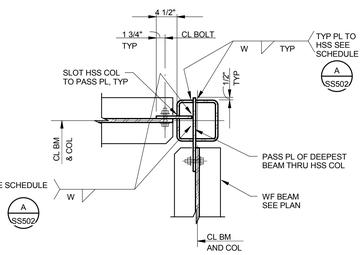

BEAM TWO SIDES

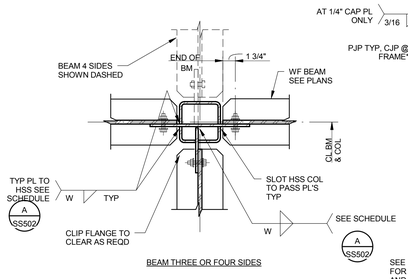

BEAM THREE OR FOUR SIDES

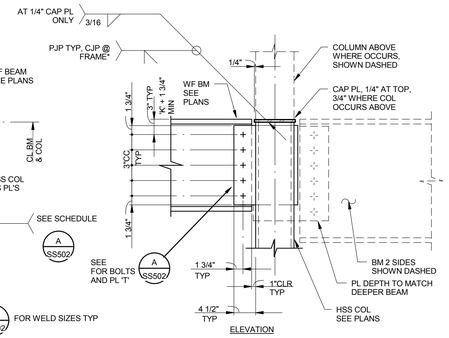

ELEVATION

*CJP WELD @ FRAME COL SPLICE IS A DEMAND CRITICAL WELD TO BE PERFORMED IN ACCORDANCE W/ AISC 341 SECTION 7.3B AND APPENDIX W6

6/SS501 DETAIL
512SD011-12

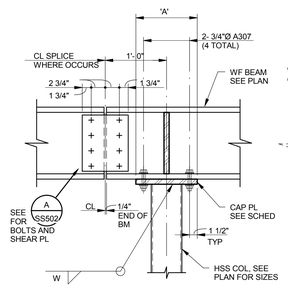

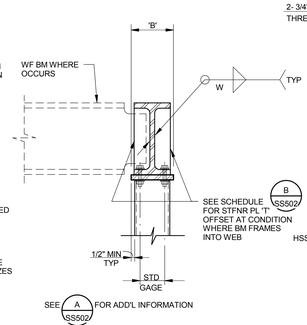

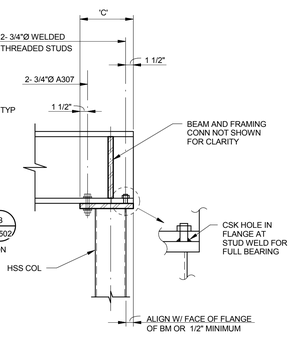

7/SS501 DETAIL
BEAM OVER HSS COLUMN
512SD020-12

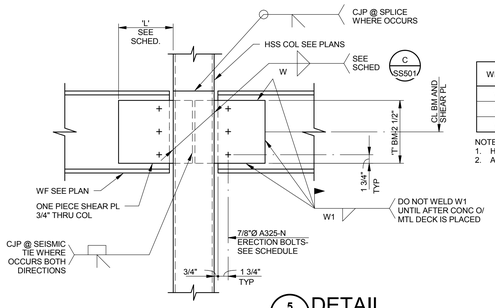

5/SS501 DETAIL
512SD029-12
WELDED SEISMIC TIE @ HSS COL

WF SIZE	PL LENGTH 'L'	W1	# OF BOLTS
W16	10"	3/8	3
W18	10"	3/8	3
W21	12"	3/8	3

NOTES:
1. HSS SLOT WIDTH = PL 'T' + 1/8" MAX.
2. ALL PL'S SHALL BE A572 GR. 50.

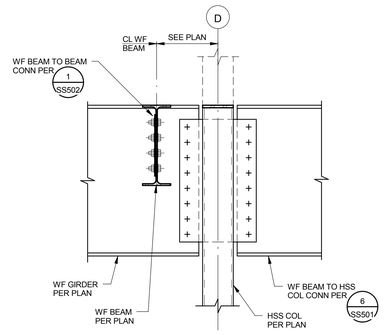

DETAIL 8/SS501 — 1" = 1'-0"

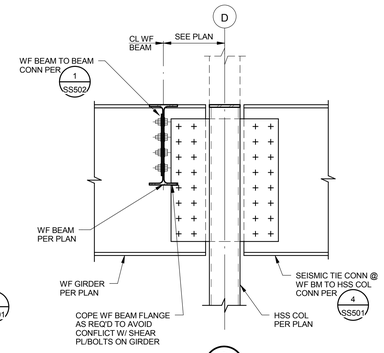

DETAIL 9/SS501 — 1" = 1'-0"

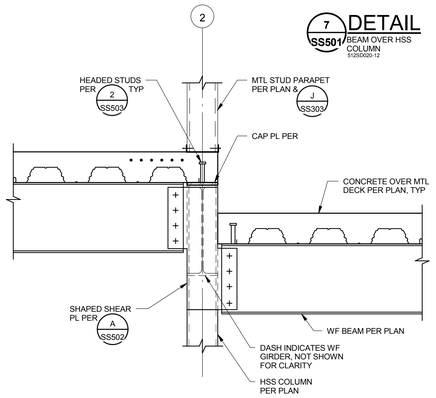

DETAIL 10/SS501 — 1" = 1'-0"

HILLIARD ARCHITECTS INC. COPYRIGHT

FINAL BID DOCUMENTS

Revisions:	Date

CONSULTANTS:

Buehler & Buehler Structural Engineers, Inc.
3 Third Street, Suite 1123, San Francisco, CA 94103
tel 415.495.1635 fax 415.495.1639
Sacramento · Phoenix · San Francisco

REGISTERED PROFESSIONAL ENGINEER — JOHN D. HARVEY No. 4660 — STRUCTURAL — STATE OF CALIFORNIA

ARCHITECT/ENGINEERS:

ESTABLISHED 1988 HILLIARD ARCHITECTS GOING GREEN

HILLIARD ARCHITECTS, INC
251 Post Street, Suite 620
San Francisco, CA 94108-5017
Tel 415 989 6400, Fax 415 989 3056
www.HilliardArchitects.com

Drawing Title: **TYPICAL STEEL DETAILS**

Approved: Project Director

Project Title: **GENOMICS RESEARCH BUILDING, PALO ALTO**

Location: VAPAHCS - PALO ALTO

Date: **06/02/2014** | Checked | Drawn: **BBSE**

Project Number: **640-389**

Building Number: **51**

Drawing Number: **SS501**

Dwg. of

Office of Construction and Facilities Management

Department of Veterans Affairs

VA FORM 08-6231

A/SS502 CONNECTION SCHEDULE
513SD001-1

BEAM SIZE	NO. & DIA. A325-N BOLTS	SHR Ê 'T'	W	MAX. LOAD CAPACITY 2
C8 & C10	2 - 7/8"Ø	1/4"	3/16"	26.1 K
W8 & W10	2 - 7/8"Ø	1/4"	3/16"	26.1 K
W12 & W14	3 - 7/8"Ø	1/4"	3/16"	39.1 K
W16	4 - 7/8"Ø	3/8"	1/4"	78.3 K
W18	5 - 7/8"Ø	3/8"	1/4"	97.9 K
W21	5 - 7/8"Ø	3/8"	1/4"	97.9 K
W24	6 - 7/8"Ø	3/8"	1/4"	117K
W27	7 - 7/8"Ø	3/8"	1/4"	137 K
W30	8-1"Ø	3/8"	5/16"	152K
W33	9-1"Ø	1/2"	3/8"	227 K
W36	10-1"Ø	5/8"	3/8"	275 K

1. THIS SCHEDULE APPLIES TO NON-FRAME CONNECTIONS, TYPICAL.
2. LRFD LOAD CAPACITY PER AISC MANUAL 13TH ED., TABLE 10-9A.

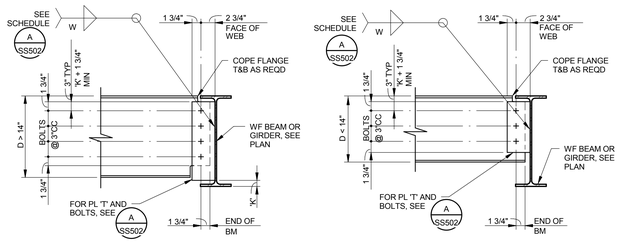

NOTE:
CONTRACTOR MAY USE HORIZONTAL SHORT SLOTTED HOLES FOR THESE CONNECTIONS ONLY. THE SHORT SLOTTED HOLES SHALL BE IN THE SHEAR PL WITH HARDENED WASHERS PROVIDED OVER THE SLOTS. TYPE 'N' BEARING CONNECTIONS SHALL BE USED.

1 SS502 DETAIL
513SD002-12
BEAM TO BEAM - ONE SIDE

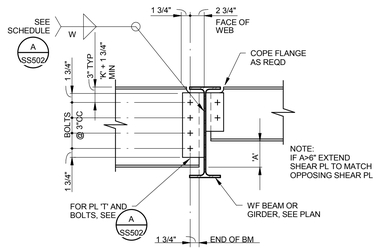

NOTE:
CONTRACTOR MAY USE HORIZONTAL SHORT SLOTTED HOLES FOR THESE CONNECTIONS ONLY. THE SHORT SLOTTED HOLES SHALL BE IN THE SHEAR PL WITH HARDENED WASHERS PROVIDED OVER THE SLOTS. TYPE 'N' BEARING CONNECTIONS SHALL BE USED UNO ON THE DRAWINGS.

2 SS502 DETAIL
513SD003-12
BEAM TO BEAM - TWO SIDES

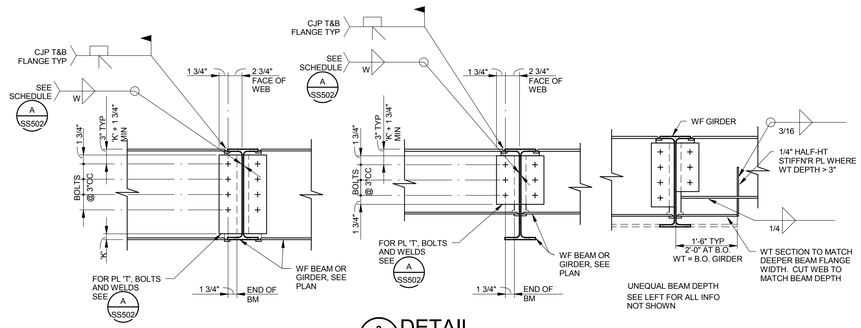

3 SS502 DETAIL
513SD004-12
NON-FRAME MOMENT CONNECTION BEAM TO BEAM

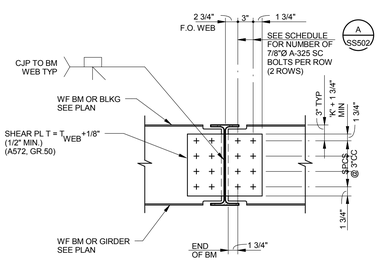

NOTE: SIMILAR CONDITION AT 1-ROW SC SEISMIC CONNECTION WHERE INDICATED ON PLAN BY MK ●

4 SS502 DETAIL
513SD013-12
SEISMIC TIE @ WF BM OR GIRDER

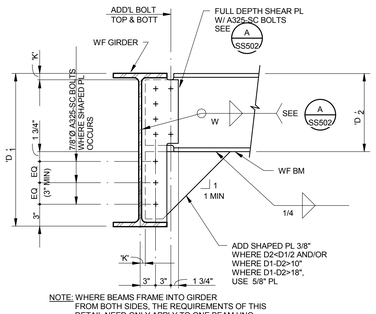

NOTE: WHERE BEAMS FRAME INTO GIRDER FROM BOTH SIDES, THE REQUIREMENTS OF THIS DETAIL NEED ONLY APPLY TO ONE BEAM UNO

5 SS502 DETAIL
513SD010-12

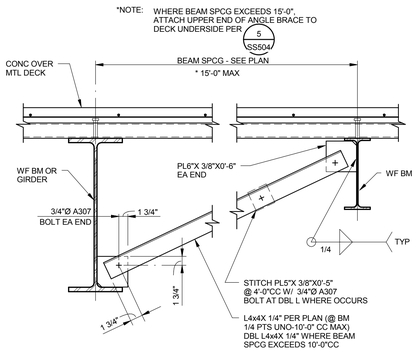

6 SS502 DETAIL
513SD012-12

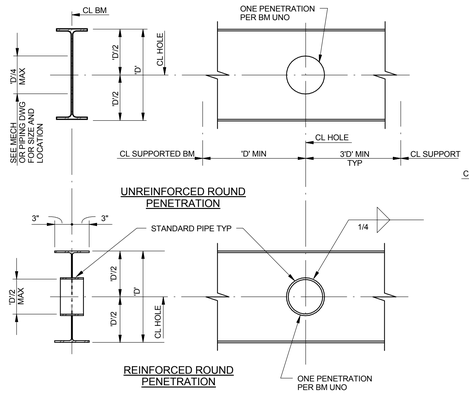

7 SS502 DETAIL
514SD005-12

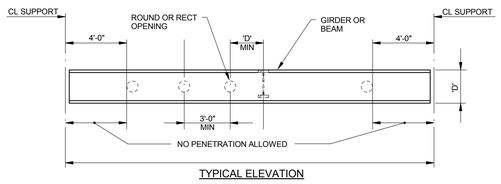

TYPICAL ELEVATION

NOTES:
1. NO PENETRATIONS OF ANY KIND ALLOWED IN MEMBERS SMALLER THAN W27.
2. NO REINFORCED PENETRATIONS ALLOWED EXCEPT AS NOTED ON THE DRAWING.

8 SS502 DETAIL
514SD006-12

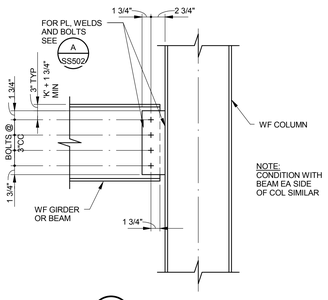

9 SS502 DETAIL
BEAM TO COLUMN FLANGE - FLOOR
512SD001-12

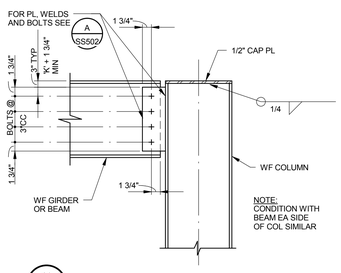

10 SS502 DETAIL
BEAM TO COLUMN FLANGE - ROOF
512SD002-12

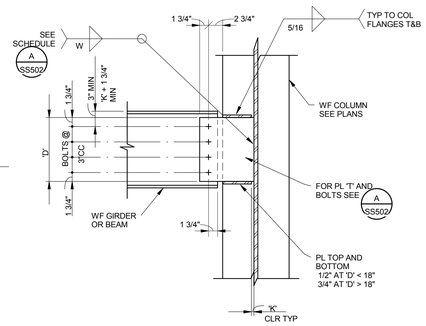

11 SS502 DETAIL
512SD004-12
BEAM TO COLUMN WEB - FLOOR

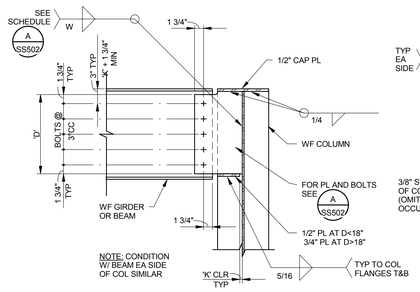

12 SS502 DETAIL
BEAM TO COLUMN WEB - ROOF
512SD005-12

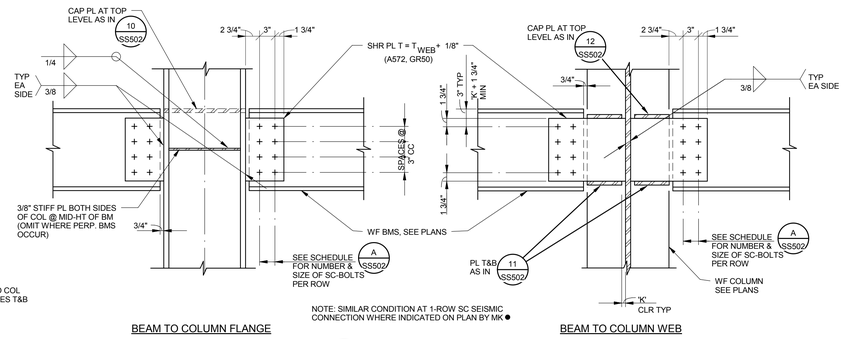

NOTE: SIMILAR CONDITION AT 1-ROW SC SEISMIC CONNECTION WHERE INDICATED ON PLAN BY MK ●

13 SS502 DETAIL
512SD007-12
SEISMIC TIE WF BEAM TO WF COLUMN

FINAL BID DOCUMENTS

HILLIARD ARCHITECTS INC. COPYRIGHT

Revisions:	Date

CONSULTANTS:

Buehler & Buehler Structural Engineers, Inc.
5 Third Street, Suite 1125, San Francisco, CA 94103
tel 415.495.1635 fax 415.495.1639
Sacramento · Phoenix · San Francisco

REGISTERED PROFESSIONAL ENGINEER — JOHN D. HARVEY No. 4660 — STRUCTURAL — STATE OF CALIFORNIA

ARCHITECT/ENGINEERS:

ESTABLISHED 1988 HILLIARD ARCHITECTS GOING GREEN

HILLIARD ARCHITECTS, INC
251 Post Street, Suite 620
San Francisco, CA 94108-5017
Tel 415 989 6400, Fax 415 989 3056
www.HilliardArchitects.com

Drawing Title: **TYPICAL STEEL DETAILS**	Project Title: **GENOMICS RESEARCH BUILDING, PALO ALTO**	Project Number: **640-389**	Office of Construction and Facilities Management
Approved: Project Director	Location: VAPAHCS - PALO ALTO	Building Number: **51**	
	Date: **06/02/2014** / Checked / Drawn: **BBSE**	Drawing Number: **SS502**	Department of Veterans Affairs
		Dwg. of	

VA FORM 08-6231

53050001-1

A/SS503 DECK WELDING SCHEDULE

DECK TYPE	DEPTH & GAUGE	PERPENDICULAR SUPPORTS	PARALLEL SUPPORTS	SIDE LAPS	DIAPHRAGM SHEAR CAPACITY
3W-36 FLOOR DECK	3"X 20 GA	4 PW PER SHEET	PW @ 12" CC	BP @ 36" CC	2563 #/'
B-36 ROOF DECK	1 1/2"X 20 GA	7 PW PER SHEET	PW @ 12" CC	TSW @ 24" CC	1497 #/'
3W-36 ROOF DECK	3"X 20 GA	4 PW PER SHEET	PW @ 12" CC	BP @ 24" CC	2085 #/'

1. PW= 3/4" DIAMETER (1/2" EFFECTIVE DIAMETER) PUDDLE WELD ; TSW= 1 1/2" MIN TOP SEAM WELD ; BP= BUTTON PUNCH
2. METAL DECK SHALL BE VERCO OR APPROVED EQUAL, OF TYPE AND GAUGE SHOWN ON PLANS AND WELDED AS SHOWN ABOVE.
3. AT COMPOSITE FLOOR DECKS, 3/4"Ø SHEAR STUDS MAY SUBSTITUTE FOR 3/4"Ø PUDDLE WELDS.
4. SEE B/SS503 FOR TYPICAL WELD PATTERNS.
5. SEE 1/SS503, 3/SS503 & 5/SS503 FOR METAL DECK WELDING AT STRUCT STEEL SUPPORTS.
6. ALL METAL DECK SHALL HAVE TWO SPANS MINIMUM.
7. PROVIDE SHORING AS REQUIRED AT ALL DECKS PER MFR RECOMMENDATIONS.
8. GC SHALL PROVIDE TEMPORARY SHARING OF MTL DECK AS REQ'D.

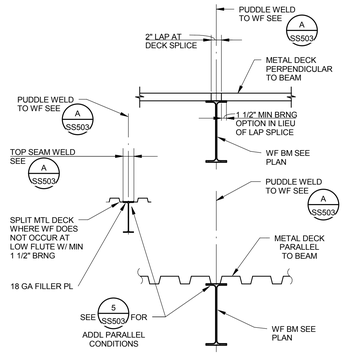

NOTE: PROVIDE 2 ROWS OF PW AT ALL DRAG LINES SHOWN ON PLAN (BEAMS W/ SPECIAL END CONNECTIONS *,**,*•,*••,**•)

1/SS503 DETAIL
53050003-12
METAL DECK W/O CONC TO WF BEAMS

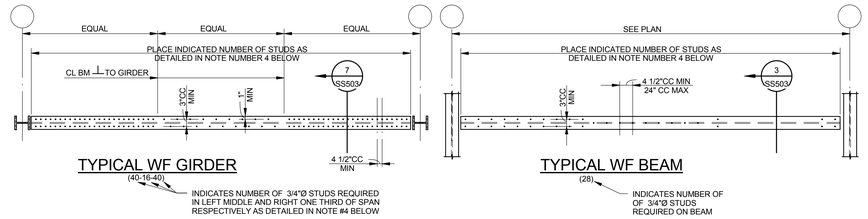

TYPICAL WF GIRDER

(40-16-40) INDICATES NUMBER OF 3/4"Ø STUDS REQUIRED IN LEFT MIDDLE AND RIGHT ONE THIRD OF SPAN RESPECTIVELY AS DETAILED IN NOTE #4 BELOW

TYPICAL WF BEAM

(28) INDICATES NUMBER OF OF 3/4"Ø STUDS REQUIRED ON BEAM

NOTES:
1. SHEAR CONNECTORS FOR COMPOSITE BEAMS SHALL BE AUTOMATIC WELDED HIGH STRENGTH 3/4"Ø NELSON HEADED ANCHORS OR APPROVED EQUIVALENT.
2. ALL WELDING OF SHEAR CONNECTORS SHALL CONFORM TO THE LATEST EDITION OF "RECOMMENDED PRACTICES FOR STUD WELDING" AND "STRUCTURAL WELDING CODE" PUBLISHED BY THE AMERICAN WELDING SOCIETY.
3. SHEAR CONNECTORS SHALL PROJECT A MINIMUM OF 1 3/4" ABOVE THE TOP OF THE METAL DECK AND SHALL BE HELD A MINIMUM OF 3/4" CLEAR FROM TOP OF THE CONCRETE SLAB.
4. SHEAR CONNECTORS SHALL BE UNIFORMLY SPACED. USE NO MORE THAN ONE STUD PER RIB WHERE THE NUMBER OF SHEAR CONNECTORS REQUIRED IS LESS THAN OR EQUAL TO THE NUMBER OF RIBS AVAILABLE. WHERE THE NUMBER OF SHEAR CONNECTORS EXCEEDS THE NUMBER OF RIBS AVAILABLE, PLACE ONE SHEAR CONNECTOR PER RIB FULL LENGTH OF BEAM. PLACE BALANCE OF SHEAR CONNECTORS IN EACH RIB BEGINNING AT THE SUPPORTS AT EACH END AND MOVING TOWARD MID SPAN UNTIL THE REQUIRED NUMBER OF SHEAR CONNECTORS ARE SUPPLIED.
5. WHERE NOT INDICATED OTHERWISE, PROVIDE 3/4"Ø SHEAR CONNECTORS AT 24"CC MAXIMUM SPACING AT ALL BEAMS RECEIVING METAL DECK AND CONCRETE.
6. CONTRACTOR SHALL SUBMIT SHOP DRAWINGS FOR REVIEW PRIOR TO INSTALLATION.

2/SS503 DETAIL
53150006-12

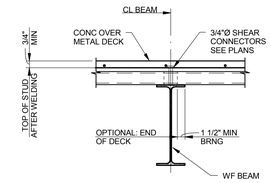

3/SS503 DETAIL
53150006-12
TYPICAL BEAM @ CONCRETE OVER METAL DECK

53050002-1

B/SS503 METAL DECK WELD PATTERNS

DECK TYPE	PROFILE	NO. 3/4"Ø PW PER SHEET
TYPE 3W36 OR TYPE 2W36	36"	4
TYPE B36	36"	7

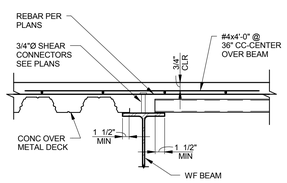

4/SS503 DETAIL
53150012-12
CHANGE IN DECK SPANS

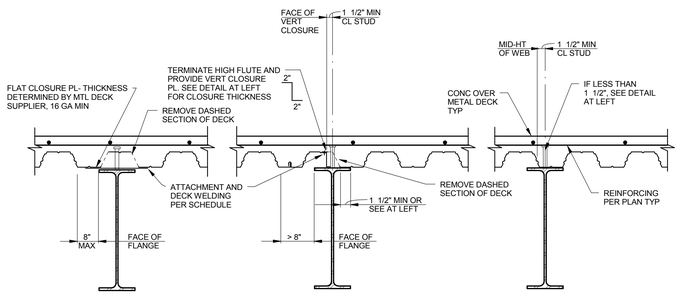

5/SS503 DETAIL
53150011-12
METAL DECK W/ CONCRETE PARALLEL TO BEAM

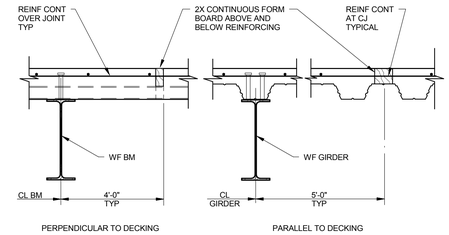

NOTES:
1. CONTRACTOR TO SUBMIT CONSTRUCTION JOINT LAYOUT FOR REVIEW BY ARCHITECT/STRUCTURAL ENGINEER PRIOR TO CONSTRUCTION.
2. RATIO OF LENGTH TO WIDTH OF POUR SHALL NOT EXCEED 1 1/2 : 1.

6/SS503 DETAIL
53150017-12
CONSTRUCTION JOINT IN CONCRETE OVER METAL DECK

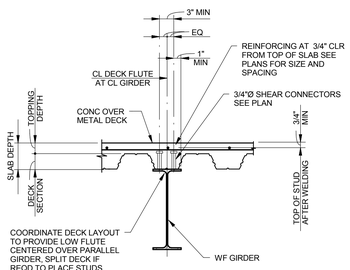

7/SS503 DETAIL
53150015-12
TYPICAL GIRDER @ CONC OVER METAL DECK

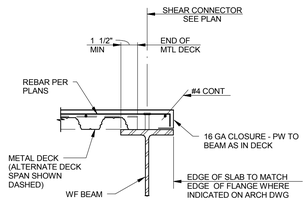

8/SS503 DETAIL
53150013-12
FLUSH DECK EDGE

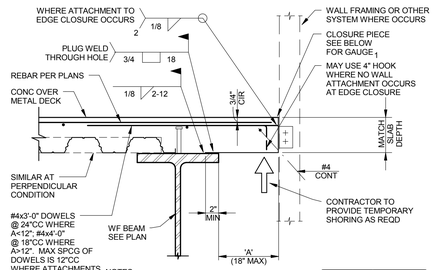

NOTES:
1. USE 10GA MIN CLOSURE WHERE METAL STUD WALL ATTACHMENT OCCURS. USE 3/16" MIN WHERE ATTACHMENT OF OTHER SYSTEMS OR COMPONENTS OCCURS.
2. DEFORMED BAR ANCHORS (DBA) OF SAME SIZE AND SPACING MAY BE PROVIDED IN LIEU OF REINFORCING DOWELS.
4. NOTCH CLOSURE AROUND SHEAR STUDS WHERE CLEARANCE IS NOT SUFFICIENT FOR STUD INSTALLATION
3. WHERE 'A' EXCEEDS 18", SEE DETAIL 5/SS503

'A'	GAUGE 1
TO 4"	14
TO 10"	10
TO 13"	3/16"
TO 18"	1/4"

9/SS503 DETAIL
53150014-12
DECK AT CANTILEVERED SLAB EDGE

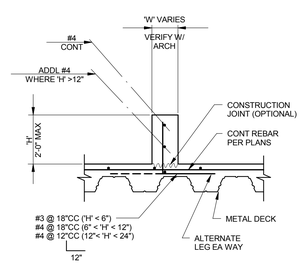

10/SS503 DETAIL
53150015-12
CONCRETE CURB OVER METAL DECK

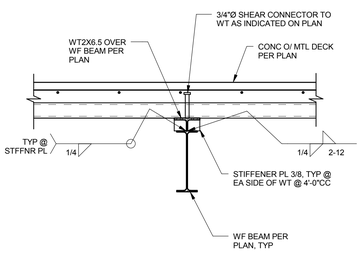

DETAIL 11/SS503 — 1" = 1'-0"

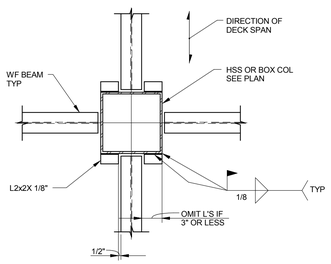

DETAIL 12/SS503
53050006-12

1. PROVIDE A WORK PLAN DETAILING THE MEANS AND METHODS TO BE USED FOR PLACEMENT OF CONCRETE, INCLUDING SCREEDING PROCEDURES AND LOCATIONS OF ANY CONSTRUCTION JOINTS, WHICH WILL ACHIEVE THE PERFORMANCE CRITERIA NOTED BELOW. A PRE-CONSTRUCTION MEETING SHALL BE SCHEDULED BY THE GENERAL CONTRACTOR, TO INCLUDE THE CONCRETE SUB-CONTRACTOR, ARCHITECT, STRUCTURAL ENGINEER, AND OWNER'S REPRESENTATIVE TO DISCUSS THE WORK PLAN AND PERFORMANCE OBJECTIVES.
2. THE FINAL TOP OF CONCRETE ELEVATION SHALL NOT DEVIATE BY MORE THAN 3/8" ABOVE OR BELOW THE TOP OF CONCRETE ELEVATION NOTED ON PLAN.
3. FLOOR FLATNESS FOR CONCRETE OVER METAL DECK SHALL CONFORM TO ACI 117. UNLESS STRICTER REQUIREMENTS ARE SPECIFIED BY THE ARCHITECT, FLOOR FLATNESS FOR THE COMPLETE OVERALL FLOOR AREA SHALL MEET THE FOLLOWING MINIMUM VALUES:
   SPECIFIED OVERALL VALUE FOR FLATNESS (SOFF) : 25
   MINIMUM LOCAL VALUE FOR FLATNESS (MLFF) : 17
   AREAS OF NON-COMPLIANCE SHALL BE REVIEWED BY THE OWNER AND ARCHITECT AND MAY REQUIRE ADDITIONAL FLOOR LEVELING OR GRINDING. THE COST OF ANY REMEDIAL ACTION SHALL BE BORNE BY THE CONTRACTOR.
4. IN NO CASE SHALL THE DEPTH OF CONCRETE OVER METAL DECK BE LESS THAN THAT SPECIFIED ON PLAN. NOTE THAT THE CONCRETE DEPTH WILL VARY DUE TO DECK AND BEAM DEFLECTIONS DURING CONCRETE PLACEMENT, AND SHALL BE CONSIDERED IN THE ESTIMATING OF CONCRETE VOLUME, COSTS AND PLACEMENT STRATEGIES.

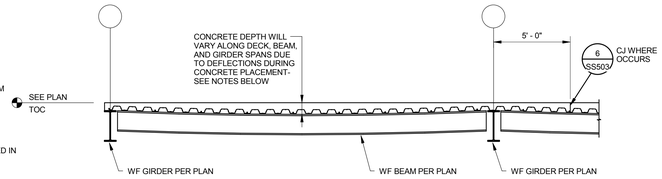

13/SS503 DETAIL
53150019-48
CONCRETE PLACEMENT OVER METAL DECK AT FLOORS

FINAL BID DOCUMENTS

HILLIARD ARCHITECTS INC. COPYRIGHT

Revisions:	Date

CONSULTANTS:

Buehler & Buehler Structural Engineers, Inc.
5 Third Street, Suite 1123, San Francisco, CA 94103
tel 415.495.1635 fax 415.495.1639
Sacramento · Phoenix · San Francisco

REGISTERED PROFESSIONAL ENGINEER — JOHN D. HARVEY No. 4660 — STRUCTURAL — STATE OF CALIFORNIA

ARCHITECT/ENGINEERS:

ESTABLISHED 1988 HILLIARD ARCHITECTS GOING GREEN

HILLIARD ARCHITECTS, INC
251 Post Street, Suite 620
San Francisco, CA 94108-5017
Tel 415 989 6400, Fax 415 989 3056
www.HilliardArchitects.com

Drawing Title: **TYPICAL METAL DECK DETAILS**	Project Title: **GENOMICS RESEARCH BUILDING, PALO ALTO**	Project Number: **640-389**	Office of Construction and Facilities Management
Approved: Project Director	Location: VAPAHCS - PALO ALTO	Building Number: **51**	
	Date: **06/02/2014** · Checked: · Drawn: **BBSE**	Drawing Number: **SS503** Dwg. of	Department of Veterans Affairs

VA FORM 08-6231

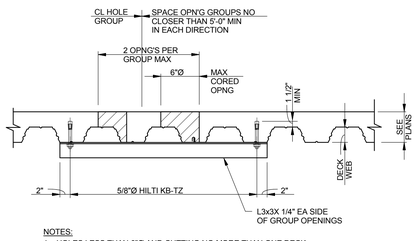

NOTES:
1. HOLES LESS THAN 6"Ø AND CUTTING NO MORE THAN ONE DECK WEB REQUIRE NO REINFORCING.
2. IF MORE THAN TWO DECK WEBS ARE CUT IN ADJACENT OPENINGS, SUPPLEMENTAL STEEL FRAMING WILL BE REQUIRED - NOTIFY STRUCTURAL ENGINEER.

1 SS504 COMPOSITE FLOOR DECK REINFORCING AT CORED OPENINGS

53150002-12

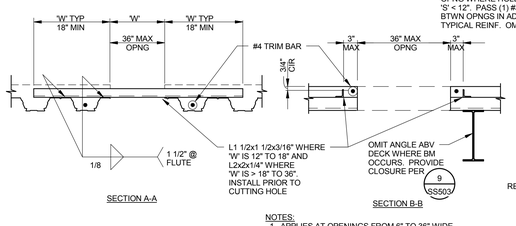

NOTES:
1. APPLIES AT OPENINGS FROM 6" TO 36" WIDE IN CONCRETE OVER METAL DECK
2. THE MIN. SPACING BETWEEN OPENINGS SHALL BE 2W' UNLESS OPENINGS ARE GROUPED AND TREATED AS A SINGLE COMBINED OPENING OF 3'-0" MAX. WIDTH

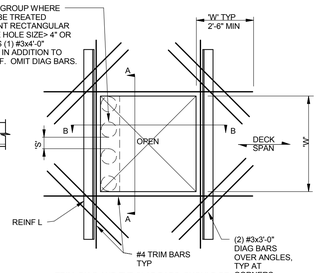

TRIM, DIAG AND TYP SLAB BARS SHOULD BE LOCATED TO MINIMIZE LAYERING OF BARS ABV REINF L. BARS MAY BE BENT DOWN TO WITHIN 3/4" CLR OF DECK TO MAINTAIN CONC COVER ABV. BARS MAY ALSO PASS THROUGH MAX 5/8" DIA HOLES IN REINF L'S, LOCATED AT MID-HT OF ANGLE LEG.

2 SS504 DETAIL

53150004-12

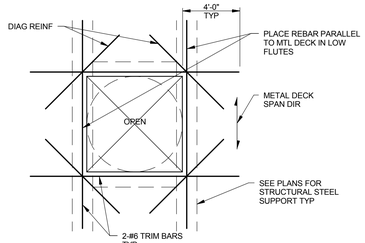

NOTE:
1. APPLIES AT OPENINGS GREATER THAN 3'-0" WIDE IN METAL DECK WITH CONCRETE
2. PROVIDE 2-#4x6'-0" DIAG AT RE-ENTRANT CORNERS OF ALL FLOOR OPENINGS 3'-0" OR GREATER, ELEVATOR SHAFTS, STAIRS, MAIN DUCT SHAFTS, ETC.
3. AT UNREINFORCED CONCRETE OVER METAL DECK, PROVIDE #3x2'-0" DIAG AT EACH CORNER OF COLUMN (4 TOTAL) TYPICAL ALL COLUMNS.

3 SS504 DETAIL

53150005-12
TRIM BARS @ OPENINGS >3'-0" IN METAL DECK W/ CONCRETE

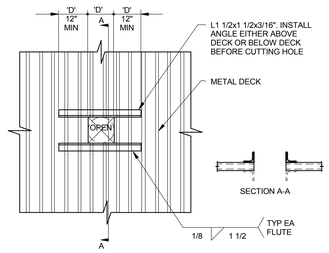

NOTE: APPLIES AT HOLES FROM 6" TO 24" WIDE IN METAL DECK WITHOUT CONCRETE

4 SS504 DETAIL

53150003-12

* INSTALL ALL ANCHORS AT CL LOW FLUTE ±1" MAX *

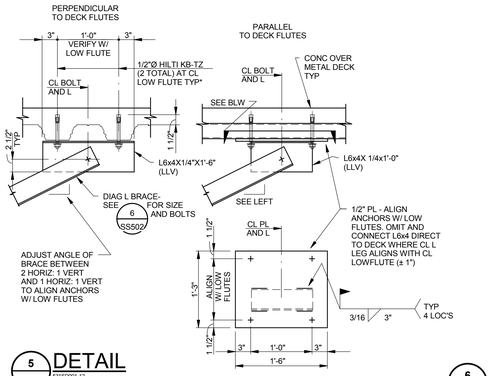

5 SS504 DETAIL

53150001-12
DIAGONAL BRACE TO MTL DECK W/ CONCRETE

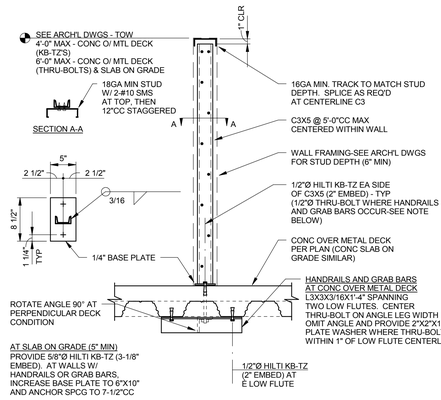

6 SS504 CANTILEVERED PARTIAL HEIGHT WALL

54250045-12

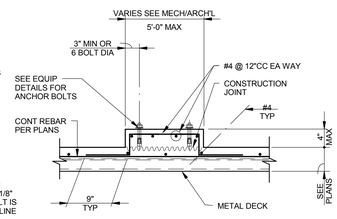

NOTE: FOR DIMENSIONS, LOCATION, AND ELEV SEE MECH'L, PLUMBING OR ELECTRICAL DWGS.

7 SS504 DETAIL

53150016-12
CONCRETE EQUIPMENT PAD @ CONCRETE OVER METAL DECK

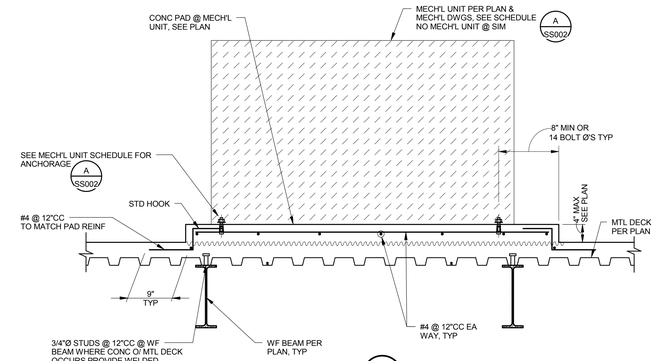

DETAIL 8 SS504 — 1" = 1'-0"

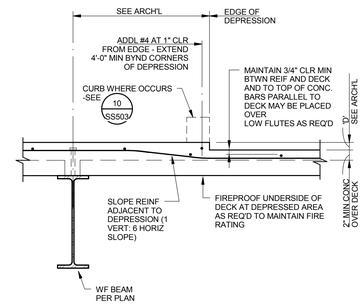

9 SS504 DETAIL

53150020-12
SLAB DEPRESSION AT CONC OVER MTL DECK

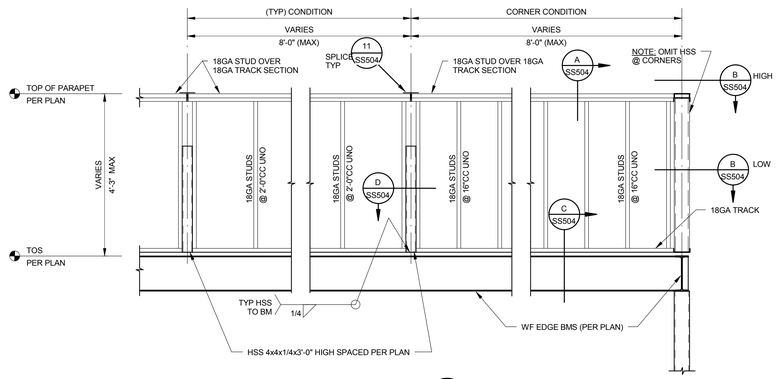

PARAPET ELEVATION 10 SS504 — 1/2" = 1'-0"

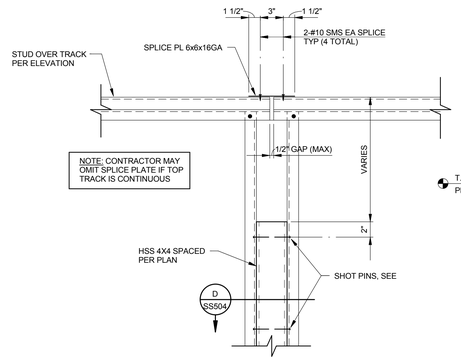

DETAIL 11 SS504 — 1 1/2" = 1'-0"

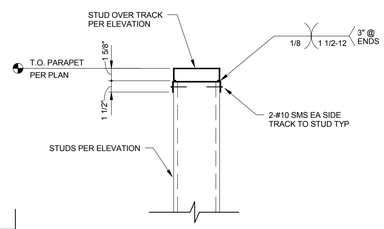

OPTION #1

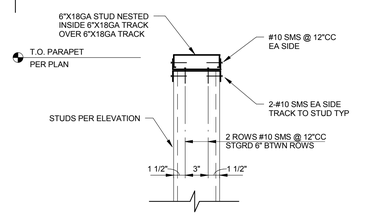

OPTION #2

SECTION A SS504 — 1 1/2" = 1'-0"

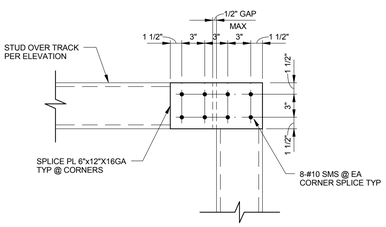

HIGH CONDITION

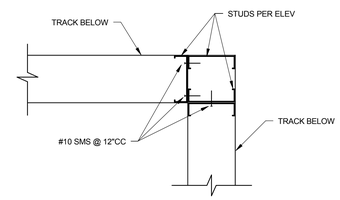

LOW CONDITION

SECTION B SS504 — 1 1/2" = 1'-0"

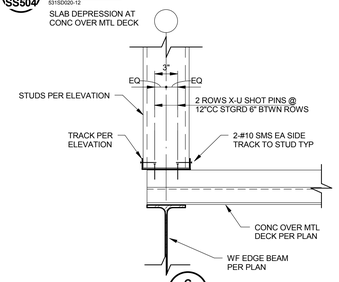

SECTION C SS504 — 1 1/2" = 1'-0"

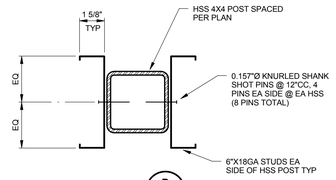

SECTION D SS504 — 3" = 1'-0"

FINAL BID DOCUMENTS

HILLIARD ARCHITECTS INC. COPYRIGHT

Revisions:	Date

CONSULTANTS:

Buehler & Buehler Structural Engineers, Inc.
5 Third Street, Suite 3123, San Francisco, CA 94103
tel 415.495.1630 fax 415.495.1639
Sacramento · Phoenix · San Francisco

REGISTERED PROFESSIONAL ENGINEER — JOHN D. HARVEY No. 4660 — STRUCTURAL — STATE OF CALIFORNIA

ARCHITECT/ENGINEERS:

ESTABLISHED 1988 HILLIARD ARCHITECTS GOING GREEN

HILLIARD ARCHITECTS, INC
251 Post Street, Suite 620
San Francisco, CA 94108-5017
Tel 415 989 6400, Fax 415 989 3056
www.HilliardArchitects.com

Drawing Title	**TYPICAL METAL DECK DETAILS**
Approved: Project Director	
Project Title	**GENOMICS RESEARCH BUILDING, PALO ALTO**
Location	VAPAHCS - PALO ALTO
Date	**06/02/2014**
Checked	
Drawn	**BBSE**
Project Number	**640-389**
Building Number	**51**
Drawing Number	**SS504**
Dwg. of	

Office of Construction and Facilities Management

Department of Veterans Affairs

VA FORM 08-6231

523SD0009-12

A / SS505 BRACE CONNECTION WELDING SCHEDULE

BRACE SIZE	BRACE TO GUSSET WELDS		AT BEAM TO COLUMN AND BASE PL CONNECTIONS			AT BEAM MIDSPAN CONNECTIONS		HORIZONTAL STRUT
	S1	L1	PL 'T'	S2	S3	PL'T'	S4	S5
HSS5x5x3/8	1/2	26" @ WF COL 30" @ HSS COL	1 1/4"	9/16	7/16	1 1/4"	9/16	N/A

NOTES:

1. GUSSET PL'S TO BE ASTM A572 GR 50
2. PLATE LENGTHS MAY BE ADJUSTED ± 1/2" TO FACILITATE FABRICATION. LENGTH OF WELDS L1, L2, L3 AND L4 HAVE BEEN INCREASED BY 1" TO ACCOMMODATE START-STOP TOLERANCE IN APPLICATION OF THE WELD. DETAILER NEED NOT ADD ADDITIONAL WELD LENGTH TO THE DIMENSION PROVIDED UNLESS THE GUSSET PLATE GEOMETRY DICTATES SO.
3. WHERE DIAG BRCG & HORIZ STRUT ATTACH TO A COMMON CONN PL, THE DIAG BRCG SIZE SHALL DETERMINE THE CONN PL 'T'.
4. FOR TYPICAL DIAGONAL BRACE SLOT DETAIL SEE 1/SS505
5. ALL WELDS SHOWN ON THIS SHEET SHALL BE 'DEMAND CRITICAL WELDS' (DCW) AS DEFINED IN AISC 341-05 SECTION 7.3B MADE WITH FILLER MATERIAL THAT CAN PRODUCE WELDS WITH MINIMUM CHARPY V-NOTCH TOUGHNESS OF 20 FT-LBS AT MINUS 20°F AND 40 FT-LB @ 70°F AS DETERMINED BY APPENDIX X OR OTHER APPROVED METHOD.
6. CONTRACTOR SHALL CLEARLY DELINEATE, WITH DURABLE METHODS, THE YIELD LINE ON ALL BRACED FRAME GUSSET PLATES TO FACILITATE PROPER INSTALLATION AND INSPECTION. FOR ADDITIONAL INFORMATION, SEE 2/SS506
7. DO NOT MAKE ATTACHMENTS TO DIAGONAL BRACING OR GUSSET PLATES WITHIN PROTECTED ZONES - SEE 3/SS506
8. FABRICATOR SHALL SUBMIT SHOP DRAWINGS FOR EACH JOINT THAT IS DRAWN, TO THE SAME HORIZONTAL AND VERTICAL SCALES SO THAT PROPER JOINT DETAILING MAY BE VERIFIED.
9. THE FABRICATOR SHALL SUBMIT ONE REPRESENTATIVE SAMPLE CONNECTION DETAIL FOR EACH JOINT CONFIGURATION TYPE FOR REVIEW TO VERIFY THE PARAMETERS GIVEN HAVE BEEN PROPERLY INTERPRETED PRIOR TO DETAILING ALL OF THE BUILDING BRACED FRAME JOINTS. THE FABRICATOR IS TO DETAIL THE REMAINING JOINTS ONLY AFTER THIS SUBMITTAL HAS BEEN REVIEWED, APPROVED, AND RETURNED TO THE GENERAL CONTRACTOR.
10. L2, L3, L4& L5 (WHERE OCCURS) INDICATE WELD LENGTHS IN INCHES AS NOTED ON FRAME ELEVATIONS. LU INDICATES MAXIMUM UNBRACED LENGTH OF GUSSET PLATE. SEE 2/SS506 AND OTHER DETAILS THIS SHEET FOR ADDITIONAL INFORMATION

L2	30
L3	33
LU	18

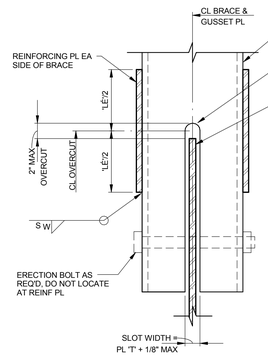

REINF PL SCHEDULE				
HSS	T_{PL}	S_W	L_{PL}	W_{PL}
5x5	3/8"	5/16"	18"	3 1/4"

NOTE:
REINFORCING PLATE MATERIAL TO BE ASTM A36

1/SS505 DETAIL — 3" = 1'-0"

523SD0006-36
SLOT @ RECTANGULAR HSS BRACE

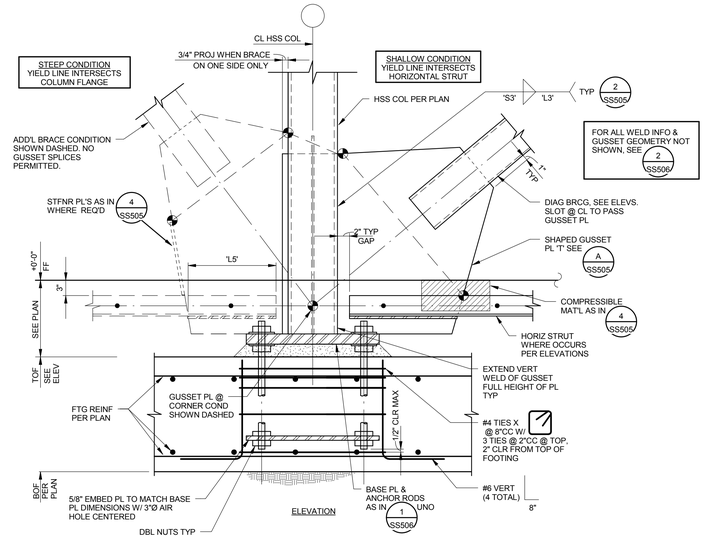

2/SS505 DETAIL — 1" = 1'-0"

523SD0015-12
BRACE TO HSS COL @ BASE

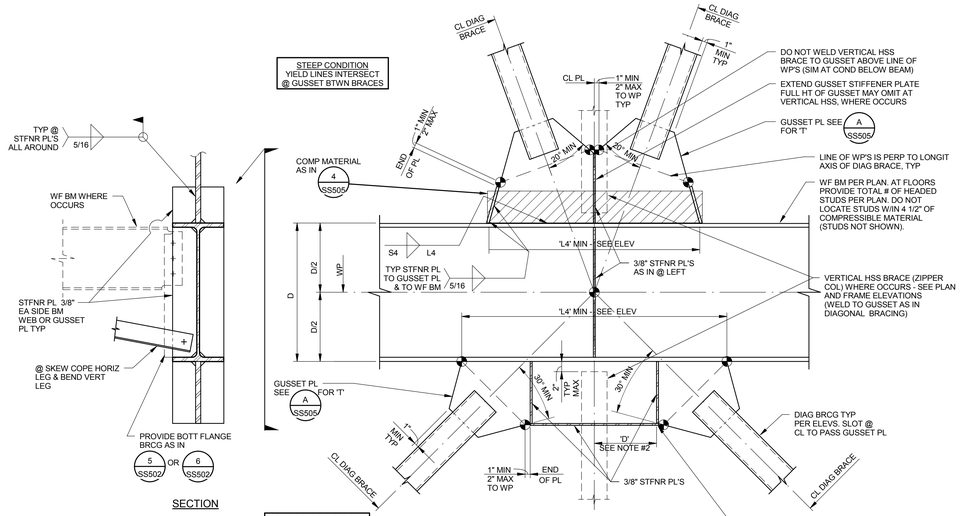

NOTES:
1. DETAIL ALSO APPLIES (SIM) AT CONDITION W/ SLOPING WF BM.
2. WHERE DISTANCE 'D' < 6", A SINGLE 3/8" VERT STFNR PL @ CL GUSSET PL LENGTH MAY BE USED IN LIEU OF THE TWO SHOWN.
3. FOR ALL WELD INFO AND GUSSET GEOMETRY NOT SHOWN, SEE 2/SS506

3/SS505 DETAIL — 1" = 1'-0"

523SD0006-12
BEAM MIDSPAN

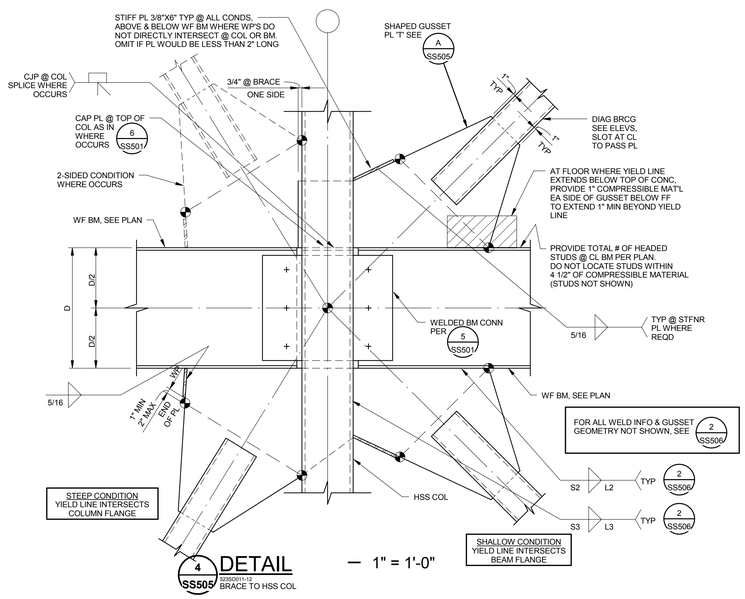

4/SS505 DETAIL — 1" = 1'-0"

523SD0011-12
BRACE TO HSS COL

FINAL BID DOCUMENTS

HILLIARD ARCHITECTS INC. COPYRIGHT

Revisions: | Date

CONSULTANTS:

Buehler & Buehler Structural Engineers, Inc.
5 Third Street, Suite 1125, San Francisco, CA 94103
tel 415.495.1635 fax 415.495.1639
Sacramento · Phoenix · San Francisco

REGISTERED PROFESSIONAL ENGINEER — JOHN D. HARVEY No. 4660 — STRUCTURAL — STATE OF CALIFORNIA

ARCHITECT/ENGINEERS:

ESTABLISHED 1988 HILLIARD ARCHITECTS GOING GREEN

HILLIARD ARCHITECTS, INC
251 Post Street, Suite 620
San Francisco, CA 94108-5017
Tel 415 989 6400, Fax 415 989 3056
www.HilliardArchitects.com

Drawing Title: **SPECIAL CONCENTRIC BRACED FRAME DETAILS**	Project Title: **GENOMICS RESEARCH BUILDING, PALO ALTO**	Project Number: **640-389**	Office of Construction and Facilities Management
Approved: Project Director	Location: VAPAHCS - PALO ALTO	Building Number: **51**	Department of Veterans Affairs
	Date: **06/02/2014** · Checked · Drawn: **BBSE**	Drawing Number: **SS505** Dwg. of	

VA FORM 08-6231

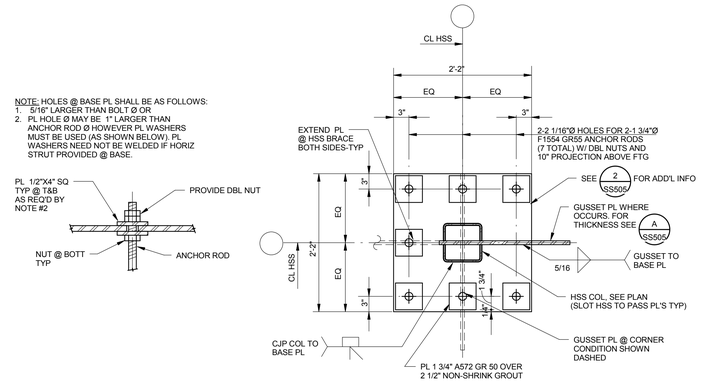

1 SS506 DETAIL 5235D013-8 — 1 1/2"=1'-0"

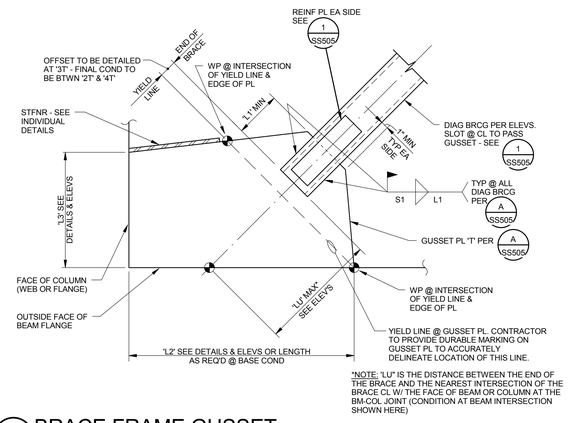

*NOTE: "LU" IS THE DISTANCE BETWEEN THE END OF THE BRACE AND THE NEAREST INTERSECTION OF THE BRACE CL W/ THE FACE OF BEAM OR COLUMN AT THE BM-COL JOINT (CONDITION AT BEAM INTERSECTION SHOWN HERE)

2 SS506 BRACE FRAME GUSSET PL GEOMETRY DETAIL 5235D007-8 — NO SCALE

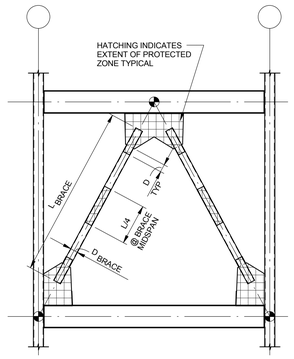

NOTES:
1. PROTECTED ZONES SHALL COMPLY WITH THE REQUIREMENTS OF AISC 341 SECTION 7.4. FABRICATOR SHALL SHOP PAINT PROTECTED ZONES IN A COLOR THAT DOES NOT MATCH ANY OTHER SHOP COATINGS AND PROTECTED ZONES SHALL BE CLEARLY LABELED IN PAINT OR OTHER DURABLE MARKING "PROTECTED ZONE NO ATTACHMENTS ALLOWED IN THIS AREA".
2. DISCONTINUITIES CREATED BY FABRICATION AND/OR ERECTION SHALL BE REPAIRED PER AISC 341 7.4. AND AWSD1.8 6.15.
3. NO WELDED, BOLTED, SCREWED OR SHOT-IN ATTACHMENTS SHALL OCCUR WITHIN PROTECTED ZONES.

3 SS506 PROTECTED ZONES FOR BRACED FRAMES 5235D015-48

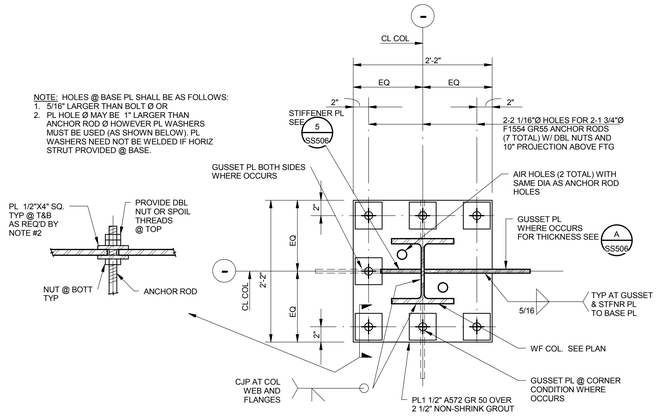

DETAIL 4 SS506 5235D001-8 — 1 1/2"=1'-0"

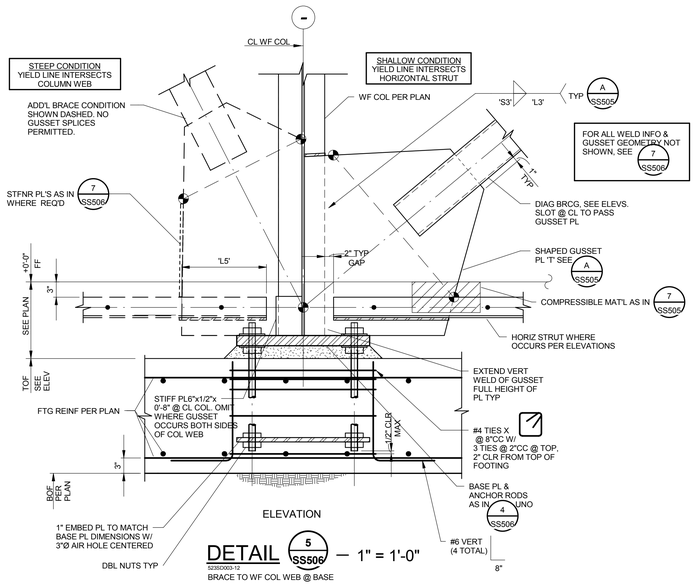

DETAIL 5 SS506 — 1" = 1'-0"
5235D003-12
BRACE TO WF COL WEB @ BASE

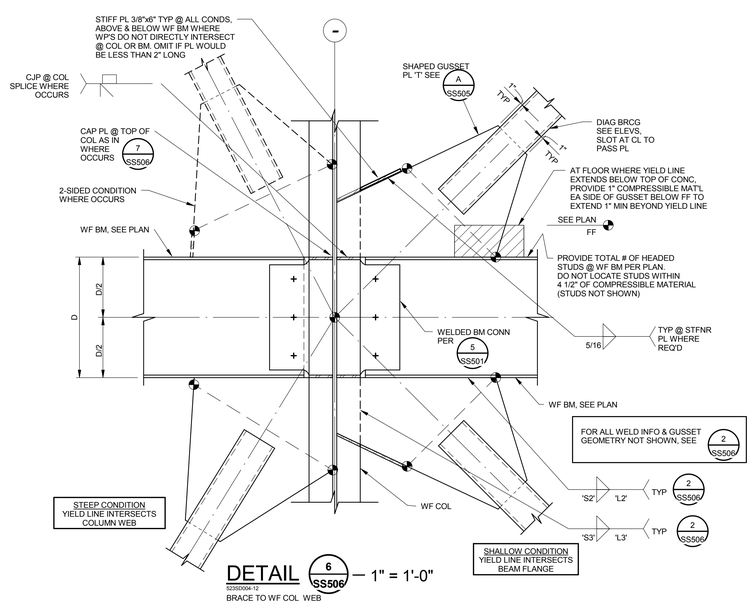

DETAIL 6 SS506 — 1" = 1'-0"
5235D004-12
BRACE TO WF COL WEB

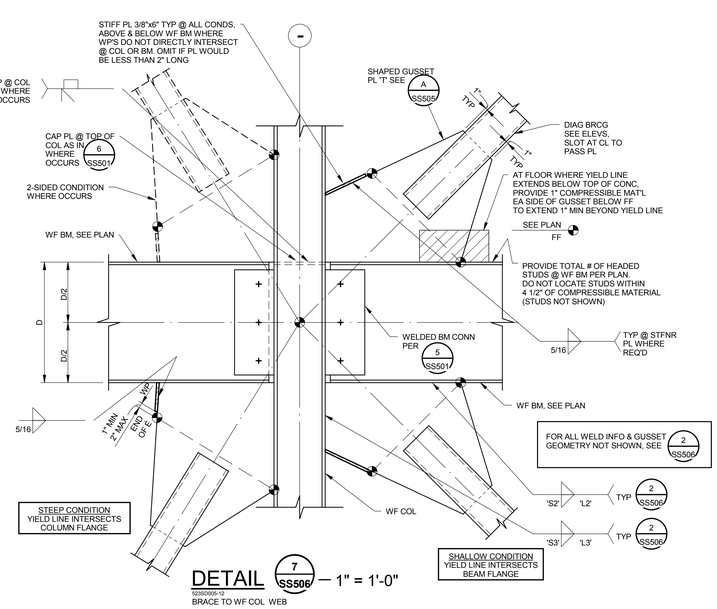

DETAIL 7 SS506 — 1" = 1'-0"
5235D005-12
BRACE TO WF COL WEB

HILLIARD ARCHITECTS INC. COPYRIGHT

FINAL BID DOCUMENTS

Revisions:	Date

CONSULTANTS:

Buehler & Buehler Structural Engineers, Inc.
5 Third Street, Suite 1123, San Francisco, CA 94103
tel 415.495.1635 fax 415.495.1639
Sacramento · Phoenix · San Francisco

REGISTERED PROFESSIONAL ENGINEER — JOHN D. HARVEY No. 4660 — STRUCTURAL — STATE OF CALIFORNIA

ARCHITECT/ENGINEERS:

ESTABLISHED 1988 HILLIARD ARCHITECTS GOING GREEN

HILLIARD ARCHITECTS, INC
251 Post Street, Suite 620
San Francisco, CA 94108-5017
Tel 415 989 6400, Fax 415 989 3056
www.HilliardArchitects.com

Drawing Title	**SPECIAL CONCENTRIC BRACED FRAME DETAILS**
Approved: Project Director	
Project Title	**GENOMICS RESEARCH BUILDING, PALO ALTO**
Location	VAPAHCS - PALO ALTO
Date	*06/02/2014*
Checked	
Drawn	*BBSE*
Project Number	*640-389*
Building Number	*51*
Drawing Number	**SS506**
Dwg. of	

Office of Construction and Facilities Management

Department of Veterans Affairs

VA FORM 08-6231